CITY OF KIRKLAND

FIRE STATION 24
JOB NO. 32-20-PW

GENERAL PROJECT NOTES

1. CONSTRUCTION OF THIS PROJECT SHALL BE IN COMPLIANCE WITH ALL APPLICABLE CODES, ORDINANCES AND REGULATIONS.
2. IT SHALL BE THE RESPONSIBILITY OF THE CONTRACTOR AND EACH SUBCONTRACTOR TO REVIEW, UNDERSTAND AND COORDINATE WORK WITH APPLICABLE CODES, ORDINANCES, REGULATIONS, AND ALL CONTRACT DRAWINGS BEFORE THE INSTALLATION OF THEIR WORK. ANY DISCREPANCY BETWEEN DRAWINGS AND SPECIFICATIONS SHALL BE BROUGHT TO THE ARCHITECT'S ATTENTION FOR CLARIFICATION. ANY WORK INSTALLED IN CONFLICT WITH THE ARCHITECTURAL DOCUMENTS SHALL BE CORRECTED BY THE CONTRACTOR AT HIS OWN EXPENSE AND AT NO EXPENSE TO THE OWNER, ENGINEER OR ARCHITECT.
3. SCHEDULE AND RECEIVE APPROVAL FROM GOVERNING JURISDICTION AND THE ENGINEER FOR ALL UTILITY INTERRUPTIONS IN ADVANCE OF NEEDED DATE. CONTRACTOR IS RESPONSIBLE FOR VERIFYING THE REQUIRED NOTIFICATION TIMES WITH EACH GOVERNING JURISDICTION AND/OR UTILITY.
4. CONTRACTOR SHALL VERIFY SIZES AND LOCATIONS OF ALL OPENINGS FOR MECHANICAL EQUIPMENT, ELECTRICAL EQUIPMENT, OWNER SUPPLIED EQUIPMENT, AND OTHER EQUIPMENT, AS WELL AS SHOP DRAWINGS AS REVIEWED BY ARCHITECT OR ENGINEER BEFORE PROCEEDING WITH WORK.
5. CONTRACTOR SHALL VERIFY/ADJUST SIZES AND LOCATIONS OF ALL EQUIPMENT PADS AND BASES, POWER, WATER AND DRAIN INSTALLATION BEFORE PROCEEDING WITH THE WORK. THIS SHALL OCCUR WITH NO ADDITIONAL COST TO OWNER.
6. PROVIDE BLOCKING BEHIND ALL WALL MOUNTED ACCESSORIES AND MILLWORK AS REQUIRED BY APPLICABLE MANUFACTURER RECOMMENDATIONS, AND AS INDICATED BY ARCHITECT DURING SUBMITTAL PROCESS.
7. ALL PENETRATIONS OF FIRE RESISTIVE WALLS SHALL BE PROTECTED BY MATERIALS AND INSTALLATION DETAILS THAT CONFORM TO UNDERWRITERS LABORATORIES' LISTINGS FOR THROUGH PENETRATION FIRE STOP SYSTEM.
8. CONTRACTOR SHALL CONTACT ARCHITECT PRIOR TO FINAL PLACEMENT OF LIGHT FIXTURES AND DIFFUSERS IN ALL CEILINGS AND WALLS. COORDINATE WITH ELECTRICAL PRIOR TO ACOUSTICAL CEILING GRID INSTALLATION.
9. ALL DIMENSIONS ARE FROM FACE OF CONCRETE MASONRY UNIT, BLOCK OR CENTERLINE OF COLUMNS AND STUDS, UNLESS NOTED OTHERWISE.
10. ALL EXTERIOR WALL & ROOF OPENINGS, FLASHING, COUNTER-FLASHING, EXPANSION JOINTS SHALL BE CONSTRUCTED IN SUCH A MANNER AS TO MAKE THEM WEATHERPROOF AND WATERTIGHT.
11. EACH INSTALLER SHALL BE RESPONSIBLE FOR VERIFICATION AND COORDINATION WITH OTHER INSTALLERS TO SECURE COMPLIANCE OF DRAWING AND SPECIFICATIONS CONCERNING THE ACCURATE LOCATION OF STRUCTURAL MEMBERS AND OPENINGS FOR MECHANICAL, ELECTRICAL AND MISCELLANEOUS EQUIPMENT.
12. DO NOT SCALE DRAWINGS. THE CONTRACTOR SHALL USE DIMENSIONS AS SHOWN AND ACTUAL FIELD MEASUREMENT. NOTIFY ARCHITECT OF ANY DISCREPANCIES.
13. RECYCLING- CONTRACTOR IS ENCOURAGED TO RECYCLE ALL MATERIALS POSSIBLE AND TO USE RECYCLED MATERIALS WHERE SUITABLE. CONTRACTOR SHOULD NOTIFY ARCHITECT OF POTENTIAL RECYCLED MATERIALS WHICH MAY BE APPROPRIATE FOR SUBSTITUTION. REFER TO THE 'DIRECTORY OF RECYCLED CONTENT BUILDING AND CONSTRUCTION PRODUCTS', CLEAN WASHINGTON CENTER, (206) 464-7040.
14. THIS PROJECT HAS UNIT COST(S), SEE SPECIFICATIONS.
15. THIS PROJECT HAS ALTERNATE(S), SEE SPECIFICATIONS
16. THIS PROJECT HAS ALLOWANCE(S), SEE SPECIFICATIONS.
17. THIS PROJECT HAS BIDDER DESIGNED AND INSTALLED FEATURES AS NOTED BELOW, TO BE SUBMITTED AS A DEFERRED SUBMITTAL BY THE CONTRACTOR. THE CONTRACTOR IS RESPONSIBLE FOR APPLYING FOR AND OBTAINING ALL REQUIRED PERMITS. THE CONTRACTOR IS RESPONSIBLE FOR INCLUDING ALL PREPARATION AND PERMIT REVIEW TIME IN THE PROJECT SCHEDULE. THE CONTRACTOR SHALL HIRE ENGINEERS FOR DELEGATED DESIGN AND PROVIDE REQUIRED STAMPED (BY WA STATE LICENSED ENGINEERS) DRAWINGS AND CALCULATIONS. BIDDER DESIGNED & INSTALLED ITEMS INCLUDE:
    - AUTO. SPRINKLER SYSTEM PER NFPA 13, IBC SECTION 903.3.1.1
    - FIRE ALARM SYSTEM PER SPECIFICATIONS AND REQUIREMENTS
    - METAL SHELVING SEISMIC ATTACHMENT.
    - RAMMED AGGREGATE PIERS SOILS IMPROVMENTS.
    - SEISMIC ATTACHMENTS FOR SYSTEMS AS SPECIFIED.
    - FALL PROTECTION SYSTEM
    - ALL DEFERRED SUBMITTALS AS LISTED ON DRAWINGS AND SPECIFICATIONS
18. SYSTEMS COMMISSIONING -
    - IDENTIFICATION MARK SHALL BE APPLIED TO ALL INSULATION MATERIALS AND INSULATION INSTALLED SUCH THAT THE MARK IS READILY OBSERVABLE DURING INSPECTION.
    - ALL HVAC CONTROL SYSTEMS AND OTHER AUTOMATICALLY CONTROLLED SYSTEMS FOR WHICH ENERGY CONSUMPTION PERFORMANCE, OR MODE OF OPERATION ARE REGULATED BY WAC.51-11-1416 SHALL REQUIRE SYSTEMS COMMISSIONING. PRELIMINARY AND FINAL REPORTS SHALL BE IN ACCORDANCE WITH SECTION 1416.4.2.2
    - CLOSOUT DOCUMENTATION SHALL INCLUDE APPLICABLE WSEC ENVELOPE COMPLIANCE FORMS AND CALCULATIONS, AND FENESTRATION NFRC RATING CERTIFICATES
19. PROVIDE FIRE BLOCKING PER 2015 I.B.C. SECTION 718
20. PROVIDE A 2015 WASHINGTON STATE ENERGY CODE (WSEC) COMPLIANT AIR BARRIER INCLUDING BLOWER DOOR TESTING, INSPECTIONS, SEALING AND REPORTS.
21. REFER TO SPECIFICATION SECTION 00 7700 FOR CLOSEOUT PROCEDURES COMPLIANT WITH WSEC C103.6

VICINITY MAP

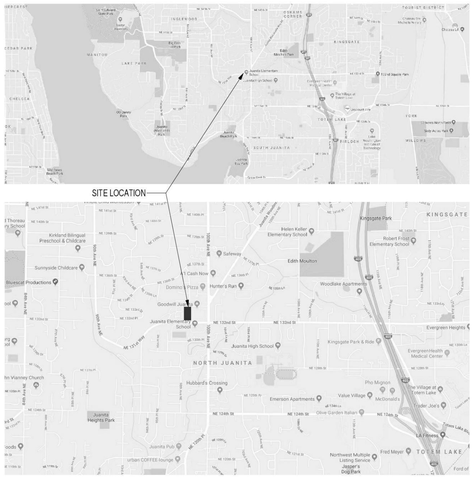

PROJECT INFORMATION

PERMIT NUMBER	TBD
SITE ADDRESS:	9824 NE 132ND STREET, KIRKLAND, WA 98034
PARCEL NUMBER:	192605-9032
LEGAL DESCRIPTION:	W. 242.10 FT. OF E. 710 FT. OF S. 495 FT. OF SE 1/4 LESS CO. RD.
ZONING:	BC 1, COMMERCIAL
LOT AREA BUILDING AREA: TOTAL IMPERVIOUS: LOT COVERAGE:	109,671 SQ. FT. (2.52 ACRES) 11,975 GROSS SQ. FT. 51,325 SQ. FT 46.80 %
PROJECT DESCRIPTION	NEW FIRE STATION 24 AND ASSOCIATED SITE WORK. THE PROPOSED STATION WILL BE STEEL FRAMED STRUCTURE WITH (3) APPARATUS BAYS, SUPPORT SPACES, OFFICES, CREW LIVING SPACES, AND (8) SLEEPING ROOMS.

DRAWING SYMBOLS

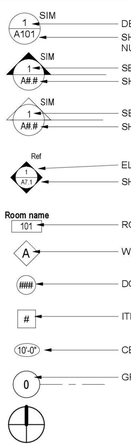

ABBREVIATIONS

&	AND	C.G.	CORNER GUARD	E.	EAST	FTG.	FOOTING	LAB.	LABORATORY	PERP.	PERPENDICULAR	S.	SOUTH	TRD. OR T	TREAD
∠	ANGLE	CH.	CHALK	E.A.	EXPOSED AGGREGATE	FURR.	FURRING	LAM.	LAMINATE	PL.	PLATE	SA	SELF-ADHEARING	TS	TUBE STEEL
@	AT	C.I.	CAST IRON	EA.	EACH	FUT.	FUTURE	LAV.	LAVATORY	P.LAM, PLAM	PLASTIC LAMINATE	SBC	SEATTLE BUILDING CODE	T.V.	TELEVISION
℄	CENTERLINE	C.I.P.	CAST IN PLACE	E.J.	EXPANSION JOINT	F.V.	FIELD VERIFY	LDRY.	LAUNDRY	PLAST.	PLASTER	S.C.	SOLID CORE	T.O.W.	TOP OF WALL
Ø	DIAMETER	C.J.	CONSTRUCTION/CONTROL JOINT	EL.	ELEVATION			LKR.	LOCKER	PLYWD.	PLYWOOD	SCD	SEAT COVER DISPENSER	TYP.	TYPICAL
#	POUND OR NUMBER	C.L.	CENTERLINE	ELEC.	ELECTRICAL	GA.	GAUGE	L.S. / LSCP	LANDSCAPING	PNL.	PANEL	SCHED.	SCHEDULE		
A.B.	ANCHOR BOLT	CLG.	CEILING	ELEV.	ELEVATOR (OR ELEVATION)	GALV.	GALVANIZED	LT.	LIGHT	P.P.	POWER POLE	S.D.	SOAP DISPENSER	UNF.	UNFINISHED
ABV.	ABOVE	CLKG.	CAULKING	EMER.	EMERGENCY	GB.	GRAB BAR			PR.	PAIR	S.DET. / SD	SMOKE DETECTOR	U.N.O.	UNLESS NOTED OTHERWISE
ACOUST.	ACOUSTICAL	CLR.	CLEAR	ENCL.	ENCLOSURE	G.F.I.	GROUND FAULT INTERRUPTER	MAX.	MAXIMUM	PRCST.	PRECAST	SECT.	SECTION	U.O.N.	UNLESS OTHERWISE NOTED
A.D.	AREA DRAIN	CMU.	CONCRETE MASONRY UNIT	E.P.	ELECTRICAL PANEL	GL.	GLASS	M.C.	MEDICINE CABINET	PSL	PARALLEL STRAND LUMBER	SF	SQUARE FOOT	UR.	URINAL
A.C.	ASPHALT CONCRETE	CNTR.	COUNTER	EQ.	EQUAL	GLAM	GLULAM	MECH.	MECHANICAL	P.T.	PRESSURE TREATED	S.G.	SAFETY GLASS		
ACC.	ACCESORY	C.O.	CASED OPENING OR CLEANOUT	EQPT. / EQUIP.	EQUIPMENT	GND.	GROUND	MEMB.	MEMBRANE	PT.	POINT	SH.	SHELF	VAC.	VACUUM
ADJ.	ADJACENT	COL.	COLUMN	ETC.	ET CETERA	GR.	GRADE	MFR.	MANUFACTURE(R)	PTR.	PAINTER	SHT.	SHEET	V.B.	VAPOR BARRIER
ADJUST.	ADJUSTABLE	CORD.	COORDINATION	EVP.	EMERGENCY VEHICLE LIGHT	G.S.	GALVANIZED STEEL	MH.	MANHOLE	PTD	PAPER TOWEL DISPENSER	SHTHG/ SHT'G	SHEATHING	VCR	VINYL CARPET REDUCER
A.F.F.	ABOVE FINISH FLOOR	CONC.	CONCRETE	E.W.C.	ELECTRICAL WATER COOLER	GWB	GYPSUM WALL BOARD	MICRO.	MICROWAVE	PTD/R	COMBINATION PAPER TOWEL DISPENSER & RECEPTACLE	SHWR.	SHOWER	VER	VERIFY
AGGR.	AGGREGATE	CONN.	CONNECTION	EXER.	EXERCISE	GYP.	GYPSUM	MIN.	MINIMUM			SIM.	SIMILAR	VERT.	VERTICAL
AHJ	AUTHORITY HAVING JURISDICTION	CONSTR.	CONSTRUCTION	EX. / EXIST.	EXISTING			MIR.	MIRROR	PTN.	PARTITION	SND	SANITARY NAPKIN DISPENSER	VEST.	VESTIBULE
A.I.B.	AIR INFILTRATION BARRIER	CONT.	CONTINUOUS	EXPO.	EXPOSED	H.B.	HOSE BIBB	MISC.	MISCELLANEOUS	P.T.A.	PAPER TOWEL RECEPTACLE	SNR	SANITARY NAPKIN RECEPTACLE	V.T.O.	VENT TO OUTSIDE
AL / ALUM.	ALUMINUM	CORR.	CORRIDOR	EXP.	EXPANSION	H.C.	HOLLOW CORE	M.O.	MASONRY OPENING	PRE-FIN	PRE-FINISHED	S.M.	SHEET METAL	VTR	VENT THROUGH ROOF
APC	ACOUSTICAL PANEL CEILING	CPT.	CARPET	EXT.	EXTERIOR	HD	HEAD	MTD.	MOUNTED			S.O.G.	SLAB ON GRADE		
APP	APPRATUS	CRB	CRUSHED ROCK BASE			HDR.	HEADER	MTL	METAL	Q.T.	QUARRY TILE	SPEC.	SPECIFICATION	W.	WEST
APPROX.	APPROXIMATE	CTR.	CENTER	F.A.	FIRE ALARM	HDWD.	HARDWOOD	MTRL.	MATERIAL			SQ.	SQUARE	W/	WITH
ARCH.	ARCHITECTURAL OR ARCHITECT	CTSK.	COUNTERSUNK	F.B.	FLAT BAR	HDWR.	HARDWARE	MUL.	MULLION	R.	RISER	S.S.	STAINLESS STEEL	WAC	WASHINGTON STATE ADMINISTRATIVE CODE
ASB.	ASBESTOS	CTV	CABLE TELEVISION	FCB	FIBER COMPOSITE BOARD	H.M.	HOLLOW METAL			RAD.	RADIUS	S.SK.	SERVICE SINK		
ASPH.	ASPHALT			F.D.	FLOOR DRAIN	HORIZ.	HORIZONTAL	N.	NORTH	R.D.	ROOF DRAIN	STA.	STATION	WAB	WEATHER AIR BARRIER (SAME AS WRB)
		D.B.	DOORBELL	FDN.	FOUNDATION	HPL	HIGH PRESSURE LAMINATE	N.I.C.	NOT IN CONTRACT	RECP.	RECEPTACLE	STD.	STANDARD	WRB	WEATHERWATER RESISTIVE BARRIER
BD.	BOARD	DBL.	DOUBLE	F.E.	FIRE EXTINGUISHER	HR.	HOUR	NEC.	NECESSARY	RECEPT.	RECEPTION	STL.	STEEL	W.C.	WATER CLOSET
BITUM.	BITUMINOUS	DEPT.	DEPARTMENT	F.E.C.	FIRE EXTINGUISHER CABINET	H.R.	HANDRAIL	NO.	NUMBER	REF.	REFERENCE	STOR.	STORAGE	WD.	WOOD
BLDG.	BUILDING	DEMO.	DEMOLISH, DEMOLITION	F.F.	FINISH FLOOR	HSS	HOLLOW STRUCTURAL SECTION	NOM.	NOMINAL	REFR.	REFRIGERATOR	STRL. STRUCT.	STRUCTURAL	WDW.	WINDOW
BLK.	BLOCK	D.F.	DRINKING FOUNTAIN	FG	FIBER GLASS	HT.	HEIGHT	N.T.S.	NOT TO SCALE	REINF.	REINFORCED	SUSP.	SUSPENDED	W.M.	WATER METER
BLKG.	BLOCKING	DET./DTL.	DETAIL	F.H.	FIRE HYDRANT					REQ'D	REQUIRED	SYM.	SYMMETRICAL	W/O	WITHOUT
BLW.	BELOW	DIA.	DIAMETER	F.H.C.	FIRE HOSE CABINET	I.B.C.	INTERNATIONAL BUILDING CODE	O.A.	OVERALL	RESIL.	RESILIENT			WP.	WATERPROOF
BM.	BEAM	DIM.	DIMENSION	FIN.	FINISH	I.D.	INSIDE DIAMETER (DIM.)	O.H.	OVERHEAD	RESIST.	RESISTANT	T.B.S.	TO BE SELECTED	W.R.	WATER RESISTANT, WATER-RESISTIVE
BMK.	BENCHMARK	DISP	DISPENSER	FL. / FLR.	FLOOR	IN.	INCH	OBS.	OBSCURE	RM.	ROOM	T.C.	TOP OF CURB	WSCT.	WAINSCOT
BOT.	BOTTOM	DN.	DOWN	FLASH.	FLASHING	INCL.	INCLUDE(D)	O.C.	ON CENTER OUTSIDE	R.O.	ROUGH OPENING	TEL.	TELEPHONE	WT.	WEIGHT
BTWN.	BETWEEN	D.O.	DOOR OPENING	FLUOR.	FLUORESCENT	INSUL.	INSULATION	OCC.	OCCUPANCY	R. & S.	ROD & SHELF	TEMP.	TEMPORARY	WWF	WELDED WIRE FABRIC
		DP.	DEEP	F.O.C.	FACE OF CONCRETE	INT.	INTERIOR	O.D.	DIAMETER (DIM.)	RGSTR.	REGISTER	TER.	TERRAZZO		
CAB.	CABINET	DR.	DOOR	F.O.F.	FACE OF FINISH			OF	OVERFLOW	RSP	RIGID SHEET PANEL	T&G	TONGUE & GROOVE		
C.B.	CATCH BASIN	D.S.	DOWNSPOUT	F.O.S.	FACE OF STUDS	JAN.	JANITOR	OFCI	OWNER FURNISH/ CONTRACTOR INSTALL	RWD.	REDWOOD	THK.	THICK		
CEM.	CEMENT	D.S.P	DRY STANDPIPE	F.P.	FIREPLACE	JST.	JOIST	R.W.L.	RAIN WATER LEADER			T.O.	TOP OF		
CER.	CERAMIC	D.W.	DISHWASHER	FPRF.	FIREPROOF	JT.	JOINT	OFF.	OFFICE			T.P.	TOP OF PAVEMENT		
CERT	COMMUNITY EMERGENCY RESPONSE TEAM	DWG.	DRAWING	FRP	FIBERGLASS REINFORCED PANEL			OPNG	OPENING			TPD	TOILET PAPER DISPENSER		
C.F.M.	CUBIC FEET/MIN.	DWR.	DRAWER	F.S.	FULL SIZE	KIT.	KITCHEN	OPP.	OPPOSITE						
				FT.	FOOT OR FEET			O/	OVER						

CITY OFFICIALS

PENNY SWEET	MAYOR
JAY ARNOLD	DEPUTY MAYOR
NEAL BLACK	COUNCIL MEMBER
KELLI CURTIS	COUNCIL MEMBER
AMY FALCONE	COUNCIL MEMBER
TOBY NIXON	COUNCIL MEMBER
JON PASCAL	COUNCIL MEMBER
KURT TRIPLETT	CITY MANAGER
JULIER UNDERWOOD	PUBLIC WORKS DIRECTOR
ROD STEITZER, PE	CAPITOL PROJECTS MANAGER

CONTACT PERSONNEL

NAME	AGENCY	PHONE
PE NAME, PE	COK PROJECT ENGINEER	425.587.XXXX
CM INSPECTOR NAME	PROJECT INSPECTOR	<PHONE #>
STEVE HOOPES	COK FIELD REPRESENTATIVE	425.623.5086
RICK MAYER	COK FIELD REPRESENTATIVE	206.496.4265
BEN McVITTIE	COK FIELD REPRESENTATIVE	425.410.4606
JEANNE COLEMAN	PUGET SOUND ENERGY (GAS)	425.449.7410
FREMONT AGUINALDO	PUGET SOUND ENERGY (ELECTRICAL)	425.223.0936
JOE FORDON	COMCAST CABLE	425.263.5348
JAY SCHWAB	FRONTIER COMMUNICATIONS	425.263.4019
SCOTT CHRISTENSON	VERIZON BUSINESS	425.471.1079
KELLY NESBITT	NORTHSORE UTILITY DISTRICT	425.398.4431
KEN McDOWELL	WOODINVILLE WATER DISTRICT	425.487.4104
CONST. COORDINATOR	KING COUNTY METRO	206.684.2732
JEFF MILES	LAKE WASH. SCHOOL DISTRICT	425.936.1120
EMERGENCY	NORCOM	911
POLICE MAIN LINE	COK	425.587.3400
FIRE MAIN LINE	COK	425.864.3650
SPILL RESPONSE HOTLINE	COK	425.587.3900
ONE CALL UTILITY LOCATE		800.424.5555

PROJECT TEAM

OWNER:
CITY OF KIRKLAND
123 5TH AVENUE
KIRKLAND, WASHINGTON 98033
PHONE: 425-587-3000
CONTACT: ANNEKE DAVIS

ARCHITECT:
TCA ARCHITECTURE PLANNING
6211 ROOSEVELT WAY NORTHEAST
SEATTLE, WASHINGTON 98115
PHONE: 206-522-3830
CONTACT: FOREST HOOKER

CIVIL ENGINEER
KPFF CONSULTING ENGINEERS
1601 5TH AVENUE #1600
SEATTLE, WASHINGTON 98101
PHONE: 206-622-5822
CONTACT: TOM JONES

STRUCTURAL ENGINEER
COUGHING PORTER LUNDEEN
801 2ND AVENUE #900
SEATTLE, WASHINGTON 98104
PHONE: 206-343-0460
CONTACT: MIKE ARMSTRONG

MECHANICAL ENGINEER
SIDER & BYERS ASSOCIATES INC.
192 NICKERSON STREET #300
SEATTLE, WASHINGTON 98109
PHONE: 206-285-2966
CONTACT: JAMES WHIGHAM

ELECTRICAL ENGINEER
CASE ENGINEERING
19515 NORTH CREEK PARKWAY #302
BOTHELL, WASHINGTON 98011
PHONE: 425-402-9400
CONTACT: JOHN KRITSIS

LANDSCAPE ARCHITECT
AHBL
1200 6TH AVENUE #1620
SEATTLE, WASHINGTON 98101
PHONE: 206-267-2425
CONTACT: CAROLINE TEMPLETON

TRAFFIC
TRANSPO GROUP
12131 113TH AVENUE NE #203
KIRKLAND, WASHINGTON 98034
PHONE: 425-821-3665
CONTACT: JENNIFER PALMER

SURVEYOR
DAVID EVANS AND ASSOCIATES INC.
1620 W. MARINE VIEW DRIVE
SUITE 200
EVERETT, WA 98201
PHONE: 425-405-1513
CONTACT: GIL LAAS

GEOTECHNICAL
HWA GEOSCIENCES INC.
21312 30TH DRIVE SE, SUITE 110
BOTHELL, WA 98021
PHONE: 425-774-0106
CONTACT: BRYAN HAWKINS

ENVELOPE CONSULTANT
RDH BUILDING SCIENCE INC.
2101 N 34TH STREET
SEATTLE, WASHINGTON 98103
PHONE: 206.324.2272
CONTACT: RODNEY LOCK

ACOUSTIC CONSULTANT
SSA ACOUSTICS, LLP
7409 GREENWOOD AVE N., SUITE A
SEATTLE, WASHINGTON 98103
PHONE: 206.839.0819
CONTACT: ALAN BURT

COMMISSIONING AUTHORITY
WELSH COMMISSIONING GROUP, INC.
4508 AUBURN WAY N, SUITE B
AUBURN, WASHINGTON 98002
PHONE: 253.856.3322
CONTACT: BRYAN WELSH

PUBLIC ARTIST
MICHAEL CLAPPER STUDIOS
PHONE: 303.521.2044
CONTACT: MICHAEL CLAPPER

SHEET INDEX

1. TITLE		A2.1	FLOOR PLAN	11. PLUMBING	
T1.1	TITLE SHEET	A2.2	ROOF PLAN	P1.0	COVER SHEET
T1.2	CODE DATA	A3.1	ELEVATIONS	P1.1	SCHEDULES
T1.3	STANDARD ADA CODE SHEET	A3.2	ELEVATIONS	P1.2	SCHEDULES
T1.4	WSEC - ENVELOPE	A4.1	BUILDING SECTIONS	P2.0	FOUNDATION PLAN
		A4.2	BUILDING SECTIONS	P2.1	FLOOR PLAN
2 SURVEY		A5.1	ENLARGED PLANS	P2.2	ROOF PLAN
SU1	TOPOGRAPHIC SURVEY	A5.2	ENLARGED AWNING/ CANOPY PLANS	P3.0	DETAILS
SU2	TOPOGRAPHIC SURVEY	A5.3	AWNING DETAILS	P3.1	DETAILS
		A5.4	CANOPY DETAILS	P3.2	DETAILS
3. CIVIL		A6.1	REFLECTED CEILING PLAN	P3.3	DETAILS
C1.0	COVER SHEET	A7.1	INTERIOR ELEVATIONS	P3.4	DETAILS
C1.1	GENERAL NOTES	A7.2	INTERIOR ELEVATIONS		
C1.2	GENERAL NOTES	A7.3	INTERIOR ELEVATIONS	12. ELECTRICAL	
C2.0	DEMOLITION PLAN	A7.4	INTERIOR ELEVATIONS	E0.1	ELECTRICAL LEGENED AND DRAWING INDEX
C3.0	TESC PLAN	A7.5	INTERIOR ELEVATIONS		
C3.1	TESC DETAILS	A7.6	INTERIOR ELEVATIONS	E0.2	ELECTRICAL ABBREVIATIONS AND NOTES
C4.0	HORIZONTAL CONTROL AND PAVING PLAN	A7.7	INTERIOR ELEVATIONS		
		A7.8	INTERIOR ELEVATIONS	E0.3	MECHANICAL EQUIPMENT CONNECTION SCHEDULE
C4.1	HORIZONTAL CONTROL AND PAVING DETAILS	A8.1	INTERIOR DETAILS		
		A8.2	INTERIOR DETAILS	E0.4	LIGHTING FIXTURE SCHEDULE
C5.0	UTILITY PLAN	A8.3	INTERIOR DETAILS	E0.5	ENERGY FORMS
C6.0	FOUNDATION DRAINAGE PLAN	A8.4	INTERIOR DETAILS	E1.1	ELECTRICAL SITE PLAN
C6.1	FOUNDATION DRAINAGE DETAILS	A9.1	EXTERIOR ENVELOPE TYPES	E1.2	ELECTRICAL SITE LIGHTING PLAN
C7.0	GRADING, & DRAINAGE PLAN	A9.2	INTERIOR PARTITIONS	E2.1	1ST FLOOR POWER PLAN
C7.0A	GRADING, & DRAINAGE PLAN - BID ALTERNATE DETENTION VAULT	A9.3	DOOR, STOREFRONT & FRAME TYPES	E2.2	ROOF POWER PLAN
		A9.4	DOOR SCHEDULE & FINISH SCHEDULE	E3.1	1ST FLOOR LIGHTING PLAN
C7.1	DETENTION POND SECTION AND DETAILS	A9.5	ENLARGED FLASHING AND THRESHOLD DETAILS	E4.1	1ST FLOOR MECHANICAL POWER PLAN
C7.1A	BID ALTERNATE DETENTION VAULT DETAILS	A9.6	INTERIOR DOOR/ WINDOW DETAILS	E4.2	ROOF MECHANICAL POWER PLAN
C7.2	PLAZA, SIDEWALK, AND ENCLOSURE GRADING DETAIL	A9.7	EXTERIOR WINDOW DETAILS	E5.1	1ST FLOOR TELECOM AND SECURITY PLAN
		A9.8	EXTERIOR STOREFRONT DETAILS	E6.1	1ST FLOOR ALERTING PLAN
C7.3	WATER QUALITY TREATMENT DETAIL - BIOPOD BIOFILTER	A9.9	EXTERIOR DOOR DETAILS	E7.1	1ST FLOOR FIRE ALARM PLAN
		A10.1	FLASHING DIAGRAMS	E8.1	ENLARGED PLANS, ELECTRICAL DETAILS
C8.0	NE 132ND STREET PLAN & PROFILE	A10.2	EXTERIOR DETAILS		
C8.1	NE 132ND STREET PLAN & PROFILE	A10.3	EXTERIOR DETAILS	E8.2	TELECOMMUNICATIONS ENLARGED PLAN AND DETAILS
C8.2	NE 132ND STREET PLAN & PROFILE	A10.4	EXTERIOR DETAILS		
C8.3	NE 132ND STREET PLAN & PROFILE	A10.5	EXTERIOR DETAILS	E8.3	TELECOMMUNICATIONS DETAILS
C8.4	NE 132ND STREET SECTION AND DETAILS			E8.4	TELECOMMUNICATIONS DETAILS
		9. STRUCUTURAL		E8.5	ELECTRICAL DETAILS
C8.5	NE 132ND STREET SECTION AND DETAILS	S1.1	GENERAL STRUCTURAL NOTES	E9.1	ONE LINE DIAGRAM
		S1.2	GENERAL STRUCTURAL NOTES	E10.1	PANEL SCHEDULES
4. VAULT		S1.3	GENERAL STRUCTURAL NOTES	E10.2	PANEL SCHEDULES
VS0.1	DETENTION VAULT STRUCTURAL NOTES AND DRAWING LIST	S2.1	FOUNDATION PLAN	EL1.2	SITE LIGHTING CALCULATION PLAN
		S2.2	ROOF FRAMING PLAN	EL3.1	ENERGY LIGHTING CALCULATION PLAN
VS0.2	STATEMENT OF SPECIAL INSPECTIONS	S2.3	EQUIPMENT ENCLOSURE & MECH'L SCREEN PLAN		
VS1.0	DETENTION VAULT FOUNDATION AND FRAMING PLANS	S3.1	TYPICAL CONCRETE DETAILS		
VS4.0	DETENTION VAULT DETAILS	S3.2	CONCRETE DETAILS		
VS4.1	DETENTION VAULT DETAILS	S3.3	CONCRETE DETAILS		
		S3.4	BRACED FRAME FOUNDATION DETAILS		
5. UTILITIES		S5.1	TYPICAL METAL DECK DETAILS		
UT1.0	COVER SHEET	S5.2	TYPICAL STEEL DETAILS		
UT1.1	GENERAL NOTES	S5.3	TYPICAL STEEL DETAILS		
UT2.0	WATER UTILITY PLAN	S5.4	STEEL DETAILS		
UT3.0	SEWER UTILITY PLAN	S5.5	JOIST DETAILS		
		S5.6	ROOF FRAMING DETAILS		
6. TRAFFIC		S5.7	CANOPY STEEL DETAILS		
TS01	TRAFFIC SIGNAL NOTES AND LEGENDS	S5.8	MISC. STEEL DETAILS		
		S6.1	BRACED FRAME ELEVATIONS		
TS02	TRAFFIC SIGNAL PLAN	S6.2	BRACED FRAME DETAILS		
TS03	TRAFFIC SIGNAL FIELD WIRE TERMINATIONS	S6.3	BRACED FRAME DETAILS		
		S7.1	TYPICAL METAL STUD DETAILS		
TS04	TRAFFIC SIGNAL DETAILS				
TS05	TRAFFIC SIGNAL POLE CHART	10. MECHANICAL			
		M1.0	COVER SHEET		
7. LANDSCAPE		M1.1	SCHEDULES		
L1.0	PLANTING PLAN	M1.2	SCHEDULES		
L1.1	PLANTING PLAN - BID ALTERNATE AND PLANT SCHEDULE	M1.3	SCHEDULES		
		M1.4	SEQUENCE OF OPERATIONS		
L1.2	LANDSCAPE DETAILS	M2.1	MECHANICAL FLOOR PLAN		
L2.0	IRRIGATION PLAN	M2.2	MECHANICAL ROOF PLAN		
L2.1	IRRIGATION DETAILS	M2.3	MECHANICAL CEILING PLAN		
L2.2	IRRIGATION NOTES	M2.4	SECTIONS		
		M2.5	SECTIONS		
8. ARCHITECTURE		M3.1	DETAILS		
A1.1	SITE PLAN	M3.2	DETAILS		
A1.2	ENLARGED SITE PLANS	M3.3	DETAILS		
A1.3	SITE DETAILS	M3.4	DETAILS		
A1.4	SITE DETAILS	M4.1	VRF DIAGRAM		

TCA
ARCHITECTURE + PLANNING + DESIGN
6211 ROOSEVELT WAY NORTHEAST
SEATTLE, WA 98115
tel: (206) 522-3830
fax: (206) 522-2456

6235 REGISTERED ARCHITECT
BRIAN J. HARRIS
STATE OF WASHINGTON

July 21, 2020

BID SET

No.	Description	Date:

Project Title:

Fire Station 24
City of Kirkland
Kirkland, Washington

Sheet Title:

TITLE SHEET

Scale: NONE
Project No. : 16-46
Date : July 21, 2020

Sheet Number :

T1.1

C:\Users\joel\Documents\16-46 Kirkland 24_CENTRAL.x_joel@tca-inc.com.rv

CONSTRUCTION REQUIREMENTS

CODES: 2015 IBC, IFC, IMC W/ WASHINGTON STATE AMENDMENTS & ICC A117.1-2009
UPC W/ WASHINGTON STATE AMENDMENTS
CITY OF KIRKLAND AMENDMENTS
WASHINGTON STATE ADMINISTRATIVE CODE (WAC)
2015 WASHINGTON STATE ENERGY CODE

DESIGN EXPOSURE: WIND SPEED: 115 MPH.
EXPOSURE B
SEISMIC DESIGN CATEGORY: D
RISK CATEGORY: IV

FIRE PROTECTION: AUTOMATIC FIRE-EXTINGUISHING SYSTEM, FULLY SPRINKLERED

FIRE ALARM SYSTEM: AUTOMATIC FIRE ALARM SYSTEM

CONSTRUCTION TYPE: TYPE VB, SPRINKLERED
IBC SECTION 602
THIS BUILDING COMPLIES WITH IBC 508.3 NON-SEPARATED OCCUPANCIES

FIRE RESISTIVE RATINGS (IBC TABLE 601)

BUILDING ELEMENT (>10' SEPARATION)	*TYPE V-B SPRINKLERED*
STRUCTURAL FRAME	0 HOUR
BEARING WALLS	
EXTERIOR	0 HOUR
INTERIOR	0 HOUR
NON BEARING WALLS AND PARTITIONS	
EXTERIOR	0 HOUR
INTERIOR	0 HOUR
FLOOR CONSTRUCTION	0 HOUR
ROOF CONSTRUCTION	0 HOUR

SEPARATION AND RATED CONSTRUCTION REQUIREMENTS
1HR SEPARATION BETWEEN APPARATUS AREA AND SLEEPING AREA REQUIRED PER WAC 296-305-06507. AN IBC FIRE BARRIER IS USED TO MEET THIS REQUIREMENT.

1/2 HR FIRE PARTITION BETWEEN SLEEPING (IBC 420.2 AND 708.3 WITH AUTO SPRINKLER SYSTEM)

INCIDENTAL USES (IBC TABLE 509)
NONE

FLOOR AREA RATIO:
FLOOR AREA: 11,975 SF
SPACES W/ CEILINGS GREATER THAN 16'-0": 4,783 SF
GROSS FLOOR AREA: 16,731 SF
LOT AREA: 109,671 SF
FAR: 15.3%

OCCUPANCY & EGRESS REQUIREMENTS

OCCUPANCY TYPES: B, R-3, S-1, S-2

ALLOWABLE AREA: 42,750 SF (IBC TABLE 506.2)
USING OCC GROUP B AS MOST RESTRICTIVE

ACTUAL BLDG AREA: 11,975 SF TOTAL

ALLOWABLE HEIGHT: 60 FT (IBC TABLE 504.3)
USING OCC. GROUP R AS MOST RESTRICTIVE
35 FT (KIRKLAND MUNICIPAL CODE 35.10.030.6.b)
USING ZONING AS MOST RESTRICTIVE

ACTUAL BLDG HEIGHT: 24.0 FT

ALLOWABLE STORIES: 2 (IBC TABLE 504.4)
USING OCC GROUP S-1 AS MOST RESTRICTIVE

ACTUAL BLDG STORIES: 1

INTERIOR WALL AND CEILING FINISH REQUIREMENTS (IBC TABLE 803.11)

OCC GROUP	EXIT PASSAGEWAYS	CORRIDORS & ENCLOSURE FOR EXIT ACCESS	ROOMS & ENCLOSED SPACES
R-3	C	C	C
S	C	C	C
B	B	C	C

MINIMUM CORRIDOR WIDTH (IBC TABLE 1020.2)
OCC LOAD LESS THAN 50 FOR EACH OCC GROUP **36"**

MINIMUM EXITS REQUIRED BY OCCUPANT LOAD (IBC CHAPTER 1006.2)

	OCCUPANT LOAD	EXITS REQUIRED	EXITS PROVIDED
OCC GROUP B	56	2	2
OCC GROUP R-3	8	1	1
OCC GROUP S-1,S-2	30	1	1

COMMON PATH OF EGRESS (IBC TABLE 1006.2.1)
OCC GROUP B **100 FT**
OCC GROUP R-3 **125 FT**
OCC GROUP S-1,S-2 **100 FT**

EXIT ACCESS TRAVEL DISTANCE (IBC TABLE 1017.2)
OCC GROUP R, S-1 **250 FT**
OCC GROUP B **300 FT**
OCC GROUP S-2 **400 FT**

DEAD END (IBC 1020.4.2):
OCC GROUP R-3 **20 FT**
OCC GROUP B, S-1, S-2 **50 FT**

OCCUPANT LOAD

OCCUPANCY TYPE	OCCUPANCY GROUP	AREA	OLF	OCCUPANT LOAD
T.O. SLAB				
B	BUSINESS	3976 SF	100	40
B	EXERCISE	557 SF	50	12
R-3	RESIDENTIAL	651 SF	200	4
R-3	RESIDENTIAL	646 SF	200	4
S-1	STORAGE	938 SF	300	4
S-1	STORAGE	184 SF	300	1
S-2	PARKING GARAGE	4720 SF	200	24
S-2	ELECTRICAL	222 SF	300	1
S-2	MECHANICAL	81 SF	300	1
TOTAL OCCUPANTS				91

ACCESSIBILITY NOTE
THE FIREFIGHTER KITCHEN AND TOILET/SHOWERS ARE DESIGNED TO BE ADAPTABLE FOR FUTURE ADA COMPLIANCE. THE KITCHEN COUNTER HAS BEEN DESIGNED FOR FUTURE LOWERING TO PROVIDE AN ADA COMPLIANT SINK AND WORKSPACE. BLOCKING WILL BE INSTALLED AT SHOWERS FOR THE FUTURE INSTALLATIONS OF ADA COMPLIANT GRAB BARS AND SEATS. THE ADAPTABLE APPROACH IS CONSISTENT WITH THE DEPARTMENT OF JUSTICE'S "GUIDANCE ON 2010 STANDARDS "TITLE II" (PAGE 15) WHICH IS SPECIFIC TO THE RESIDENTIAL NATURE OF THE FIRE STATIONS.

PLUMBING FIXTURES

PLUMBING FIXTURE SUMMARY - IBC CHAPTER 29

OCC. GROUP	OCC. TYPE	AREA (SF)	OLF	OCC. LOAD	WC MALE RATIO	WC MALE	WC FEMALE RATIO	WC FEMALE FM	LAV MALE RATIO	LAV MALE	LAV FEMALE RATIO	LAV FEMALE FM
PARKING GARAGE	S-2	4720 SF	200	24	100	0.12	100	0.12	100	0.12	100	0.12
STORAGE	S-1	938 SF	300	4	100	0.02	100	0.02	100	0.02	100	0.02
BUSINESS	B	3976 SF	100	40	25	0.8	25	0.80	40	0.50	40	0.50
RESIDENTIAL	R-3	651 SF	200	4								
RESIDENTIAL	R-3	646 SF	200	4								
ELECTRICAL	S-2	222 SF	300	1	100	0.01	100	0.01	100	0.01	100	0.01
MECHANICAL	S-2	81 SF	300	1	100	0.01	100	0.01	100	0.01	100	0.01
STORAGE	S-1	184 SF	300	1	100	0.01	100	0.01	100	0.01	100	0.01
EXERCISE	B	557 SF	50	12	25	0.24	25	0.24	40	0.15	40	0.15
TOTAL:						1.2		1.20		0.81		0.81

PLUMBING FIXTURE REQUIREMENTS (WAC 51-50-2900 AMENDMENT TO IBC CHAPTER 29)

	REQUIRED	PROVIDED
WATER CLOSETS	4	7
LAVATORIES	2	7

DRINKING FOUNTAIN (WAC 2902.5)

	REQUIRED 1 HI/LOW	PROVIDED 1 HI/LOW
DRINKING FOUNTAIN		
BOTTLE FILLING STATION	0	1

LEGEND

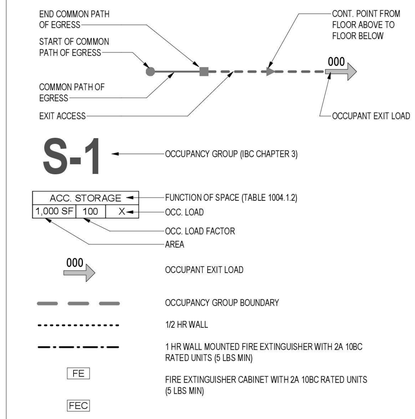

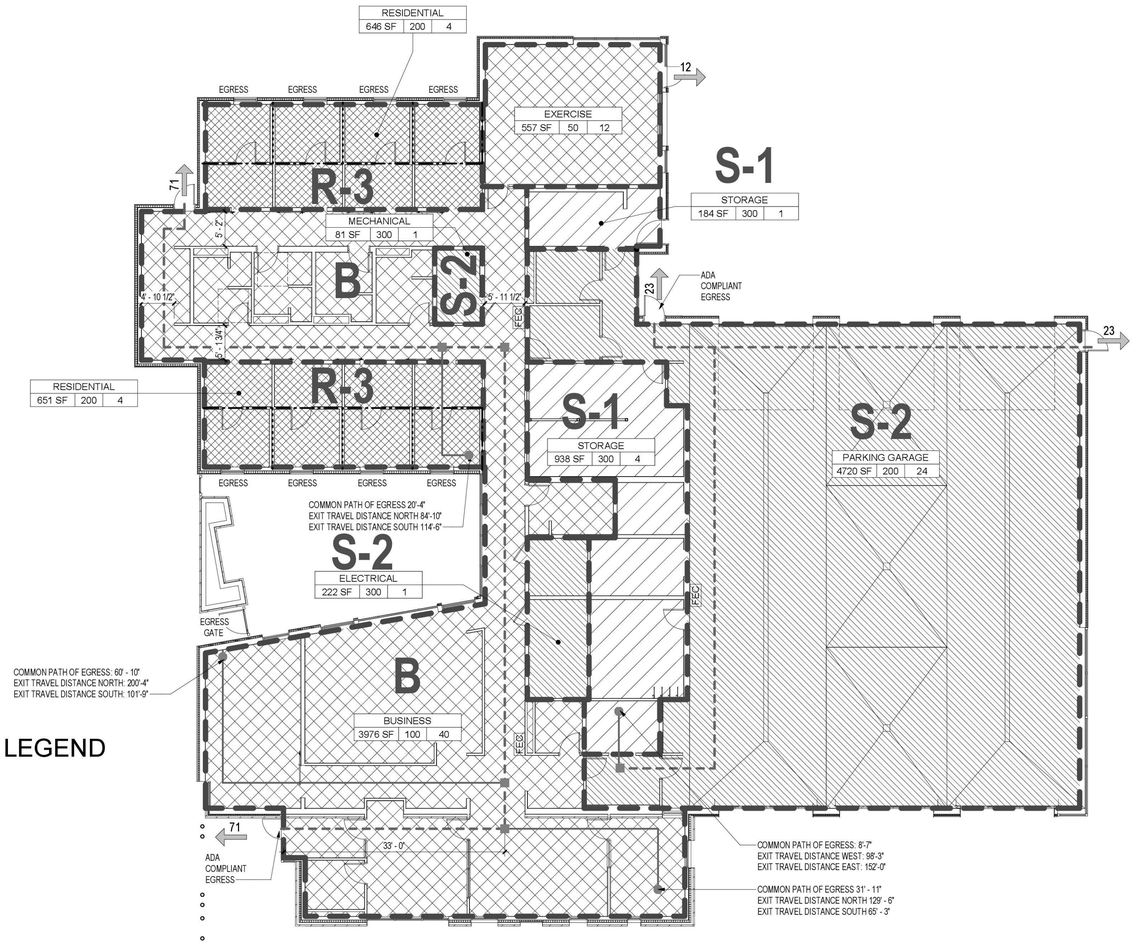

CODE LEGEND

- B
- R-3
- S-1
- S-2

1 CODE PLAN
Scale: 3/32" = 1'-0"

0 10' 20'
3/32" = 1"

TCA
ARCHITECTURE + PLANNING + DESIGN
6211 ROOSEVELT WAY NORTHEAST
SEATTLE, WA 98115
tel: (206) 522-3830
fax: (206) 522-2456
6235 REGISTERED ARCHITECT
BRIAN J. HARRIS
STATE OF WASHINGTON

July 21, 2020

BID SET

No.	Description	Date:

Project Title:

Fire Station 24
City of Kirkland
Kirkland, Washington

Sheet Title:

CODE DATA

Scale: **As indicated**
Project No. : **16-46**
Date : **July 21, 2020**
Sheet Number :

T1.2

C:\Users\joel\Documents\16-46 Kirkland 24_CENTRALx_joel@tca-inc.com.rvt

Provided to Builders Exchange of WA, Inc. For usage Conditions Agreement see www.bxwa.com - Always Verify Scal

CODE REQUIRED SIGNAGE

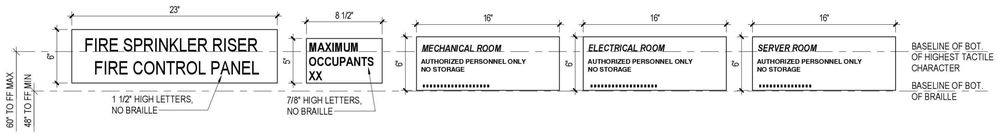

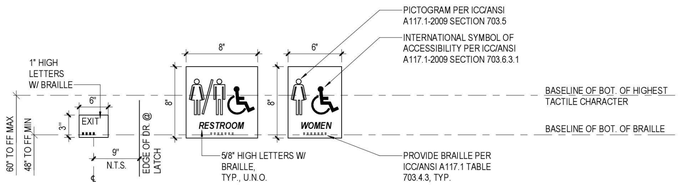

ROOM SIGNS & EXIT EGRESS SIGNS:

1. SIGNS TO COMPLY WITH *ICC/ANSI 117.1-2009* AND *2015 IBC SECTION 1013 AND 1111.*
2. TACTILE SIGNAGE IS TO BE LOCATED NO LESS THAN 48" ABOVE THE FLOOR MEASURE TO THE BASELINE OF THE LOWEST RAISED CHARACTER AND NO MORE THAN 60" ABOVE FINISH FLOOR MEASURED TO THE BASELINE OF THE HIGH RAISED CHARACTER. TACTILE SIGNAGE TO BE LOCATED ON THE LATCH SIDE OF DOOR WHEN EVER POSSIBLE. REFER ALSO TO INTERIOR ELEVATIONS FOR LOCATIONS OF SIGNAGE.
3. CHARACTERS AND THEIR BACKGROUND, AND PICTOGRAM AND THEIR FIELD SHALL HAVE A NON-GLARE FINISH. CHARACTERS AND PICTOGRAMS SHALL HAVE A HIGH CONTRAST WITH THEIR BACKGROUND OR FIELD.
4. A SIGN STATING "EXIT" IN VISUAL CHARACTERS, RAISED CHARACTERS, AND BRAILLE, SHALL BE ADJACENT TO EACH DOOR TO AN *AREA OF REFUGE*, AN EXTERIOR AREA FOR ASSISTED RESCUE, AN *EXIT STAIRWAY OR RAMP*, AN *EXIT PASSAGEWAY* AND THE *EXIT DISCHARGE*. PER *2015 IBC SECTION 1013.4.*
5. ADA SIGNAGE W/ INTERNATIONAL ACCESSIBILITY SYMBOL SHALL HAVE WHITE CHARACTERS, SYMBOLS, BRAILLE AND LETTERS ON A BLUE BACKGROUND.
6. VERIFY OCCUPANT LOAD PRIOR TO FABRICATION.

DOOR CLEARANCES (PER *ICC/ANSI A117.1-2009*)

404.2.2 CLEAR WIDTH: DOORWAYS SHALL HAVE A CLEAR OPENING WIDTH OF 32 INCHES (815 MM) MINIMUM.

404.2.6 DOOR HARDWARE: HANDLES, PULLS, LATCHES, LOCKS, AND OTHER OPERABLE PARTS ON ACCESSIBLE DOORS SHALL HAVE A SHAPE THAT IS EASY TO GRASP WITH ONE HAND AND DOES NOT REQUIRE TIGHT GRASPING, PINCHING, OR TWISTING OF THE WRIST TO OPERATE. OPERABLE PARTS OF SUCH HARDWARE SHALL BE 34 INCHES (856 MM) MINIMUM AND 48 INCHES (1220 MM) MAXIMUM ABOVE THE FLOOR. WHERE SLIDING DOORS ARE IN THE FULLY OPEN POSITION, OPERATING HARDWARE SHALL BE EXPOSED AND USABLE FROM BOTH SIDES.

404.2.7 CLOSING SPEEDS: DOOR CLOSERS SHALL BE ADJUSTED SO THAT FROM AN OPEN POSITION OF 90 DEGREES, THE TIME REQUIRED TO MOVE THE DOOR TO AN OPEN POSITION OF 12 DEGREES SHALL BE 5 SECONDS MINIMUM.

404.2.8 DOOR-OPENING FORCE: FIRE DOORS SHALL HAVE THE MINIMUM OPENING FORCE ALLOWABLE BY THE APPROPRIATE ADMINISTRATIVE AUTHORITY. THE FORCE FOR PUSHING OR PULLING DOORS OTHER THAN FIRE DOORS SHALL BE AS FOLLOWS:
5.0 POUNDS (22.2 N) MAXIMUM

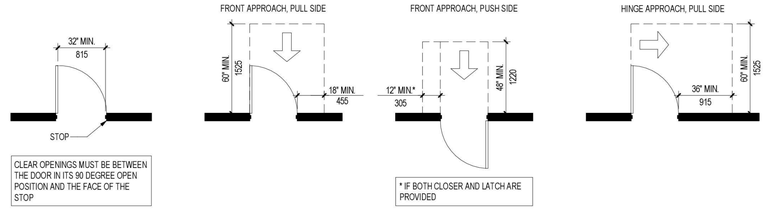

ICC/ANSI TABLE 404.2.3.2-MANEUVERING CLEARANCES AT MANUAL SWINGING DOORS

TYPE OF USE		MANEUVERING CLEARANCES AT DOORS	
APPROACH DIRECTION	DOOR SIDE	PERPENDICULAR TO DOORWAY	PARALLEL TO DOORWAY (BEYOND LATCH UNLESS NOTED)
FROM FRONT	PULL	60 INCHES (1525 MM)	18 INCHES (455 MM)
FROM FRONT	PUSH	48 INCHES (1220 MM)	0 INCHES (0 MM)[3]
FROM HINGE SIDE	PULL	60 INCHES (1525 MM)	36 INCHES (915 MM)
FROM HINGE SIDE	PULL	54 INCHES (1370 MM)	42 INCHES (1065 MM)
FROM HINGE SIDE	PUSH	42 INCHES (1065 MM)[1]	22 INCHES (560 MM)[3&4]
FROM LATCH SIDE	PULL	48 INCHES (1220 MM)[1]	24 INCHES (610 MM)
FROM LATCH SIDE	PUSH	42 INCHES (1065 MM)[2]	24 INCHES (610 MM)

[1]ADD 6 INCHES (150 MM) IF CLOSER AND LATCH PROVIDED.
[2]ADD 6 INCHES (150 MM) IF CLOSER PROVIDED.
[3]ADD 12 INCHES (305 MM) BEYOND LATCH IF CLOSER AND LATCH PROVIDED.
[4]BEYOND HINGE SIDE.

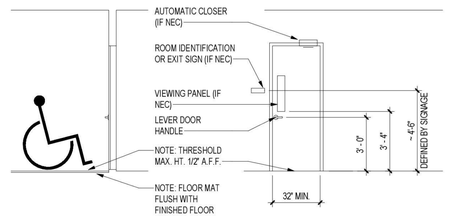

TYPICAL ACCESSIBLE MOUNTING HEIGHTS (PER *IBC CHAPTER 11* AND *ICC/ANSI A117.1-2009*)

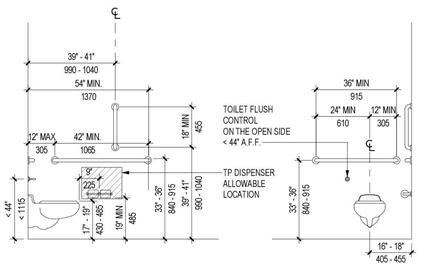

WALL MOUNTED TOILET ADA GRAB BARS AND TOILET PAPER HOLDER

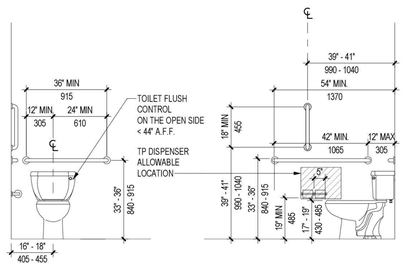

FLOOR MOUNTED TOILET ADA GRAB BARS AND TOILET PAPER HOLDER

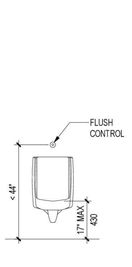

WALL HUNG URINAL

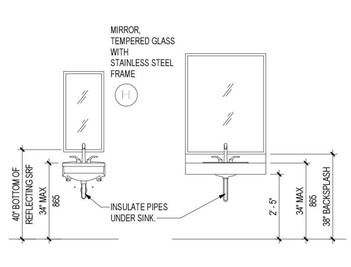

WALL HUNG SINK

LAVATORY

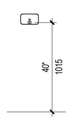

SOAP DISP.

SANITARY NAPKIN
DISPOSAL

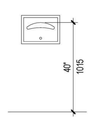

TOILET SEAT COVER
DISPENSER

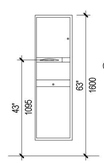

PAPER TOWEL DISP /
WASTE RECEPTACLE

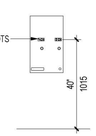

SURFACE MOUNTED
SANITARY NAPKIN
VENDOR

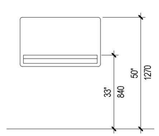

SURFACE MOUNTED DIAPER CHANGING
STATION

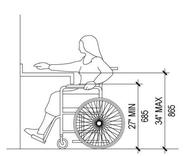

COUNTERTOP

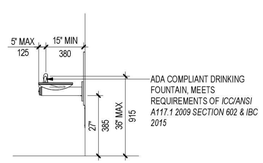

DRINKING FOUNTAIN

ACCESSIBLE TOILET AND BATHING ROOMS NOTES

GENERAL. ACCESSIBLE TOILET AND BATHING ROOMS SHALL COMPLY WITH *ICC/ANSI CHAPTER 6 PLUMBING ELEMENTS AND FACILITIES* AND *IBC 2015 CHAPTER 12.*

603.2 CLEARANCES.
603.2.1 TURNING SPACE. A TURNING SPACE COMPLYING WITH SECTION 304 SHALL BE PROVIDED WITHIN THE ROOM. THE REQUIRED TURNING SPACE SHALL NOT BE PROVIDED WITHIN THE TOILET COMPARTMENT.

603.2.3 DOOR SWING. DOORS SHALL NOT SWING INTO THE CLEAR FLOOR SPACE OR CLEARANCE FOR ANY FIXTURE.
EXCEPTIONS:
1. DOORS TO A TOILET OR BATHING ROOM FOR A SINGLE OCCUPANT, ACCESSED ONLY THROUGH A PRIVATE OFFICE AND NOT FOR COMMON USE OR PUBLIC USE SHALL BE PERMITTED TO SWING INTO THE CLEAR FLOOR SPACE, PROVIDED THE SWING TO THE DOOR CAN BE REVERSED TO COMPLY WITH SECTION 603.2.2.
2. WHERE THE ROOM IS FOR INDIVIDUAL USE AND A CLEAR FLOOR SPACE COMPLYING WITH SECTION 305.3 IS PROVIDED WITHIN THE ROOM BEYOND THE ARC OR THE DOOR SWING, THE DOOR SHALL NOT BE REQUIRED TO COMPLY WITH SECTION 603.2.2.

603.3 MIRRORS. WHERE MIRRORS ARE LOCATED ABOVE LAVATORIES, A MIRROR SHALL BE LOCATED OVER THE ACCESSIBLE LAVATORY AND SHALL BE MOUNTED WITH THE BOTTOM EDGE OF THE REFLECTING SURFACE 40 INCHES (1015 MM) MAXIMUM ABOVE THE FLOOR. WHERE MIRRORS ARE LOCATED ABOVE COUNTERS THAT DO NOT CONTAIN LAVATORIES, THE MIRROR HALL BE MOUNTED WITH THE BOTTOM EDGE OF THE REFLECTING SURFACE 40 INCHES (1015 MM) MAXIMUM ABOVE THE FLOOR.

603.4 COAT HOOKS AND SHELVES. COAT HOOKS SHALL BE LOCATED WITHIN ONE OF THE REACH RANGES SPECIFIED IN SECTION 308. SHELVES SHALL BE 40 INCHES (1015 MM) MINIMUM AND 48 INCHES (1220 MM) MAXIMUM ABOVE THE FLOORS.

603.6 OPERABLE PARTS. OPERABLE PARTS ON TOWEL DISPENSERS AND HAND DRYERS SERVING ACCESSIBLE LAVATORIES SHALL COMPLY WITH IBC TABLE 603.6

IBC TABLE 603.6 MAXIMUM REACH DEPTH AND HEIGHT

MAXIMUM REACH DEPTH	0.5 INCH (13 MM)	2 INCHES (51 MM)	5 INCHES (125 MM)	6 INCHES (150 MM)	9 INCHES (230 MM)	11 INCHES (280 MM)
MAXIMUM REACH HEIGHT	48 INCHES (1220 MM)	46 INCHES (1170 MM)	42 INCHES (1065 MM)	40 INCHES (1015 MM)	36 INCHES (915 MM)	34 INCHES (865 MM)

TCA
ARCHITECTURE + PLANNING + DESIGN
6211 ROOSEVELT WAY
NORTHEAST
SEATTLE, WA 98115
tel: (206) 522-3830
fax: (206) 522-2456
6235 REGISTERED ARCHITECT
BRIAN J. HARRIS
STATE OF WASHINGTON

July 21, 2020

BID SET

No.	Description	Date:

Project Title:

Fire Station 24
City of Kirkland
Kirkland, Washington

Sheet Title:

STANDARD ADA CODE SHEET

Scale: **As indicated**
Project No. : **16-46**
Date : **July 21, 2020**

Sheet Number :

T1.3

C:\Users\joel\Documents\16-46 Kirkland 24_CENTRAL>_joel@tca-inc.com.rvt

Provided to Builders Exchange of WA, Inc. For usage Conditions Agreement see www.bxwa.com - Always Verify Scal

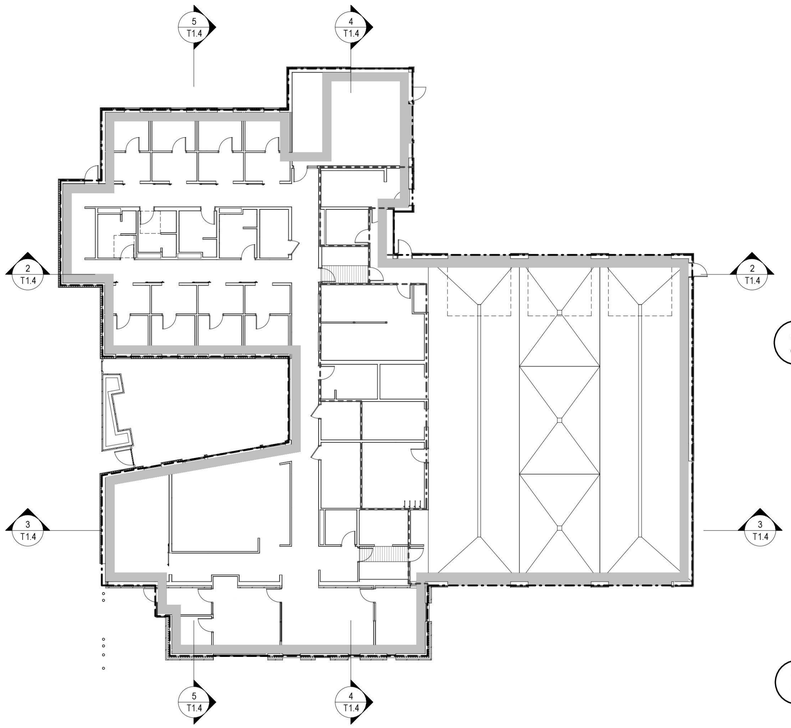

1 THERMAL DIAGRAM - FLOOR PLAN
Scale: 1/16" = 1'-0"

2 THERMAL DIAGRAM - E/W SECTION 1
Scale: 1/16" = 1'-0"

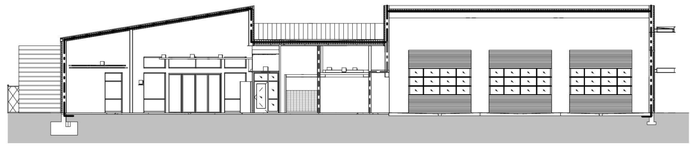

3 THERMAL DIAGRAM - E/W SECTION 2
Scale: 1/16" = 1'-0"

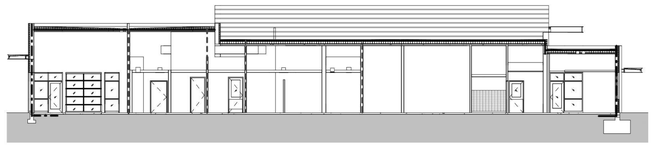

4 THERMAL DIAGRAM - N/S SECTION1
Scale: 1/16" = 1'-0"

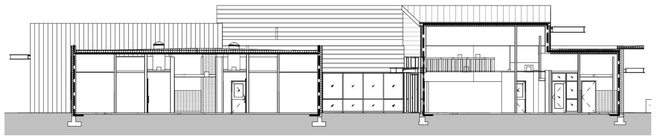

5 THERMAL DIAGRAM - N/S SECTION 1
Scale: 1/16" = 1'-0"

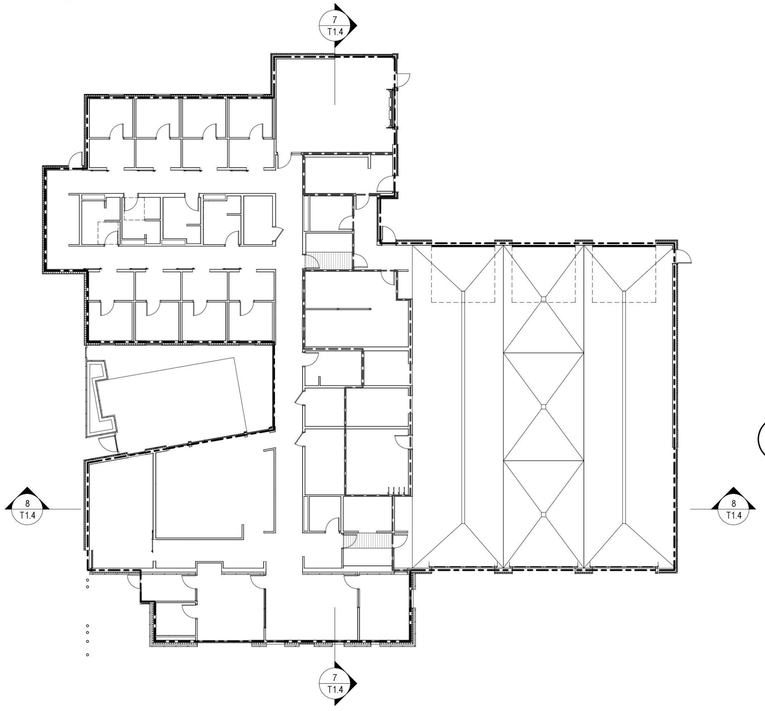

6 AIR BARRIER DIAGRAM - FLOOR PLAN
Scale: 1/16" = 1'-0"

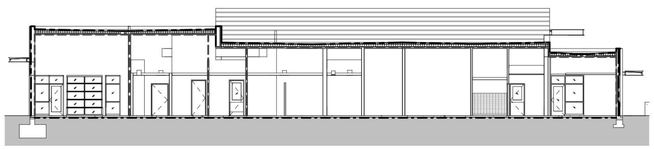

7 AIR BARRIER DIAGRAM - N/S SECTION
Scale: 1/16" = 1'-0"

8 AIR BARRIER DIAGRAM - E/W SECTION
Scale: 1/16" = 1'-0"

GENERAL ENERGY EFFICIENCY REQUIREMENTS

CLIMATE ZONE (WSEC TABLE 301.1): 4C KING

ENVELOPE COMPLIANCE PATH: C402.1.5 COMPONENT PERFORMANCE ALTERNATIVE

GENERAL NOTES

1. BUILDING ENVELOPE AIR BARRIER REQUIREMENTS AND COMPLIANCE:
   - A. PROVIDE A CONTINUOUS AIR BARRIER COMPLIANT WITH 2015 WSEC C402.5.1.
   - B. PROVIDE AIR BARRIER COMPLIANCE TESTING AND REPORTS PURSUANT TO 2015 WSEC C402.5.1.2 (BLOWER DOOR TEST). PROVIDE AIR BARRIER TEST REPORT TO JURISDICTION ONCE TEST IS COMPLETED.
   - C. SHOULD LEAKAGE RATES EXCEED 0.4 CFM/FT2 AT 0.3 IN WG (CODE LIMITS), PROVIDE INSPECTION, ADDITIONAL SEALING AND REPORTS AS REQUIRED BY 2015 WSEC C402.5.1.2
   - D. SUBMIT A FOLLOW-UP REPORT TO JURISDICTION NOTING CORRECTIVE MEASURES TAKEN
   - E. INCLUDE AIR BARRIER TEST REPORT IN COMPLIANCE DOCUMENTATION PROVIDED TO OWNER
2. INSTALL VAPOR BARRIER TO UNDERSIDE OF ROOF DECK. WHERE VAPOR BARRIER IS EXPOSED USE FIRE RATED VAPOR BARRIER.
3. INTERIOR AIR BARRIER REQUIREMENTS AND COMPLIANCE:
   - A. EXTEND GWB ON ONE SIDE OF WALL TO UNDERSIDE OF DECK. SEAL GWB AT TOP AND BOTTOM AND JOINTS.
   - B. USE UNFACED BATT INSULATION.
   - C. SEAL ALL PENETRATIONS WITH AIR BARRIER SEALANT
4. AN R-VALUE IDENTIFICATION MARK SHALL BE APPLIED BY THE MFR TO EACH PIECE OF THE BUILDING THERMAL ENVELOPE INSULATION 12" OR GREATER IN WIDTH. ALTERNATELY, THE INSULATION INSTALLER SHALL PROVIDE A CERTIFICATION LISTING THE TYPE, MFR AND R-VALUE OF INSULATION INSTALLED IN EACH ELEMENT OF THE BUILDING THERMAL ENVELOPE, KEPT IN A CONSPICUOUS LOCATION ON THE JOB SITE. AT BLOWN OR SPRAYED ROOF/CLG INSULATION PROVIDE INSULATION MARKERS PER 2015 WSEC C303.1.1.1.

THERMAL DIAGRAM LEGEND	AIR BARRIER DIAGRAM LEGEND
ROOF: R-40 RIGID	EXT. WEATHER AIR BARRIER
EXT. 10" WALL: R-30 BATT + R10 CI	INTERIOR VAPOR BARRIER
EXT. 6" WALL: R-21 BATT + R20 CI	SLAB VAPOR BARRIER
INT. WALL: R-19 BATT	
INT. WALL: R-30 BATT	
SLAB: 24" R-10 RIGID	

TCA
ARCHITECTURE + PLANNING + DESIGN
6211 ROOSEVELT WAY NORTHEAST
SEATTLE, WA 98115
tel: (206) 522-3830
fax: (206) 522-2456

6235 REGISTERED ARCHITECT
BRIAN J. HARRIS
STATE OF WASHINGTON

July 21, 2020

BID SET

No.	Description	Date:

Project Title:

Fire Station 24
City of Kirkland
Kirkland, Washington

Sheet Title:

WSEC - ENVELOPE

Scale: As indicated
Project No. : 16-46
Date : July 21, 2020

Sheet Number :

T1.4

C:\Users\joel\Documents\16-46 Kirkland 24_CENTRALx_joel@tca-inc.com.rvt

Provided to Builders Exchange of WA, Inc. For usage Conditions Agreement see www.bxwa.com - Always Verify Scal

FIRE STATION 24

9824 NE 132ND STREET

KIRKLAND, WA 98034

SURVEY INFORMATION
SURVEY BY: DAVID EVANS AND ASSOCIATES, INC.
DATED: AUGUST 30, 2019

BASIS OF BEARING

THE SOUTHEAST LINE OF SECTION 19 AS BEING NORTH 88° 50'43" WEST PER ZEE LANE SHORT PLAT A.F.# 20150723900005.

VERTICAL DATUM

ELEVATIONS SHOWN HEREON ARE GEOID-DERIVED NAVD88, GEOID 12B SEPARATIONS WERE APPLIED TO SOLVED ELLIPSOID HEIGHTS.

SITE BENCHMARK: CITY OF KIRKLAND CONTROL POINT NO. 133, LOCATED IN THE NORTHWEST QUADRANT OF THE INTERSECTION OF NE 100TH AVE AND NE 132ND ST, ELEVATION: 115.25 U.S. SURVEY FEET

SHEET INDEX	
SHEET NO	SHEET TITLE
C1.0	COVER SHEET
C1.1	GENERAL NOTES
C1.2	GENERAL NOTES
C2.0	DEMOLITION PLAN
C3.0	TESC PLAN
C3.1	TESC DETAILS
C4.0	HORIZONTAL CONTROL AND PAVING PLAN
C4.1	HORIZONTAL CONTROL AND PAVING DETAILS
C5.0	UTILITY PLAN
C6.0	FOUNDATION DRAINAGE PLAN
C6.1	FOUNDATION DRAINAGE DETAILS
C7.0	GRADING AND DRAINAGE PLAN
C7.1	DETENTION POND SECTION AND DETAILS
C7.0A	GRADING AND DRAINAGE PLAN – BID ALTERNATE DETENTION VAULT
C7.1A	BID ALTERNATE DETENTION VAULT DETAILS
C7.2	PLAZA, SIDEWALK, AND ENCLOSURE GRADING DETAIL
C7.3	WATER QUALITY TREATMENT DETAIL – BIOPOD BIOFILTER
C8.0–C8.3	NE 132ND STREET PLAN & PROFILE
C8.4–C8.5	NE 132ND STREET SECTION AND DETAILS

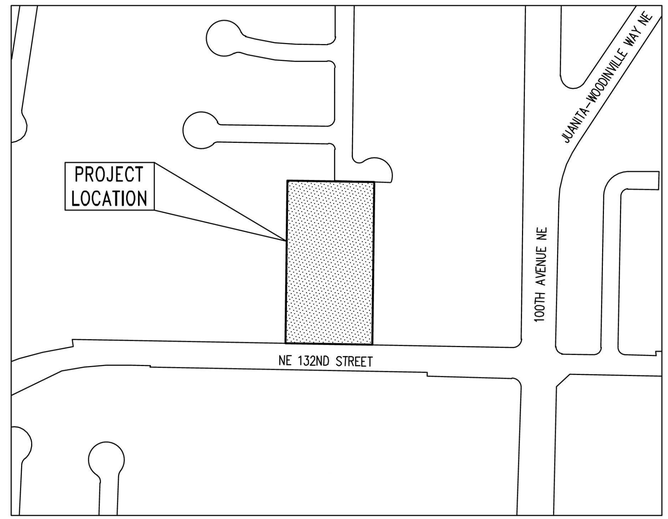

VICINITY MAP
SCALE: 1" = 200'±

PROJECT TEAM

OWNER
CITY OF KIRKLAND
123 5TH AVENUE
KIRKLAND, WA 98033
ANNEKE DAVIS, PE
(425) 587-3828
adavis@kirklandwa.gov

CIVIL ENGINEER
KPFF CONSULTING ENGINEERS
1601 FIFTH AVENUE, SUITE 1600
SEATTLE, WA 98101
(206) 622-5822
TOM JONES
tom.jones@kpff.com

ARCHITECT
TCA ARCHITECTURE PLANNING
6211 ROOSEVELT WAY NE
SEATTLE, WA 98115
(206) 522-3830
FOREST HOOKER
forest@tca-inc.com

SURVEYOR
DAVID EVANS AND ASSOCIATES INC.
1620 W MARINE VIEW DRIVE
EVERETT, WA 98201
(425) 405-1513
GIL LAAS, PLS
gjla@deainc.com

GEOTECHNICAL
HWA GEOSCIENCES INC
21312 30TH DRIVE SE, SUITE 110
BOTHLL, WA 98021
(425) 774-0106
BRYAN HAWKINS, PE
bhawkins@hwageo.com

LANDSCAPE
AHBL INC
1206 6TH AVENUE, SUITE 1620
SEATTLE, WA 98101
(206) 267-2425
MEREDITH SESSIONS
msessions@ahbl.com

SERVICE PROVIDERS:

WATER
NORTHSHORE UTILITY DISTRICT
6830 NE 185TH STREET
KENMORE, WA 98028
(425) 398-4400

SEWER
NORTHSHORE UTILITY DISTRICT
6830 NE 185TH STREET
KENMORE, WA 98028
(425) 398-4400

STORM
CITY OF KIRKLAND
123 5TH AVENUE
KIRKLAND, WA 98033
(425) 587-3800

POWER
PUGET SOUND ENERGY
10885 NE 47TH STREET, SUITE 1200
PO BOX 97034
BELLEVUE, WA 98009
(425) 454-6363
(888) 225-5773

GAS
PUGET SOUND ENERGY
10885 NE 47TH STREET, SUITE 1200
PO BOX 97034
BELLEVUE, WA 98009
(425) 454-6363
(888) 225-5773

SURVEY LEGEND

FOUND IRON ROD AS NOTED	●
FOUND MONUMENT AS NOTED	⊕
WATER TONE LINE	———
SANITARY SEWER LINE	———
OVERHEAD UTILITY LINE	———
POWER TONE LINE	———
GAS TONE LINE	———
TELEPHONE TONE LINE	———
TRAFFIC SIGNAL BOX	TS
ELECTRICAL BOX	E
WATER VAULT	W
ELECTRIC GROUND ROD	●
STORM DRAIN MANHOLE	Ⓓ
SEWER MANHOLE	Ⓢ
CATCH BASIN	
SIGN	
STREET LIGHT	
GUY ANCHOR	
UTILITY POLE	
WATER VALVE	WV
WATER METER	WM
GAS METER	GM
FIRE HYDRANT	
CURB & GUTTER	C&G
EXTRUDED CURB	EC
EXTRUDED CURB	EC
ELECTRICAL TRANSFORMER	
BOLLARD	●
MAILBOX	
FIRE DEPARTMENT CONNECTION	FDC
AREA DRAIN	
AREA LIGHT	
CONIFEROUS TREE	

CONTRACTOR IS ALERTED TO THE FACT THAT WORK WILL BE ACCOMPLISHED AROUND ACTIVE PSE GAS AND ENERGIZED ELECTRICAL FACILITIES THAT ARE SERVING EXISTING CUSTOMERS. CONTRACTOR SHALL COORDINATE WITH PSE TO DETERMINE WHICH FACILITIES ARE ACTIVE AND ENERGIZED AND SHALL IMPLEMENT SAFETY PROCEDURES PER PSE REQUIREMENTS. CONTRACTOR SHALL COORDINATE WITH PSE TO ENSURE THAT FACILITIES ARE IN PLACE TO MAINTAIN SERVICE TO CUSTOMERS THROUGHOUT CONSTRUCTION.

811 Call 811 two business days before you dig

TCA
ARCHITECTURE + PLANNING + DESIGN
6211 ROOSEVELT WAY NORTHEAST
SEATTLE, WA 98115
tel: (206) 522-3830
fax: (206) 522-2456

kpff
1601 5th Avenue, Suite 1600
Seattle, WA 98101
206.622.5822
www.kpff.com

JEREMY S. FRIES
STATE OF WASHINGTON
39847
REGISTERED PROFESSIONAL ENGINEER
7/20/2020

BID SET

No.	Description	Date

Project Title:

FIRE STATION 24
City of Kirkland
Kirkland, Washington

Sheet Title:

COVER SHEET

Scale: **AS NOTED**
Project No. **1700011**
Date : **JULY 21, 2020**

Sheet Number :

C1.0

Jul 20, 2020 - 12:19pm lareaod
Z:\1700001-1700999\1700011 (Kirkland Fire Sta 24)\CAD\Design\CD\C1.00KFS-24 CVR.dwg

Provided to Builders Exchange of WA, Inc. For usage Conditions Agreement see www.bxwa.com - Always Verify Scal

GENERAL CONSTRUCTION NOTES

1. ALL WORK SHALL CONFORM TO THE CURRENT EDITION OF NORTHSHORE UTILITY DISTRICT STANDARD PLANS AND SPECIFICATIONS, CURRENT EDITION OF CITY OF KIRKLAND PRE-APPROVED PLANS AND THE CURRENT EDITION OF WSDOT STANDARD SPECIFICATIONS. A COPY OF THESE DOCUMENTS SHALL BE ON SITE DURING CONSTRUCTION.
2. A COPY OF THE APPROVED PLAN MUST BE ON SITE WHENEVER CONSTRUCTION IS IN PROGRESS.
3. ERRORS AND OMISSIONS ON THE PERMITTED PLANS MUST BE CORRECTED BY THE ENGINEER AND APPROVED BY THE CITY OF KIRKLAND.
4. ALL PERMITS REQUIRED FOR WORK MUST BE OBTAINED PRIOR TO THE START OF CONSTRUCTION.
5. PRIOR TO THE START OF CONSTRUCTION , THE CONTRACTOR SHALL SCHEDULE AND ATTEND A PRECONSTRUCTION MEETING WITH THE CITY OF KIRKLAND.
6. ALL DAMAGE TO CITY INFRASTRUCTURE CAUSED BY THE CONSTRUCTION SHALL BE IMMEDIATELY REPORTED AND REPAIRED AS REQUIRED BY THE CITY OF KIRKLAND.
7. DATUM: NAVD 88.
8. SURVEYING AND STAKING OF ALL IMPROVEMENTS SHALL BE COMPLETED PRIOR TO CONSTRUCTION.
9. THE CONTRACTOR SHALL BE RESPONSIBLE FOR REFERENCING AND REPLACING ALL MONUMENTS THAT MAY BE DISTURBED, DESTROYED OR REMOVED BY THE PROJECT AND SHALL FILE AN APPLICATION FOR PERMIT TO REMOVE OR DESTROY A SURVEY MONUMENT WITH THE WASHINGTON STATE DEPARTMENT OF NATURAL RESOURCES, PURSUANT TO RCW 58.24.040(8).
10. THE CONTRACTOR SHALL LOCATE AND PROTECT ALL CASTINGS AND UTILITIES DURING CONSTRUCTION.
11. THE CONTRACTOR SHALL CONTACT THE UNDERGROUND UTILITIES LOCATOR SERVICE (1-800-424-5555) AT LEAST 48 HOURS PRIOR TO CONSTRUCTION.
12. IT IS THE SOLE RESPONSIBILITY OF THE CONTRACTOR TO VERIFY THE ACCURACY OF ALL UTILITY LOCATIONS SHOWN AND TO FURTHER DISCOVER AND AVOID ANY OTHER UTILITIES NOT SHOWN WHICH MAY BE AFFECTED BY THE IMPLEMENTATION OF THIS PLAN.
13. THE CONTRACTOR SHALL ADJUST ALL EXISTING MANHOLE RIMS, DRAINAGE STRUCTURE LIDS, VALVE BOXES, AND UTILITY ACCESS STRUCTURES TO FINISH GRADE WITHIN AREAS AFFECTED BY THE PROPOSED IMPROVEMENTS.
14. THE CONTRACTOR SHALL PROVIDE FOR ALL TESTING AS REQUIRED BY PROJECT OWNER.
15. INSPECTION AND ACCEPTANCE OF ALL WORK SHALL BE DONE BY REPRESENTATIVES OF OWNER. IT SHALL BE THE CONTRACTOR'S RESPONSIBILITY TO COORDINATE AND SCHEDULE APPROPRIATE INSPECTIONS ALLOWING FOR PROPER ADVANCE NOTICE. THE OWNER MAY REQUIRE REMOVAL AND RECONSTRUCTION OF ANY ITEMS PLACED THAT DO NOT MEET STANDARDS AND SPECIFICATIONS OR THAT WERE CONSTRUCTED WITHOUT APPROPRIATE INSPECTIONS.
16. THE CONTRACTOR SHALL PROVIDE A PLAN FOR STORMWATER AND EROSION CONTROL AND INSTALL, MAINTAIN AND REMOVE TEMPORARY FACILITIES FOR CONSTRUCTION ACTIVITIES. AS CONSTRUCTION PROGRESSES AND CONDITIONS DICTATE, ADDITIONAL CONTROL FACILITIES MAY BE REQUIRED. DURING THE COURSE OF CONSTRUCTION IT SHALL BE THE OBLIGATION AND RESPONSIBILITY OF THE CONTRACTOR TO ADDRESS ANY NEW CONDITIONS THAT MAY BE CREATED BY THE CONTRACTOR'S ACTIVITIES AND TO PROVIDE ADDITIONAL FACILITIES THAT MAY BE NEEDED TO PROTECT ADJACENT PROPERTIES.
17. ALL TRAFFIC CONTROL SHALL BE IN ACCORDANCE WITH THE CITY OF KIRKLAND STANDARDS. AN APPROVED TRAFFIC CONTROL PLAN WILL BE REQUIRED FOR ALL ARTERIAL STREETS PRIOR TO BEGINNING CONSTRUCTION.
18. ALL WORK PERFORMED BY UTILITY PURVEYORS TO REPAIR, REMOVE OR RELOCATE EXISTING UTILITIES SHALL BE DONE AT THE CONTRACTOR'S EXPENSE.
19. CARE SHALL BE EXERCISED WHEN EXCAVATING OR REMOVING PAVEMENT NEAR EXISTING CHARGED WATER MAINS. CAST IRON WATER MAINS ARE KNOWN TO BE SENSITIVE TO EXCESSIVE VIBRATION. COORDINATE PROTECTION METHODS WITH NORTHSHORE UTILITY DISTRICT.

CITY OF KIRKLAND TESC PLAN NOTES

1. THE APPROVED CONSTRUCTION SEQUENCE SHALL BE AS FOLLOWS:
   - A. CONDUCT PRE-CONSTRUCTION MEETING.
   - B. FLAG OR FENCE CLEARING LIMITS.
   - C. POST SIGN WITH NAME AND PHONE NUMBER OF TESC SUPERVISOR.
   - D. INSTALL CATCH BASIN PROTECTION DOWNSTREAM AND AS DETERMINED BY THE CITY INSPECTOR.
   - E. GRADE AND INSTALL CONSTRUCTION ENTRANCE(S).
   - F. INSTALL PERIMETER PROTECTION (SILT FENCE, BRUSH BARRIER, ETC.).
   - G. CONSTRUCT SEDIMENT PONDS AND TRAPS.
   - H. GRADE AND STABILIZE CONSTRUCTION ROADS.
   - I. CONSTRUCT SURFACE WATER CONTROLS (INTERCEPTOR DIKES, PIPE SLOPE DRAINS, ETC.) SIMULTANEOUSLY WITH CLEARING AND GRADING FOR PROJECT DEVELOPMENT.
   - J. MAINTAIN EROSION CONTROL MEASURE IN ACCORDANCE WITH CITY OF KIRKLAND STANDARDS AND MANUFACTURER'S RECOMMENDATIONS.
   - K. RELOCATE EROSION CONTROL MEASURES OR INSTALL NEW MEASURES SO THAT AS SITE CONDITIONS CHANGE, THE EROSION AND SEDIMENT CONTROL IS ALWAYS IN ACCORDANCE WITH THE CITY TESC MINIMUM REQUIREMENTS.
   - L. COVER ALL AREAS WITHIN THE SPECIFIED TIME FRAME WITH STRAW, WOOD FIBER MULCH, COMPOST, PLASTIC SHEETING, CRUSHED ROCK OR EQUIVALENT.
   - M. STABILIZE ALL AREAS THAT REACH FINAL GRADE WITHIN 7 DAYS.
   - N. SEED OR SOD ANY AREAS TO REMAIN UNWORKED FOR MORE THAN 30 DAYS.
   - O. UPON COMPLETION OF THE PROJECT, ALL DISTURBED AREAS MUST BE STABILIZED AND BEST MANAGEMENT PRACTICES REMOVED IF APPROPRIATE.
2. CONTRACTOR IS RESPONSIBLE FOR KEEPING STREETS CLEAN AND FREE OF CONTAMINANTS AT ALL TIMES AND FOR PREVENTING AN ILLICIT DISCHARGE (KMC 15.52) INTO THE MUNICIPAL STORM DRAIN SYSTEM. IF YOUR CONSTRUCTION PROJECT CAUSES AN ILLICIT DISCHARGE TO THE MUNICIPAL STORM DRAIN SYSTEM, THE CITY OF KIRKLAND STORM MAINTENANCE DIVISION WILL BE CALLED TO CLEAN THE PUBLIC STORM SYSTEM, AND OTHER AFFECTED PUBLIC INFRASTRUCTURE. THE CONTRACTOR(S), PROPERTY OWNER, AND ANY OTHER RESPONSIBLE PARTY MAY BE CHARGED ALL COSTS ASSOCIATED WITH THE CLEAN-UP AND MAY ALSO BE ASSESSED MONETARY PENALTIES (KMC 1.12.200). THE MINIMUM PENALTY IS $500. A FINE FOR A REPEAT VIOLATION SHALL BE A MULTIPLIED BY THE NUMBER OF VIOLATIONS. A FINE MAY BE REDUCED OR WAIVED FOR PERSONS WHO IMMEDIATELY SELF-REPORT VIOLATION TO THE CITY AT 425-587-3900. A FINAL INSPECTION OF YOUR PROJECT WILL NOT BE GRANTED UNTIL ALL COSTS ASSOCIATED WITH THE CLEAN-UP, AND PENALTIES, ARE PAID TO THE CITY OF KIRKLAND.
3. CONSTRUCTION DEWATERING DISCHARGES SHALL ALWAYS MEET WATER QUALITY GUIDELINES LISTED INVCOK POLICY E-1. SPECIFICALLY, DISCHARGES TO THE PUBLIC STORMWATER DRAINAGE SYSTEM MUST BE BELOW 25 NTU, AND NOT CONSIDERED AN ILLICIT DISCHARGE (PER KMC 15.52.090). TEMPORARY DISCHARGES TO SANITARY SEWER REQUIRE PRIOR AUTHORIZATION AND PERMIT FROM KING COUNTY INDUSTRIAL WASTE PROGRAM (206-263-3000) AND NOTIFICATION TO THE PUBLIC WORKS CONSTRUCTION INSPECTOR.
4. ALL WORK AND MATERIALS SHALL BE IN ACCORDANCE WITH CITY OF KIRKLAND STANDARDS AND SPECIFICATIONS.
5. THE BOUNDARIES OF THE CLEARING LIMITS SHOWN ON THIS PLAN SHALL BE SET BY SURVEY AND CLEARLY FLAGGED IN THE FIELD BY A CLEARING CONTROL FENCE PRIOR TO CONSTRUCTION. DURING THE CONSTRUCTION PERIOD, NO DISTURBANCE OR REMOVAL OF ANY GROUND COVER BEYOND THE FLAGGED CLEARING LIMITS SHALL BE PERMITTED. THE FLAGGING SHALL BE MAINTAINED BY THE PERMITTEE/CONTRACTOR FOR THE DURATION OF CONSTRUCTION.
6. APPROVAL OF THIS EROSION/SEDIMENTATION CONTROL (ESC) PLAN DOES NOT CONSTITUTE AN APPROVAL OF PERMANENT ROAD OR DRAINAGE DESIGN (E.G., SIZE AND LOCATION OF ROADS, PIPES, RESTRICTORS, CHANNELS, RETENTION FACILITIES, UTILITIES, ETC.).
7. THE IMPLEMENTATION OF THIS ESC PLAN AND THE CONSTRUCTION, MAINTENANCE, REPLACEMENT, AND UPGRADING OF THESE ESC FACILITIES IS THE RESPONSIBILITY OF THE PERMITTEE/CONTRACTOR UNTIL ALL CONSTRUCTION IS APPROVED.
8. A COPY OF THE APPROVED ESC PLANS MUST BE ON THE JOB SITE WHENEVER CONSTRUCTION IS IN PROGRESS.
9. THE ESC FACILITIES SHOWN ON THIS PLAN MUST BE CONSTRUCTED PRIOR TO OR IN CONJUNCTION WITH ALL CLEARING AND GRADING ACTIVITIES IN SUCH A MANNER AS TO ENSURE THAT SEDIMENT-LADEN WATER DOES NOT ENTER THE DRAINAGE SYSTEM OR VIOLATE APPLICABLE WATER STANDARDS. WHEREVER POSSIBLE, MAINTAIN NATURAL VEGETATION FOR SILT CONTROL.
10. THE ESC FACILITIES SHALL BE CONSTRUCTED IN ACCORDANCE WITH THE DETAILS ON THE APPROVED PLANS. LOCATIONS MAY BE MOVED TO SUIT FIELD CONDITIONS, SUBJECT TO APPROVAL BY THE ENGINEER AND THE CITY OF KIRKLAND INSPECTOR.
11. THE ESC FACILITIES SHOWN ON THIS PLAN ARE THE MINIMUM REQUIREMENTS FOR ANTICIPATED SITE CONDITIONS. DURING THE CONSTRUCTION PERIOD, THESE ESC FACILITIES SHALL BE UPGRADED (E.G., ADDITIONAL SUMPS, RELOCATION OF DITCHES AND SILT FENCES, ETC.) AS NEEDED FOR UNEXPECTED STORM EVENTS. ADDITIONALLY, MORE ESC FACILITIES MAY BE REQUIRED TO ENSURE COMPLETE SILTATION CONTROL. THEREFORE, DURING THE COURSE OF CONSTRUCTION IT SHALL BE THE OBLIGATION AND RESPONSIBILITY OF THE CONTRACTOR TO ADDRESS ANY NEW CONDITIONS THAT MAY BE CREATED BY HIS ACTIVITIES AND TO PROVIDE ADDITIONAL FACILITIES OVER AND ABOVE THE MINIMUM REQUIREMENTS AS MAY BE NEEDED.
12. THE ESC FACILITIES SHALL BE INSPECTED BY THE PERMITTEE/CONTRACTOR DAILY DURING NON-RAINFALL PERIODS, EVERY HOUR (DAYLIGHT) DURING A RAINFALL EVENT, AND AT THE END OF EVERY RAINFALL, AND MAINTAINED AS NECESSARY TO ENSURE THEIR CONTINUED FUNCTIONING. IN ADDITION, TEMPORARY SILTATION PONDS AND ALL TEMPORARY SILTATION CONTROLS SHALL BE MAINTAINED IN A SATISFACTORY CONDITION UNTIL SUCH TIME THAT CLEARING AND/OR CONSTRUCTION IS COMPLETED, PERMANENT DRAINAGE FACILITIES ARE OPERATIONAL, AND THE POTENTIAL FOR EROSION HAS PASSED. WRITTEN RECORDS SHALL BE KEPT DOCUMENTING THE REVIEWS OF THE ESC FACILITIES.
13. THE ESC FACILITIES ON INACTIVE SITES SHALL BE INSPECTED AND MAINTAINED A MINIMUM OF ONCE A MONTH OR WITHIN 48 HOURS FOLLOWING A STORM EVENT.
14. STABILIZED CONSTRUCTION ENTRANCES SHALL BE INSTALLED AT THE BEGINNING OF CONSTRUCTION AND MAINTAINED FOR THE DURATION OF THE PROJECT. ADDITIONAL MEASURES, SUCH AS WASH PADS, MAY BE REQUIRED TO ENSURE THAT ALL PAVED AREAS ARE KEPT CLEAN FOR THE DURATION OF THE PROJECT.
15. ALL DENUDED SOILS MUST BE STABILIZED WITH AN APPROVED TESC METHOD (E.G. SEEDING, MULCHING, PLASTIC COVERING, CRUSHED ROCK) WITHIN THE FOLLOWING TIMELINES:
   - MAY 1 TO SEPTEMBER 30 – SOILS MUST BE STABILIZED WITHIN 7 DAYS OF GRADING.
   - OCTOBER 1 TO APRIL 30 – SOILS MUST BE STABILIZED WITHIN 2 DAYS OF GRADING.
   - STABILIZE SOILS AT THE END OF THE WORKDAY PRIOR TO A WEEKEND, HOLIDAY, OR PREDICTED RAIN EVENT.
16. WHERE SEEDING FOR TEMPORARY EROSION CONTROL IS REQUIRED, FAST GERMINATING GRASSES SHALL BE APPLIED AT AN APPROPRIATE RATE (EXAMPLE: ANNUAL OR PERENNIAL RYE APPLIED AT APPROXIMATELY 80 POUNDS PER ACRE).
17. WHERE STRAW MULCH IS REQUIRED FOR TEMPORARY EROSION CONTROL, IT SHALL BE APPLIED AT A MINIMUM THICKNESS OF 2".
18. ALL LOTS ADJOINING OR HAVING ANY NATIVE GROWTH PROTECTION EASEMENTS (NGPE) SHALL HAVE A 6' HIGH TEMPORARY CONSTRUCTION FENCE (CHAIN LINK WITH PIER BLOCKS) SEPARATING THE LOT (OR BUILDABLE PORTIONS OF THE LOT) FROM THE AREA RESTRICTED BY THE NGPE AND SHALL BE INSTALLED PRIOR TO ANY GRADING OR CLEARING AND REMAIN IN PLACE UNTIL THE PLANNING DEPARTMENT AUTHORIZES REMOVAL.
19. CLEARING LIMITS SHALL BE DELINEATED WITH A CLEARING CONTROL FENCE. THE CLEARING CONTROL FENCE SHALL CONSIST OF A 6-FT. HIGH CHAIN LINK FENCE ADJACENT THE DRIP LINE OF TREES TO BE SAVED, WETLAND OR STREAM BUFFERS, AND SENSITIVE SLOPES. CLEARING CONTROL FENCES ALONG WETLAND OR STREAM BUFFERS OR UPSLOPE OF SENSITIVE SLOPES SHALL BE ACCOMPANIED BY AN EROSION CONTROL FENCE. IF APPROVED BY THE CITY, A FOUR-FOOT HIGH ORANGE MESH CLEARING CONTROL FENCE MAY BE USED TO DELINEATE CLEARING LIMITS IN ALL OTHER AREAS.
20. OFF-SITE STREETS MUST BE KEPT CLEAN AT ALL TIMES. IF DIRT IS DEPOSITED ON THE PUBLIC STREET SYSTEM, THE STREET SHALL BE IMMEDIATELY CLEANED WITH POWER SWEEPER OR OTHER EQUIPMENT. ALL VEHICLES SHALL LEAVE THE SITE BY WAY OF THE CONSTRUCTION ENTRANCE AND SHALL BE CLEANED OF ALL DIRT THAT WOULD BE DEPOSITED ON THE PUBLIC STREETS.
21. ROCK FOR EROSION PROTECTION OF ROADWAY DITCHES, WHERE REQUIRED, MUST BE OF SOUND QUARRY ROCK, PLACED TO A DEPTH OF 1' AND MUST MEET THE FOLLOWING SPECIFICATIONS: 4"-8" ROCK/40%-70% PASSING; 2"-4" ROCK/30%-40% PASSING; AND 1"-2" ROCK/10%-20% PASSING. RECYCLED CONCRETE SHALL NOT BE USED FOR EROSION PROTECTION, INCLUDING CONSTRUCTION ENTRANCE OR TEMPORARY STABILIZATION ELSEWHERE ON THE SITE.
22. IF ANY PART(S) OF THE CLEARING LIMIT BOUNDARY OR TEMPORARY EROSION/SEDIMENTATION CONTROL PLAN IS/ARE DAMAGED, IT SHALL BE REPAIRED IMMEDIATELY.
23. ALL PROPERTIES ADJACENT TO THE PROJECT SITE SHALL BE PROTECTED FROM SEDIMENT DEPOSITION AND RUNOFF.
24. AT NO TIME SHALL MORE THAN 1' OF SEDIMENT BE ALLOWED TO ACCUMULATE WITHIN A CATCH BASIN. ALL CATCH BASINS AND CONVEYANCE LINES SHALL BE CLEANED IMMEDIATELY FOLLOWING REMOVAL OF EROSION CONTROL BMPS. THE CLEANING OPERATION SHALL NOT FLUSH SEDIMENT-LADEN WATER INTO THE DOWNSTREAM SYSTEM.
25. ANY PERMANENT RETENTION/DETENTION FACILITY USED AS A TEMPORARY SETTLING BASIN SHALL BE MODIFIED WITH THE NECESSARY EROSION CONTROL MEASURES AND SHALL PROVIDE ADEQUATE STORAGE CAPACITY. IF THE PERMANENT FACILITY IS TO FUNCTION ULTIMATELY AS AN INFILTRATION OR DISPERSION SYSTEM, THE FACILITY SHALL NOT BE USED AS A TEMPORARY SETTLING BASIN. NO UNDERGROUND DETENTION TANK, DETENTION VAULT, OR SYSTEM WHICH BACKS UNDER OR INTO A POND SHALL BE USED AS A TEMPORARY SETTLING BASIN.
26. ALL EROSION/SEDIMENTATION CONTROL PONDS WITH A DEAD STORAGE DEPTH EXCEEDING 6" MUST HAVE A PERIMETER FENCE WITH A MINIMUM HEIGHT OF 3'.
27. THE WASHED GRAVEL BACKFILL ADJACENT TO THE FILTER FABRIC FENCE SHALL BE REPLACED AND THE FILTER FABRIC CLEANED IF IT IS NONFUNCTIONAL BY EXCESSIVE SILT ACCUMULATION AS DETERMINED BY THE CITY OF KIRKLAND. ALSO, ALL INTERCEPTOR SWALES SHALL BE CLEANED IF SILT ACCUMULATION EXCEEDS ONE-QUARTER DEPTH.
28. PRIOR TO THE OCTOBER 1 OF EACH YEAR (THE BEGINNING OF THE WET SEASON), ALL DISTURBED AREAS SHALL BE REVIEWED TO IDENTIFY WHICH ONES CAN BE SEEDED IN PREPARATION FOR THE WINTER RAINS. THE IDENTIFIED DISTURBED AREA SHALL BE SEEDED WITHIN ONE WEEK AFTER OCTOBER 1. A SITE PLAN DEPICTING THE AREAS TO BE SEEDED AND THE AREAS TO REMAIN UNCOVERED SHALL BE SUBMITTED TO THE PUBLIC WORKS CONSTRUCTION INSPECTOR. THE INSPECTOR CAN REQUIRE SEEDING OF ADDITIONAL AREAS IN ORDER TO PROTECT SURFACE WATERS, ADJACENT PROPERTIES, OR DRAINAGE FACILITIES.
29. ANY AREA TO BE USED FOR INFILTRATION OR PERVIOUS PAVEMENT (INCLUDING A 5-FOOT BUFFER) MUST BE SURROUNDED BY SILT FENCE PRIOR TO CONSTRUCTION AND UNTIL FINAL STABILIZATION OF THE SITE TO PREVENT SOIL COMPACTION AND SILTATION BY CONSTRUCTION ACTIVITIES.
30. IF THE TEMPORARY CONSTRUCTION ENTRANCE OR ANY OTHER AREA WITH HEAVY VEHICLE LOADING IS LOCATED IN THE SAME AREA TO BE USED FOR INFILTRATION OR PERVIOUS PAVEMENT, 6" OF SEDIMENT BELOW THE GRAVEL SHALL BE REMOVED PRIOR TO INSTALLATION OF THE INFILTRATION FACILITY OR PERVIOUS PAVEMENT (TO REMOVE FINES ACCUMULATED DURING CONSTRUCTION).
31. ANY CATCH BASINS COLLECTING RUNOFF FROM THE SITE, WHETHER THEY ARE ON OR OFF THE SITE, SHALL HAVE ADEQUATE PROTECTION FROM SEDIMENT. CATCH BASINS DIRECTLY DOWNSTREAM OF THE CONSTRUCTION ENTRANCE OR ANY OTHER CATCH BASIN AS DETERMINED BY THE CITY INSPECTOR SHALL BE PROTECTED WITH A "STORM DRAIN PROTECTION INSERT" OR EQUIVALENT.
32. IF A SEDIMENT POND IS NOT PROPOSED, A BAKER TANK OR OTHER TEMPORARY GROUND AND/OR SURFACE WATER STORAGE TANK MAY BE REQUIRED DURING CONSTRUCTION, DEPENDING ON WEATHER CONDITIONS.
33. DO NOT FLUSH CONCRETE BY-PRODUCTS OR TRUCKS NEAR OR INTO THE STORM DRAINAGE SYSTEM. IF EXPOSED AGGREGATE IS FLUSHED INTO THE STORM SYSTEM, IT COULD MEAN RE-CLEANING THE ENTIRE DOWNSTREAM STORM SYSTEM, OR POSSIBLY RE-LAYING THE STORM LINE.
34. RECYCLED CONCRETE SHALL NOT BE STOCKPILED ON SITE, UNLESS FULLY COVERED WITH NO POTENTIAL FOR RELEASE OF RUNOFF.

CITY OF KIRKLAND ROADWAY PLAN NOTES

1. A PRE-CONSTRUCTION CONFERENCE SHALL BE HELD PRIOR TO THE START OF CONSTRUCTION. THE CONTRACTOR SHALL BE RESPONSIBLE FOR SECURING ALL NECESSARY PERMITS PRIOR TO CONSTRUCTION.
2. ALL ROADWAY WORK AND MATERIAL SHALL BE IN ACCORDANCE WITH THE CURRENT APWA AND CITY OF KIRKLAND STANDARDS AND SPECIFICATIONS.
3. ALL PUBLIC ROADWAYS SHALL BE CONSTRUCTED OF 2" CLASS "B" AC PAVING ON 4" ASPHALT-TREATED BASE (ATB), UNLESS OTHERWISE APPROVED BY THE PUBLIC WORKS DEPARTMENT.
4. A COPY OF THE APPROVED ROADWAY PLANS MUST BE ON THE JOB SITE WHENEVER CONSTRUCTION IS IN PROGRESS.
5. DENSITY TEST REPORTS WILL BE REQUIRED FOR ALL PUBLIC ROADWAYS AND ALL PRIVATE ROADWAYS WITHIN PLATS. ALL TRENCH BACKFILL SHALL BE COMPACTED TO 95 PERCENT DENSITY IN ROADWAYS, ROADWAY SHOULDERS, ROADWAY PRISM AND DRIVEWAYS, AND 85 PERCENT DENSITY IN UNPAVED AREAS. ALL PIPE ZONE COMPACTION SHALL BE 95 PERCENT.
6. ALL COMMERCIAL AND RESIDENTIAL DRIVEWAYS MUST CONFORM TO THE CITY OF KIRKLAND DEPARTMENT OF PUBLIC WORKS DRIVEWAY POLICY.
7. ALL CONCRETE FOR SIDEWALKS AND CURB AND GUTTER MUST BE 4,000 PSI MINIMUM. (5-3/4 SACK MIX.)
8. IN THE CASE OF NEW ROAD CONSTRUCTION OR RECONSTRUCTION REQUIRING MAILBOXES TO BE MOVED OR REARRANGED, THE DEVELOPER/CONTRACTOR SHALL COORDINATE WITH THE U.S. POSTAL SERVICE FOR THE NEW LOCATION OF THE MAILBOX STRUCTURE.
9. ANY ROADWAY SIGNAGE OR STRIPING REMOVED OR TEMPORARILY MOVED BY THE CONTRACTOR SHALL BE RESTORED TO MEET THE CURRENT CITY OF KIRKLAND STANDARDS.
10. IT IS THE RESPONSIBILITY OF THE CONTRACTOR TO PROVIDE ADEQUATE TEMPORARY TRAFFIC CONTROL TO ENSURE TRAFFIC SAFETY DURING CONSTRUCTION ACTIVITIES. THEREFORE, THE CONTRACTOR SHALL SUBMIT A TRAFFIC CONTROL PLAN TO THE PUBLIC WORKS DEPARTMENT AT LEAST 48 HOURS PRIOR TO STARTING ANY WORK IN THE RIGHT-OF-WAY. ALL TRAFFIC CONTROL DEVICES SHALL CONFORM TO THE "MANUAL ON UNIFORM TRAFFIC CONTROL DEVICES" (MUTCD) OR AS MODIFIED BY THE TRAFFIC ENGINEER.
11. WHERE A SIDEWALK IS TO BE CONSTRUCTED ABOVE A SLOPE OR ADJACENT TO A ROCKERY OR RETAINING WALL WHERE THE LOWEST FINISHED ELEVATION OF THE SLOPE, ROCKERY, OR RETAINING WALL IS TO BE THIRTY INCHES (30") OR MORE BELOW THE FINISHED ELEVATION OF THE SIDEWALK, A SAFETY RAILING SHALL BE REQUIRED WHEN: (A) THE PLANE OF THE WALL FACE IS LESS THAN 4' IN HORIZONTAL DISTANCE FROM THE OUTSIDE EDGE OF THE SIDEWALK; (B) THE SLOPES ADJACENT TO THE SIDEWALK AVERAGE GREATER THAN TWO TO ONE.
12. THE MAXIMUM GRADE FOR PRIVATE ROADWAYS SHALL BE TWENTY PERCENT (20%), OR FIFTEEN PERCENT (15%) IF USED FOR FIRE ACCESS. FOR PUBLIC ROADWAYS, THE MAXIMUM GRADE SHALL BE FIFTEEN PERCENT (15%).
13. DEAD-END STREETS SHALL BE APPROPRIATELY SIGNED AND BARRICADED. SEE MOST CURRENT EDITION OF THE MUTCD.
14. SIDEWALK AND CURB AND GUTTER CANNOT BE POURED MONOLITHICALLY. THERE MUST BE A COLD JOINT OR FULL-DEPTH EXPANSION JOINT BETWEEN THEM.
15. MEASURES SHALL BE TAKEN BY THE DEVELOPER TO PROVIDE GROUND COVER IN AREAS WITHIN THE RIGHT-OF-WAY WHICH HAVE BEEN STRIPPED OF NATURAL VEGETATION OR HAVE A POTENTIAL FOR EROSION.
16. THE DEVELOPER SHALL COORDINATE WITH PUGET POWER FOR THE DESIGN AND INSTALLATION OF STREET LIGHTS ON ALL NEWLY-CREATED PUBLIC ROADWAYS AND EXISTING ROADWAYS.
17. WHEN AN EXISTING ROADWAY IS TO RECEIVE A HALF-STREET OVERLAY, THE EXISTING ROADWAY MUST BE COLD PLANED AT THE EDGE OF THE GUTTER AND CENTERLINE. WHEN THE EXISTING ROADWAY IS TO RECEIVE A FULL-STREET OVERLAY, IT MUST BE COLD PLANED AT THE EDGE OF BOTH GUTTERS. SEE CITY OF KIRKLAND STANDARD DETAIL NO. R.13.
18. ALL NEW SIGNS REQUIRED IN THE PUBLIC RIGHT-OF-WAY MUST BE PURCHASED FROM, AND INSTALLED BY, THE CITY OF KIRKLAND PUBLIC WORKS DEPARTMENT.
19. WHEN INSTALLING NEW SIDEWALK, THE AREA BEHIND THE SIDEWALK MUST BE GRADED SO THAT THE YARD DRAINAGE DOES NOT DRAIN OVER THE SIDEWALK.
20. ANY EXISTING PUBLIC IMPROVEMENTS DAMAGED DURING CONSTRUCTION SHALL BE REPLACED PRIOR TO FINAL INSPECTION.
21. THE CONTRACTOR IS RESPONSIBLE FOR KEEPING ALL PUBLIC STREETS FREE FROM MUD AND DEBRIS AT ALL TIMES. THE CONTRACTOR SHALL BE PREPARED TO USE POWER SWEEPERS OR OTHER PIECES OF EQUIPMENT NECESSARY TO KEEP THE ROADWAYS CLEAN.
22. BACKFILL IN ALL STREET CUTS ON ARTERIALS WILL BE CONTROL DENSITY FILL (CDF). CONTRACTOR MUST PROVIDE STEEL PLATING NECESSARY TO ALLOW THE CDF TO CURE.
23. WHEN CONSTRUCTING NEW CURB AND GUTTER WHICH DOES NOT ALIGN WITH THE EXISTING EDGE OF PAVEMENT, THE ROADWAY MUST BE TAPERED FROM THE ENDS OF THE NEW CURB AND GUTTER TO MATCH THE EXISTING PAVEMENT. THE ENTRY TAPER INTO THE NEW IMPROVEMENTS SHALL BE 5:1 AND LEAVING THE NEW IMPROVEMENTS SHALL BE 10:1.
24. WHEN AN EXISTING ROADWAY IS TO BE WIDENED, THE EXISTING PAVEMENT MUST BE SAW CUT AT LEAST ONE FOOT FROM THE EDGE TO PROVIDE A PROPER MATCH BETWEEN NEW AND EXISTING ASPHALT. HOWEVER, WHEN THE EXISTING PAVEMENT CONTAINS ALLIGATORED AREAS, THOSE AREAS MUST BE REMOVED PRIOR TO WIDENING. ALL SAW CUTS SHALL BE PARALLEL OR PERPENDICULAR TO THE RIGHT-OF-WAY CENTERLINE.
25. ALL ROCKERIES MUST BE CONSTRUCTED IN ACCORDANCE WITH THE MOST CURRENT GUIDELINES OF THE ASSOCIATION.

811 Call 811 two business days before you dig

TCA
ARCHITECTURE + PLANNING + DESIGN
6211 ROOSEVELT WAY NORTHEAST
SEATTLE, WA 98115
tel: (206) 522-3830
fax: (206) 522-2456

kpff
1601 5th Avenue, Suite 1600
Seattle, WA 98101
206.622.5822
www.kpff.com

JEREMY S. PERRIS — STATE OF WASHINGTON — 39847 — REGISTERED PROFESSIONAL ENGINEER

7/20/2020

BID SET

No.	Description	Date:

Project Title:

FIRE STATION 24

City of Kirkland
Kirkland, Washington

Sheet Title:

GENERAL NOTES

Scale: AS NOTED
Project No. : 1700011
Date : JULY 21, 2020

Sheet Number :

C1.1

Jul 20, 2020 - 12:19pm teresad Z:\1700001-1700999\1700011 (Kirkland Fire Sta 24)\C400\Design\C01\C1.00KFS-24 GNR.dwg

Provided to Builders Exchange of WA, Inc. For usage Conditions Agreement see www.bxwa.com - Always Verify Scal

CITY OF KIRKLAND STORM DRAINAGE PLAN NOTES

1. A PRE-CONSTRUCTION CONFERENCE SHALL BE HELD PRIOR TO THE START OF CONSTRUCTION. THE CONTRACTOR SHALL BE RESPONSIBLE FOR SECURING ALL NECESSARY PERMITS PRIOR TO CONSTRUCTION.

2. BEFORE ANY CONSTRUCTION MAY OCCUR, THE CONTRACTOR SHALL HAVE PLANS WHICH HAVE BEEN SIGNED AND APPROVED BY THE CITY OF KIRKLAND PUBLIC WORKS DEPARTMENT, OBTAINED ALL CITY, COUNTY, STATE, FEDERAL AND OTHER REQUIRED PERMITS, AND HAVE POSTED ALL REQUIRED BONDS.

3. ALL STORM DRAINAGE IMPROVEMENTS SHALL BE DESIGNED AND CONSTRUCTED IN ACCORDANCE WITH THE LATEST EDITION OF THE CITY OF KIRKLAND PUBLIC WORKS PRE-APPROVED PLANS AND POLICIES AND THE STANDARD SPECIFICATIONS FOR ROAD, BRIDGE AND MUNICIPAL CONSTRUCTION, PREPARED BY WSDOT AND THE AMERICAN PUBLIC WORKS ASSOCIATION (APWA).

4. ANY DEVIATION FROM THE APPROVED PLANS WILL REQUIRE WRITTEN APPROVAL, ALL CHANGES SHALL BE SUBMITTED TO THE CITY.

5. A COPY OF THE APPROVED STORM WATER PLANS MUST BE ON THE JOB SITE WHENEVER CONSTRUCTION IS IN PROGRESS.

6. ALL DISTURBED AREAS SHALL BE SEEDED AND MULCHED OR SIMILARLY STABILIZED TO THE SATISFACTION OF THE CITY OF KIRKLAND DEPARTMENT OF PUBLIC WORKS FOR THE PREVENTION OF ON-SITE EROSION AFTER THE COMPLETION OF CONSTRUCTION.

7. MINIMUM COVER OVER STORM DRAINAGE PIPES IN ROW OR VEHICULAR PATH SHALL BE 18 INCHES, UNLESS OTHER DESIGN IS APPROVED.

8. STEEL PIPE SHALL HAVE ASPHALT TREATMENT #1 OR BETTER INSIDE AND OUTSIDE.

9. ALL CATCH BASINS SHALL BE TYPE I UNLESS OTHERWISE NOTED. CATCH BASINS WITH A DEPTH OF OVER FIVE FEET (5') TO THE PIPE INVERT SHALL BE A TYPE II CATCH BASIN. TYPE II CATCH BASINS EXCEEDING FIVE FEET (5') IN DEPTH SHALL HAVE A STANDARD LADDER INSTALLED.

10. ALL STORM DRAINAGE MAIN EXTENSIONS WITHIN THE PUBLIC RIGHT-OF-WAY OR IN EASEMENTS MUST BE STAKED FOR LINE AND GRADE PRIOR TO STARTING CONSTRUCTION.

11. ROCK FOR EROSION PROTECTION OF ROADWAY DITCHES, WHERE REQUIRED, MUST BE OF SOUND QUARRY ROCK, PLACED TO A DEPTH OF ONE FOOT (1') AND MUST MEET THE FOLLOWING SPECIFICATIONS: 4"-8" ROCK/40%-70% PASSING; 2"-4" ROCK/30%-40% PASSING; 2"-MINUS ROCK/10%-20% PASSING. RECYCLED CONCRETE SHALL NOT BE USED FOR EROSION PROTECTION, INCLUDING FOR CONSTRUCTION ENTRANCE OR TEMPORARY STABILIZATION ELSEWHERE ON SITE.

12. ALL PIPE, MANHOLES, CATCH BASINS, AND APPURTENANCES SHALL BE LAID ON A PROPERLY PREPARED FOUNDATION IN ACCORDANCE WITH THE CURRENT STATE OF WASHINGTON STANDARD SPECIFICATIONS FOR ROAD AND BRIDGE CONSTRUCTION (WSDOT). THIS SHALL INCLUDE NECESSARY LEVELING OF THE TRENCH BOTTOM OR THE TOP OF THE FOUNDATION MATERIAL AS WELL AS PLACEMENT AND COMPACTION OF REQUIRED BEDDING MATERIAL TO UNIFORM GRADE SO THAT THE ENTIRE LENGTH OF THE PIPE WILL BE SUPPORTED ON A UNIFORMLY DENSE, UNYIELDING BASE. IF THE NATIVE MATERIAL IN THE BOTTOM OF THE TRENCH MEETS THE REQUIREMENTS FOR "GRAVEL BACKFILL FOR PIPE BEDDING," THE FIRST LIFT OF PIPE BEDDING MAY BE OMITTED PROVIDED THE MATERIAL IN THE BOTTOM OF THE TRENCH IS LOOSENED, REGRADED, AND COMPACTED TO FORM A DENSE UNYIELDING BASE. ALL PIPE BEDDING SHALL BE APWA CLASS B, TYPE I, OR BETTER. PIPE SHALL NOT BE INSTALLED ON SOD, FROZEN EARTH, LARGE BOULDERS, OR ROCK. PIPE BEDDING FOR FLEXIBLE PIPES SHALL BE PEA GRAVEL TO THE SPRINGLINE OF THE PIPE.

13. CONSTRUCTION OF DEWATERING DISCHARGES SHALL ALWAYS MEET WATER QUALITY GUIDELINES LISTED IN COK POLICY E-1. SPECIFICALLY, DISCHARGES TO THE PUBLIC STORMWATER DRAINAGE SYSTEM MUST BE BELOW 25NTU, AND NOT CONSIDERED A PROHIBITED DISCHARGE (PER KMC 15.52.090). TEMPORARY DISCHARGES TO SANITARY SEWER REQUIRE PRIOR AUTHORIZATION AND PERMIT FROM KING COUNTY INDUSTRIAL WASTE PROGRAM (206-263-3000) AND NOTIFICATION TO THE PUBLIC WORKS CONSTRUCTION INSPECTOR.

14. ISSUANCE OF A BUILDING OR LAND SURFACE MODIFICATION PERMIT BY THE CITY OF KIRKLAND DOES NOT RELIEVE THE OWNER OF THE CONTINUING LEGAL OBLIGATION AND/OR LIABILITY CONNECTED WITH STORM SURFACE WATER DISPOSITION. FURTHER, THE CITY OF KIRKLAND DOES NOT ACCEPT ANY OBLIGATION FOR THE PROPER FUNCTIONING AND MAINTENANCE OF THE SYSTEM DURING OR FOLLOWING CONSTRUCTION EXCEPT AS OUTLINED IN THE CITY OF KIRKLAND PUBLIC WORKS STANDARDS.

15. ALL TRENCH BACKFILL SHALL BE COMPACTED TO 95 PERCENT DENSITY IN ROADWAYS, ROADWAY SHOULDERS, ROADWAY PRISM AND DRIVEWAYS, AND 85 PERCENT DENSITY IN UNPAVED AREAS. ALL PIPE ZONE COMPACTION SHALL BE 95 PERCENT.

16. THE CONTRACTOR SHALL BE RESPONSIBLE FOR PROVIDING ADEQUATE SAFEGUARDS, SAFETY DEVICES, PROTECTIVE EQUIPMENT, CONFINED SPACE PROTECTION, FLAGGERS, AND ANY OTHER NEEDED ACTIONS TO PROTECT THE LIFE, HEALTH, AND SAFETY OF THE PUBLIC, AND TO PROTECT PROPERTY IN CONNECTION WITH THE PERFORMANCE OF WORK COVERED BY THE CONTRACT. ANY WORK WITHIN THE TRAVELED RIGHTOF-WAY THAT MAY INTERRUPT NORMAL TRAFFIC FLOW SHALL REQUIRE A TRAFFIC CONTROL PLAN APPROVED BY THE CITY OF KIRKLAND. ALL SECTIONS OF THE WSDOT STANDARD SPECIFICATIONS, TRAFFIC CONTROL, AND THE MANUAL OF UNIFORM TRAFFIC CONTROL DEVICES (MUTCD) SHALL APPLY.

17. NO FINAL CUT OR FILL SLOPE SHALL EXCEED SLOPES OF TWO (2) HORIZONTAL TO ONE (1) VERTICAL WITHOUT STABILIZATION BY ROCKERY OR BY A STRUCTURAL RETAINING WALL.

18. ALL MANHOLE LADDERS SHALL BE FIRMLY ATTACHED AND EXTEND TO WITHIN 1' OF THE BOTTOM OF THE STRUCTURE.

19. APPROXIMATE LOCATIONS OF EXISTING UTILITIES HAVE BEEN OBTAINED FROM AVAILABLE RECORDS AND ARE SHOWN FOR CONVENIENCE. THE CONTRACTOR SHALL BE RESPONSIBLE FOR VERIFICATION OF EXISTING UTILITY LOCATIONS WHETHER OR NOT THESE UTILITIES ARE SHOWN ON THE PLANS. THE CONTRACTOR SHALL EXERCISE ALL CARE TO AVOID DAMAGE TO ANY UTILITY. IF CONFLICTS WITH EXISTING UTILITIES ARISE DURING CONSTRUCTION, THE CONTRACTOR SHALL NOTIFY THE CITY CONSTRUCTION INSPECTOR AND ANY CHANGES REQUIRED SHALL BE APPROVED BY THE DEVELOPMENT ENGINEER PRIOR TO COMMENCEMENT OF RELATED CONSTRUCTION ON THE PROJECT.

20. THE UNDERGROUND UTILITY LOCATION SERVICE SHALL BE CONTACTED FOR FIELD LOCATION OF EXISTING UTILITIES PRIOR TO ANY CONSTRUCTION. THE OWNER OR HIS REPRESENTATIVE SHALL BE CONTACTED IF A UTILITY CONFLICT EXISTS. FOR UTILITY LOCATION IN KING COUNTY, CALL 1-800-424-5555. THE CONTRACTOR IS RESPONSIBLE TO ENSURE THAT UTILITY LOCATES ARE MAINTAINED THROUGHOUT THE LIFE OF THE PROJECT.

21. THE CONTRACTOR SHALL VERIFY THE LOCATIONS, WIDTHS, THICKNESSES, AND ELEVATIONS OF ALL EXISTING PAVEMENTS AND STRUCTURES THAT ARE TO INTERFACE WITH NEW WORK. PROVIDE ALL TRIMMING, CUTTING, SAW CUTTING, GRADING, LEVELING, SLOPING, COATING, AND OTHER WORK, INCLUDING MATERIALS AS NECESSARY, TO CAUSE THE INTERFACE WITH EXISTING WORKS TO BE PROPER, ACCEPTABLE TO THE ENGINEER AND THE CITY OF KIRKLAND, COMPLETE IN PLACE AND READY TO USE.

22. ALL INLET, MANHOLE, AND CATCH BASIN FRAMES AND GRATES SHALL NOT BE ADJUSTED TO GRADE UNTIL IMMEDIATELY PRIOR TO FINAL PAVING. ALL CATCH BASIN GRATES SHALL BE SET 0.10' BELOW PAVEMENT LEVEL.

23. OPEN CUT ROAD CROSSINGS FOR UTILITY TRENCHES ON EXISTING TRAVELED ROADWAY SHALL BE BACKFILLED ONLY WITH 5/8" MINUS CRUSHED ROCK AND MECHANICALLY COMPACTED (UNLESS OTHERWISE APPROVED BY THE CITY). FOR STREETS CLASSIFIED AS ARTERIALS OR COLLECTORS, BACKFILL FOR CROSSINGS SHALL BE CDF. CUTS INTO THE EXISTING ASPHALT SHALL BE NEAT LINE CUT WITH SAW OR JACKHAMMER IN A CONTINUOUS LINE. A TEMPORARY COLD MIX PATCH MUST BE PLACED IMMEDIATELY AFTER BACKFILL AND COMPACTION. A PERMANENT HOT MIX PATCH SHALL BE PLACED WITHIN 30 DAYS AND SHALL BE A MINIMUM OF 1" THICKER THAN THE ORIGINAL ASPHALT WITH A MINIMUM THICKNESS OF 2". SEE STANDARD D.02.

24. ALL DAMAGES INCURRED TO PUBLIC AND/OR PRIVATE PROPERTY BY THE CONTRACTOR DURING THE COURSE OF CONSTRUCTION SHALL BE PROMPTLY REPAIRED TO THE SATISFACTION OF THE CITY CONSTRUCTION INSPECTOR BEFORE PROJECT APPROVAL AND/OR THE RELEASE OF THE PROJECTS PERFORMANCE BOND.

25. GROUT ALL SEAMS AND OPENINGS IN ALL INLETS, CATCH BASINS, AND MANHOLES. JETSET GROUT IS NOT ALLOWED.

26. WHEN WIDENING AN EXISTING ROADWAY WHERE AN EXISTING TYPE I CATCH BASIN WILL REMAIN IN THE TRAVEL LANE, THE EXISTING FRAME AND COVER SHALL BE REPLACED WITH A ROUND, LOCKING FRAME AND COVER.

27. FOR OTHER THAN SINGLE-FAMILY DWELLINGS, ALL EXPOSED OR READILY EXPOSED INDOOR STORM DRAINAGE PIPING/PLUMBING SHALL BE LABELED WITH THE WORDS "STORM DRAIN" WITH MINIMUM 2 INCH HIGH LETTERS.

28. RECYCLED CONCRETE SHALL NOT BE USED AROUND STORMWATER FACILITIES.

29. ALL FASTENERS (BOLTS, NUTS, WASHERS, ETC.) ON MANHOLE AND CATCH BASIN LIDS TO BE STANDARD SIZE. NO METRIC FASTENERS ALLOWED.

811 Call 811 two business days before you dig

Z:\1700001-1700999\1700011 (Kirkland Fire Sta 24)\CAD\Design\C2\C1.00KFS-24 CVR.dwg
Jul 20, 2020 - 12:19pm teresad

T C A
ARCHITECTURE + PLANNING + DESIGN
6211 ROOSEVELT WAY NORTHEAST
SEATTLE, WA 98115
tel: (206) 522-3830
fax: (206) 522-2456

kpff
1601 5th Avenue, Suite 1600
Seattle, WA 98101
206.622.5822
www.kpff.com

TERRENCE S. PETERS
STATE OF WASHINGTON
39847
REGISTERED
PROFESSIONAL ENGINEER

7/20/2020

BID SET

No.	Description	Date:

Project Title:

FIRE STATION 24
City of Kirkland
Kirkland, Washington

Sheet Title:

GENERAL NOTES

Scale: AS NOTED
Project No.: 1700011
Date: JULY 21, 2020

Sheet Number:

C1.2

Provided to Builders Exchange of WA, Inc. For usage Conditions Agreement see www.bxwa.com - Always Verify Scal

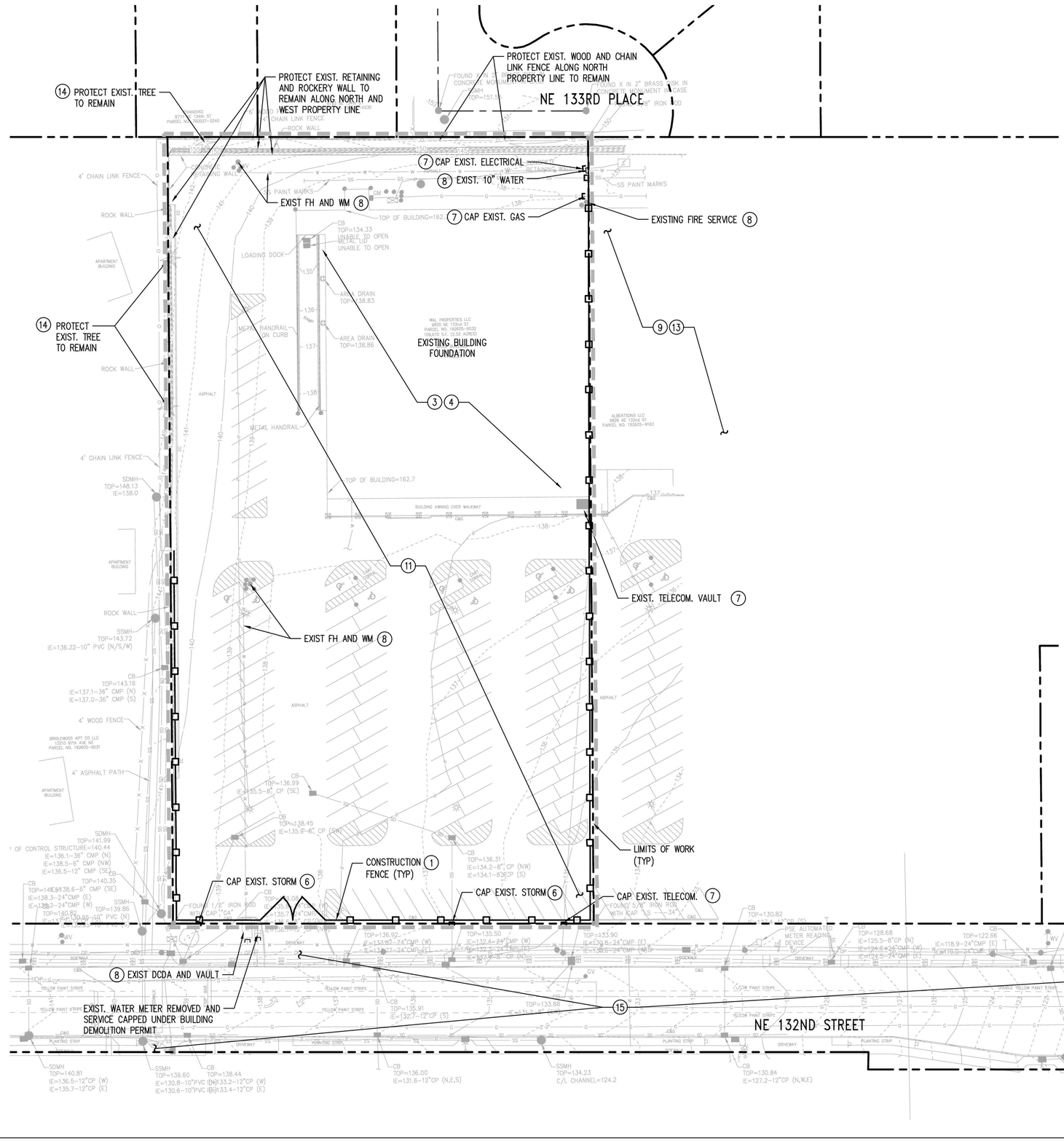

DEMOLITION NOTES:

1. CONSTRUCTION FENCE OWNERSHIP SHALL BE TRANSFERRED FROM OWNER TO CONTRACTOR. CONTRACTOR SHALL TAKE NECESSARY PRECAUTIONS TO PREVENT UNAUTHORIZED ACCESS INTO THE DEMOLITION AREA.
2. CONTRACTOR SHALL FIELD VERIFY THE LOCATION OF ALL UTILITIES PRIOR TO DEMOLITION OR CONSTRUCTION ACTIVITIES.
3. EXISTING BUILDING DEMOLISHED, UNDER SEPARATE PERMIT.
4. CONTRACTOR SHALL DEMOLISH EXISTING BUILDING FOUNDATION AND OBTAIN NECESSARY PERMITS FOR DEMOLITION ACTIVITIES.
5. CONTRACTOR SHALL OBTAIN AND PAY FOR NECESSARY PERMITS TO EXECUTE DEMOLITION, INCLUDING PERMIT TO USE PUBLIC WATER SUPPLY FOR DUST SUPPRESSION.
6. CONTRACTOR SHALL CAP EXISTING STORM SERVICE TO MEET CITY OF KIRKLAND STANDARDS AND SPECIFICATIONS.
7. CONTRACTOR SHALL COORDINATE WITH ELECTRICAL, GAS AND TELECOMMUNICATIONS UTILITY OWNER'S TO RETIRE AND REMOVE EXISTING SERVICES PRIOR TO DEMOLITION.
8. EXISTING PRIVATE FIRE HYDRANT AND APPURTENCES, AND METERS SHALL BE RETIRED UNDER SEPARATE NUD PERMIT. SEE NUD WATER AND SEWER PERMIT PLANS FOR DEMOLTION
9. CONTRACTOR SHALL PROTECT AND MAINTAIN UNINTERRUPTED UTILITY SERVICE TO NEIGHBORING PROPERTIES AND BUILDINGS DURING DEMOLITION AND CONSTRUCTION ACTIVITIES. CONTRACTOR SHALL COORDINATE INTERIM MEASURES WITH AFFECTED PARTIES.
10. SURFACE AND BELOW GRADE IMPROVEMENTS TO REMAIN SHALL BE REPLACED/ REPAIRED AT CONTRACTOR'S EXPENSE IF DAMAGED DURING DEMOLITION AND CONSTRUCTION ACTIVITIES.
11. EXISTING ABOVE AND BELOW GRADE SURFACE IMPROVEMENTS AND UTILITIES WITHIN THE PROPERTY ARE TO BE DEMOLISHED, UNLESS OTHERWISE NOTED.
12. CONTRACTOR SHALL PROTECT EXISTING MONUMENTS/PROPERTY CORNER STAKES ON ADJACENT PROPERTIES AND RIGHT-OF-WAY, AND SHALL REPLACE TO CITY AND STATE STANDARDS IF DISTURBED.
13. CONTRACTOR SHALL PROTECT ADJACENT BUILDINGS, AND MAINTAIN PEDESTRIAN AND VEHICULAR ACCESS TO ADJACENT PROPERTIES DURING DEMOLITION AND CONSTRUCTION.
14. CONTRACTOR SHALL PROVIDE TREE PROTECTION PER COK PRE-APPROVED PLAN CK-R.49 FOR EXISTING TREES TO REMAIN. SEE LANDSCAPE PLANS FOR ADDITIONAL TREE PROTECTION DETAILS AND REQUIREMENTS
15. SEE TRAFFIC SIGNAL PLANS AND SHEETS C8.0-C8.3 FOR RIGHT OF WAY FRONTAGE IMPROVEMENTS LIMITS OF WORK AND DEMOLITION.

TCA
ARCHITECTURE + PLANNING + DESIGN
6211 ROOSEVELT WAY NORTHEAST
SEATTLE, WA 98115
tel: (206) 522-3830
fax: (206) 522-2456

kpff
1601 5th Avenue, Suite 1600
Seattle, WA 98101
206.622.5822
www.kpff.com

JEREMY S. TREES STATE OF WASHINGTON 19847 REGISTERED PROFESSIONAL ENGINEER

7/20/2020

BID SET

No.	Description	Date:

Project Title:

FIRE STATION 24

City of Kirkland
Kirkland, Washington

Sheet Title:

DEMOLITION PLAN

Scale: **AS NOTED**
Project No. : **1700011**
Date : **JULY 21, 2020**

Sheet Number :

C2.0

811 Call 811 two business days before you dig

Z:\1700001-1700999\1700011 (Kirkland Fire Sta 24)\CAD\Design\CD\C2.0KFS-24 DEMO.dwg
Jul 20, 2020 - 12:19pm tenwood

Provided to Builders Exchange of WA, Inc. For usage Conditions Agreement see www.bxwa.com - Always Verify Scal

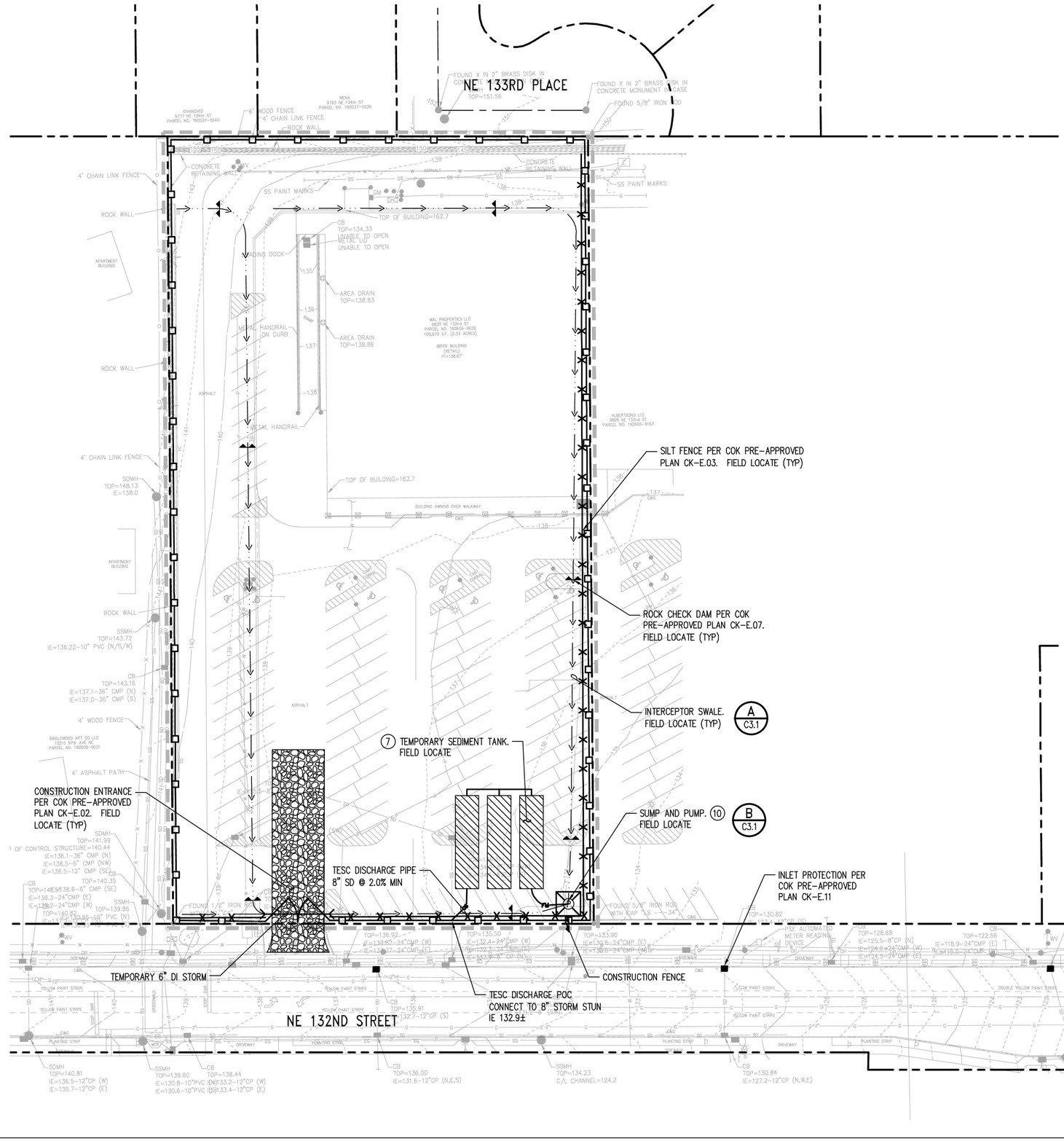

TESC NOTES:

1. THE CONTRACTOR SHALL PROVIDE AND MAINTAIN TEMPORARY EROSION CONTROL AND SEDIMENT COLLECTION FACILITIES TO ENSURE THAT SEDIMENT-LADEN WATER DOES NOT ENTER THE NATURAL OR PUBLIC DRAINAGE SYSTEM PER COK STD SPECS SECTION 8-01. AS CONSTRUCTION PROGRESSES AND UNEXPECTED (SEASONAL) CONDITIONS DICTATE, ADDITIONAL CONTROL FACILITIES MAY BE REQUIRED. DURING THE COURSE OF CONSTRUCTION IT SHALL BE THE OBLIGATION AND RESPONSIBILITY OF THE CONTRACTOR TO ADDRESS ANY NEW CONDITIONS THAT MAY BE CREATED BY THE CONTRACTOR'S ACTIVITIES AND TO PROVIDE ADDITIONAL FACILITIES THAT MAY BE NEEDED TO PROTECT ADJACENT PROPERTIES.
2. CONTRACTOR SHALL PROVIDE CONSTRUCTION FENCING, SCREENING, SIGNAGE, AND BARRIERS TO PREVENT UNAUTHORIZED ACCESS INTO CONSTRUCTION AREA.
3. NO TEMPORARY DISCHARGES TO SANITARY SEWER ARE PROPOSED FOR THIS PROJECT. ANY FUTURE WASTEWATER DISCHARGES TO THE SANITARY SEWER MUST BE APPROVED BY THE CITY OF KIRKLAND AND NORTHSHORE UTILITY DISTRICT, AND MUST DISCHARGE TO A PRIVATE SIDE SEWER ON SITE, TO BE IDENTIFIED IN THE FIELD.
4. ANY SITE DEWATERING (E.G. GROUNDWATER) MUST BE DISCHARGED TO THE PUBLIC DRAINAGE SYSTEM VIA THE STORM DRAIN POINT OF DISCHARGE.
5. THE CONTRACTOR SHALL PROVIDE TEMPORARY VEHICULAR AND PEDESTRIAN TRAFFIC CONTROL TO ROUTE TRAFFIC AROUND THE PROJECT SIDE, AS REQUIRED. CONTRACTOR SHALL MAINTAIN FIRE ACCESS TO ALL BUILDINGS AND PROJECT AREA.
6. CONTRACTOR SHALL COORDINATE WITH THE CITY OF KIRKLAND PRIOR TO DISCHARGING CONSTRUCTION WATER FROM THIS SITE. CONTRACTOR IS RESPONSIBLE FOR OBTAINING DISCHARGE AUTHORIZATION LETTER AND SIDE SEWER PERMIT FOR TEMPORARY DEWATERING, AS REQUIRED BY THE CITY. SIDE SEWER PERMIT FOR TEMPORARY DEWATERING SHALL BE OBTAINED PRIOR TO DRAINAGE PERMIT APPROVAL.

(7) FIELD LOCATE SEDIMENT TANK (BAKER TANK OR APPROVED EQUAL). THE SEDIMENT TANK (53,229 GALLON TOTAL CAPACITY) SHOWN IS BASED ON THE 2 YEAR 24-HOUR DESIGN STORM PEAK VOLUME FOR A DISTURBED SITE AREA OF 2.52 ACRES WITHIN THE LIMITS OF CONSTRUCTION. THE CONTRACTOR IS RESPONSIBLE FOR ADDING ADDITIONAL SEDIMENT TANKS SHOULD THE DISTURBED AREA INCREASE. CONTRACTOR SHALL MONITOR DISCHARGE FLOW AND WATER QUALITY OF DISCHARGE INTO THE COK STORM DRAINAGE MAIN AND INCLUDE FILTERS WITHIN THE BAKER TANKS AS REQUIRED TO MEET THE CITY OF KIRKLAND AND WASHINGTON STATE DEPARTMENT OF ECOLOGY TURBIDITY DISCHARGE REQUIREMENTS.

8. A CERTIFIED EROSION AND SEDIMENT CONTROL LEAD SHALL BE PRESENT ON-SITE OR BE ON-CALL AT ALL TIMES.
9. THE CONTRACTOR SHALL LOCATE AND PROVIDE A CONCRETE WASHOUT FACILITY IN ACCORDANCE WITH THE CITY OF KIRKLAND REQUIREMENTS. WASHOUT FACILITY SHALL NOT BE LOCATED IN AN AREA THAT RECEIVES SURFACE WATER RUNOFF AND SHALL NOT BE LOCATED WITHIN 50 FEET OF A DITCH OR CONNECTION TO THE STORM DRAIN SYSTEM.

(10) PUMP LOCATION SHOWN FOR REFERENCE ONLY. CONTRACTOR SHALL SIZE AND FIELD LOCATE PUMP.

TCA
ARCHITECTURE + PLANNING + DESIGN
6211 ROOSEVELT WAY NORTHEAST
SEATTLE, WA 98115
tel: (206) 522-3830
fax: (206) 522-2456

kpff
1601 5th Avenue, Suite 1600
Seattle, WA 98101
206.622.5822
www.kpff.com

JEREMY S. PERRIS
STATE OF WASHINGTON
19847
REGISTERED PROFESSIONAL ENGINEER
7/20/2020

BID SET

No.	Description	Date:

Project Title:

FIRE STATION 24
City of Kirkland
Kirkland, Washington

Sheet Title:

TESC PLAN

Scale: **AS NOTED**
Project No.: **1700011**
Date: **JULY 21, 2020**

Sheet Number:

C3.0

811 Call 811 two business days before you dig

Z:\1700011-1700099\1700011 (Kirkland Fire Sta 24)\CAD\Design\C01\C3.0-KFS-24 ESC.dwg
Jul 20, 2020 - 12:19pm teresad

Provided to Builders Exchange of WA, Inc. For usage Conditions Agreement see www.bxwa.com - Always Verify Scal

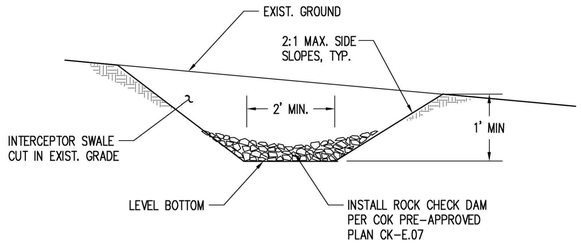

NOTE:
DAMAGE RESULTING FROM RUNOFF OR CONSTRUCTION ACTIVITY SHALL BE REPAIRED IMMEDIATELY.

TEMPORARY INTERCEPTOR SWALE (A / C3.0)
NTS

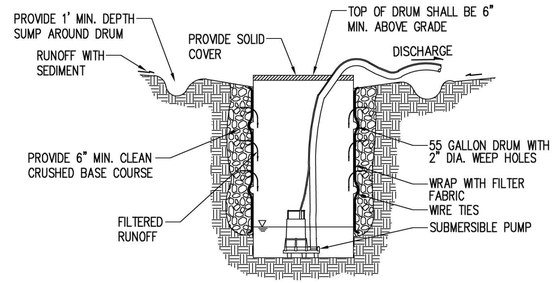

NOTE
PUMPS SHALL BE SUBMERSIBLE.
CONTRACTOR IS RESPONSIBLE FOR SIZING PUMP BASED ON FIELD CONDITIONS.

MOBILE 55 GAL. STEEL DRUM W/PUMP (B / C3.00)
NTS

Call 811 two business days before you dig

TCA
ARCHITECTURE + PLANNING + DESIGN
6211 ROOSEVELT WAY NORTHEAST
SEATTLE, WA 98115
tel: (206) 522-3830
fax: (206) 522-2456

kpff
1601 5th Avenue, Suite 1600
Seattle, WA 98101
206.622.5822
www.kpff.com

LICENSED STRUCTURAL ENGINEER — STATE OF WASHINGTON — 39847 — REGISTERED PROFESSIONAL ENGINEER

7/20/2020

BID SET

No.	Description	Date:

Project Title:

FIRE STATION 24
City of Kirkland
Kirkland, Washington

Sheet Title:

TESC DETAILS

Scale: **AS NOTED**
Project No.: **1700011**
Date: **JULY 21, 2020**

Sheet Number:

C3.1

Jul 20, 2020 - 12:19pm teresad
Z:\1700001-1700999\1700011 (Kirkland Fire Sta 24)\CADD\Design\C2D\C3.0-WTS-24 ESC.dwg

Provided to Builders Exchange of WA, Inc. For usage Conditions Agreement see www.bxwa.com - Always Verify Scal

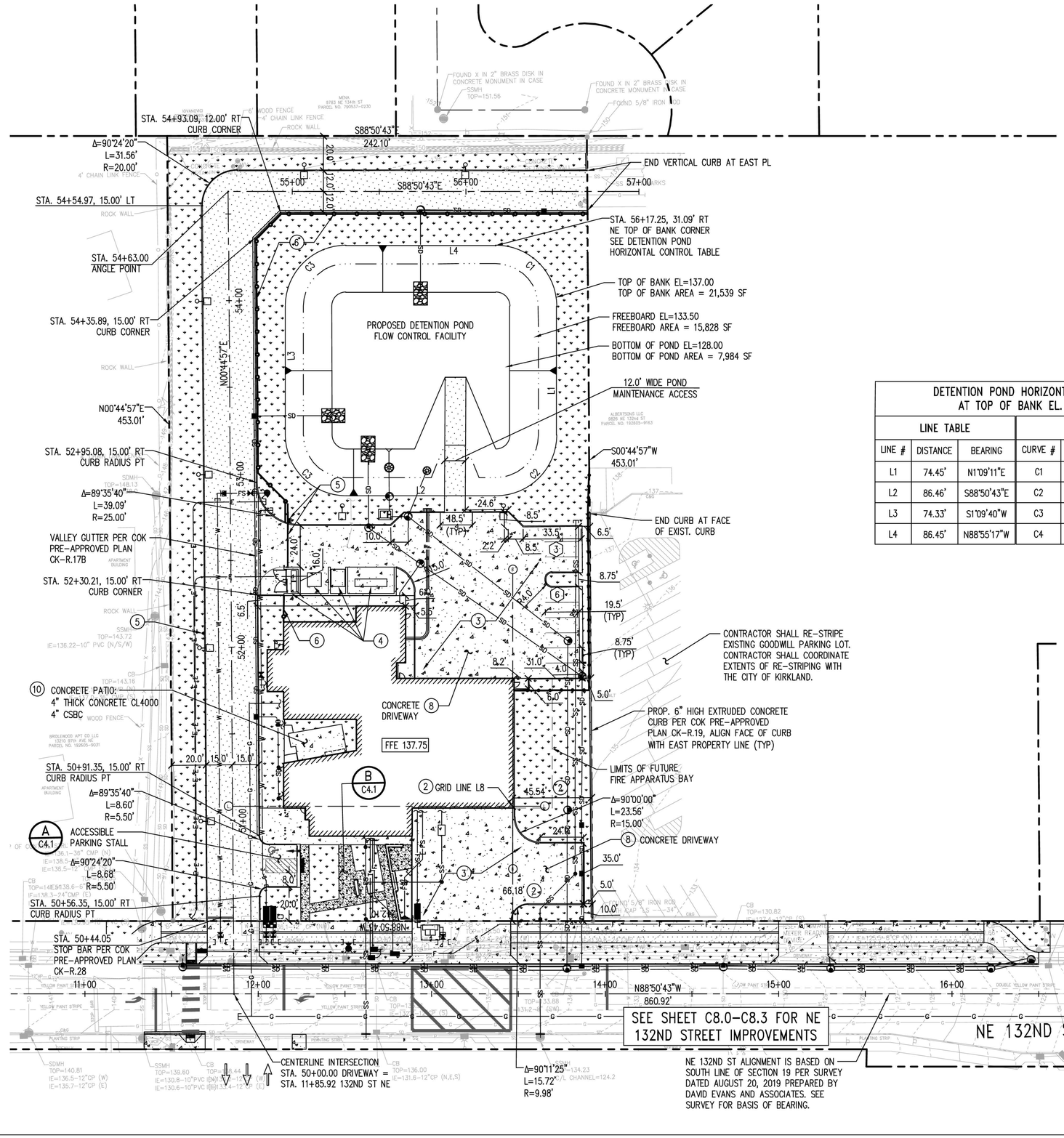

HORIZONTAL CONTROL AND PAVING NOTES:

1. ALL DIMENSIONS ARE TO THE FACE OF CURB, EDGE OF PAVEMENT, CENTERLINE ALIGNMENT, PROPERTY LINE OR FACE OF BUILDING, UNLESS OTHERWISE NOTED.
2. SEE ARCHITECTURAL PLANS FOR BUILDING HORIZONTAL CONTROL AND GRID LINE LOCATION INFORMATION.
3. CONCRETE DRIVEWAY EAST CURB IS PARALLEL TO THE EAST PROPERTY LINE
4. SEE ARCHITECTURAL AND STRUCTURAL PLANS FOR ENCLOSURE DETAILS FOR TRASH, TRANSFORMER, GENERATOR AND GENERATOR SLAB, AND STORAGE AREA. SEE ELECTRICAL PLANS FOR LOCATION AND DETAILS OF ELECTRICAL TRANSFORMER AND GENERATOR EQUIPMENT WITHIN ENCLOSURES.
5. SEE ARCHITECTURAL PLANS FOR CANTILEVER GATE, LOOP SENSORS, AND GATE CONTROLLER DETAILS.
6. SEE ARCHITECTURAL PLANS FOR PROPOSED FENCE TYPE AND DETAILS.
7. SEE LANDSCAPE PLANS FOR PLANTING DETAILS AND TREE LOCATIONS.
8. CONTRACTOR SHALL SUBMIT CONTROL JOINT LAYOUT PLAN FOR REVIEW AND APPROVAL TO OWNER'S REPRESENTATIVE PRIOR TO POURING CONCRETE DRIVEWAY.

   CONCRETE DRIVEWAY:
   - REINFORCED CONCRETE PANELS, USE #4 BARS AT 18" O.C. MAX IN BOTH DIRECTIONS.
   - MAXIMUM JOINT SPACING SHALL BE 15' OR LESS.
   - TRANSVERSE JOINTS SHALL BE DOWLED USING 18" LONG, 1.25" DIAMETER DOWEL BARS AT 12" O.C. AT MID-DEPTH OF SLAB.
   - LONGITUDINAL JOINTS SHALL BE TIED USING 30" LONG, 5/8" DIAMETER BARS AT 36" ON CENTER AT MID DEPTH OF SLAB.
   - ISOLATION JOINTS SHALL BE PROVIDED FOR UTILITY COVERS, LIDS AND GRATES PER WSDOT STANDARD PLAN A-40.15-00
9. SEE ARCHITECTURAL PLANS FOR SIDEWALK SCORING.
10. SEE ARCHITECTURAL PLAN FOR PATIO HORIZONTAL CONTROL.

DETENTION POND HORIZONTAL CONTROL AT TOP OF BANK EL. 137.00

LINE TABLE			CURVE TABLE			
LINE #	DISTANCE	BEARING	CURVE #	DELTA	RADIUS	LENGTH
L1	74.45'	N1°09'11"E	C1	90°04'28"	35.00'	55.02'
L2	86.46'	S88°50'43"E	C2	90°00'07"	35.00'	54.98'
L3	74.33'	S1°09'40"W	C3	90°00'23"	35.00'	54.98'
L4	86.45'	N88°55'17"W	C4	89°55'03"	35.00'	54.93'

LOT COVERAGE AREA TABLE

	EXISTING (SF)	PROPOSED (SF)
BUILDING	25,587	11,775
DRIVEWAY/ PARKING	79,907	43,464
SIDEWALK/ PATIO	0	3,357
LANDSCAPE	4,176	35,316
POND	0	15,758
TOTAL	109,670	109,670

LEGEND

- PROPERTY/ROW LINE
- PROPOSED BUILDING
- CONCRETE SIDEWALK PER COK STD PLAN CK-R.23
- CONCRETE DRIVEWAY, SEE NOTE 8: 9" PCC 6" CSBC
- PERVIOUS CONCRETE SIDEWALK PER COK STD PLAN CK-L.06
- ASPHALT PAVEMENT: 6" HMA PG 58H-22 4" CSBC
- LANDSCAPE AREA
- VERTICAL CURB PER COK STD PLAN CK-R.17C
- 2' WIDE DUAL-FACED CONCRETE TRAFFIC CURB PER WSDOT STD PLAN F-10.12-03
- CURB AND GUTTER PER COK STD PLAN CK-R.17
- (3) PARKING STALL COUNT

811 Call 811 two business days before you dig

TCA
ARCHITECTURE + PLANNING + DESIGN
6211 ROOSEVELT WAY NORTHEAST
SEATTLE, WA 98115
tel: (206) 522-3830
fax: (206) 522-2456

kpff
1601 5th Avenue, Suite 1600
Seattle, WA 98101
206.622.5822
www.kpff.com

JEREMY S. PERRIS
STATE OF WASHINGTON
19847
REGISTERED PROFESSIONAL ENGINEER
7/20/2020

BID SET

No.	Description	Date

Project Title:

FIRE STATION 24
City of Kirkland
Kirkland, Washington

Sheet Title:

HORIZONTAL CONTROL AND PAVING PLAN

Scale: AS NOTED
Project No.: 1700011
Date: JULY 21, 2020

Sheet Number:

C4.0

Z:\1700001-1700999\1700011 (Kirkland Fire Sta 24)\CAD\Design\C0\C4.0KFS-24 HC.dwg
Jul 20, 2020 - 12:20pm tareaod

Provided to Builders Exchange of WA, Inc. For usage Conditions Agreement see www.bxwa.com - Always Verify Scal

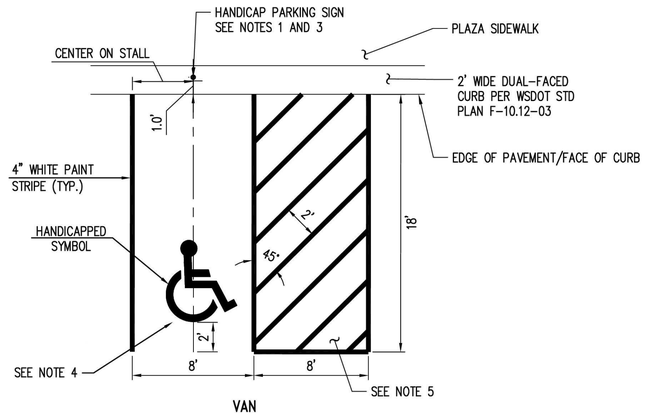

VAN

NOTES:

1. R7-8P "VAN ACCESSIBLE" SIGN SHALL BE INSTALLED AT VAN ACCESSIBLE PARKING SPACE. SIGNS SHALL BE INSTALLED WITH MINIMUM 7' CLEAR FROM PAVEMENT SURFACE TO BOTTOM OF SIGN.
2. AN ACCESS PARKING SPACE SYMBOL, PER WSDOT STD PLAN M-24.60-04 IS REQUIRED FOR EACH ACCESSIBLE PARKING SPACE. A BLUE BACKGROUND AND WHITE BORDER ARE REQUIRED WHEN THE SYMBOL IS INSTALLED ON A CEMENT CONCRETE SURFACE.
3. FIELD VERIFY THE EXACT LOCATION OF THE HANDICAP PARKING SIGN WITH RESPECT TO THE ADA RAMP AND SIDEWALK.
4. ACCESSIBLE PARKING STALL SHALL BE LOCATED TO THE LEFT OR RIGHT OF THE PASSENGER LOADING ZONE, AS SHOWN ON THE PLAN.
5. PASSENGER LOADING ZONE (ACCESS AISLE) SHALL HAVE 1:50 MAXIMUM SLOPE IN ALL DIRECTIONS.

ACCESSIBLE PARKING STALL DETAIL — A / C4.0
NTS

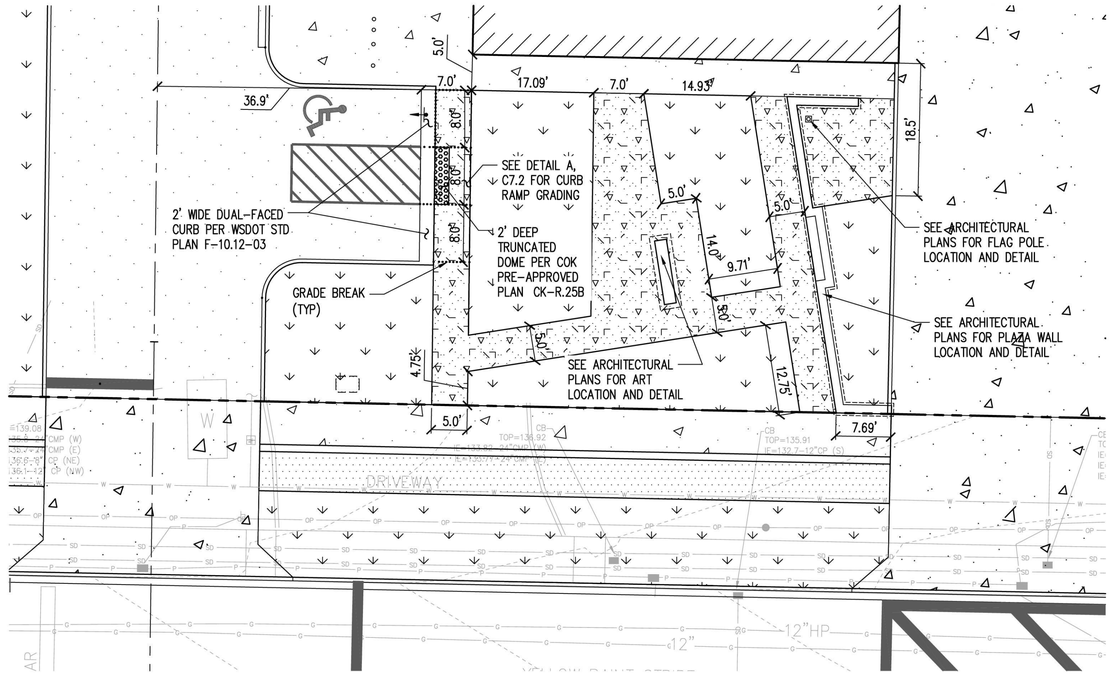

PLAZA HORIZONTAL CONTROL — B / C4.0
1" = 10'

NORTH

811 Call 811 two business days before you dig

TCA
ARCHITECTURE + PLANNING + DESIGN
6211 ROOSEVELT WAY
NORTHEAST
SEATTLE, WA 98115
tel: (206) 522-3830
fax: (206) 522-2456

kpff
1601 5th Avenue, Suite 1600
Seattle, WA 98101
206.622.5822
www.kpff.com

JEREMY S. PERRIS — STATE OF WASHINGTON — 39847 — REGISTERED PROFESSIONAL ENGINEER

7/20/2020

BID SET

No.	Description	Date:

Project Title:

FIRE STATION 24

City of Kirkland
Kirkland, Washington

Sheet Title:

HORIZONTAL CONTROL AND PAVING DETAILS

Scale: **AS NOTED**

Project No. : **1700011**

Date : **JULY 21, 2020**

Sheet Number :

C4.1

Jul 20, 2020 - 1:00pm CharlieC Z:\1700001-1700999\1700011 (Kirkland Fire Sta 24)\CADD\Design\C2D\C4.0&C5-24 HC.dwg

Provided to Builders Exchange of WA, Inc. For usage Conditions Agreement see www.bxwa.com - Always Verify Scal

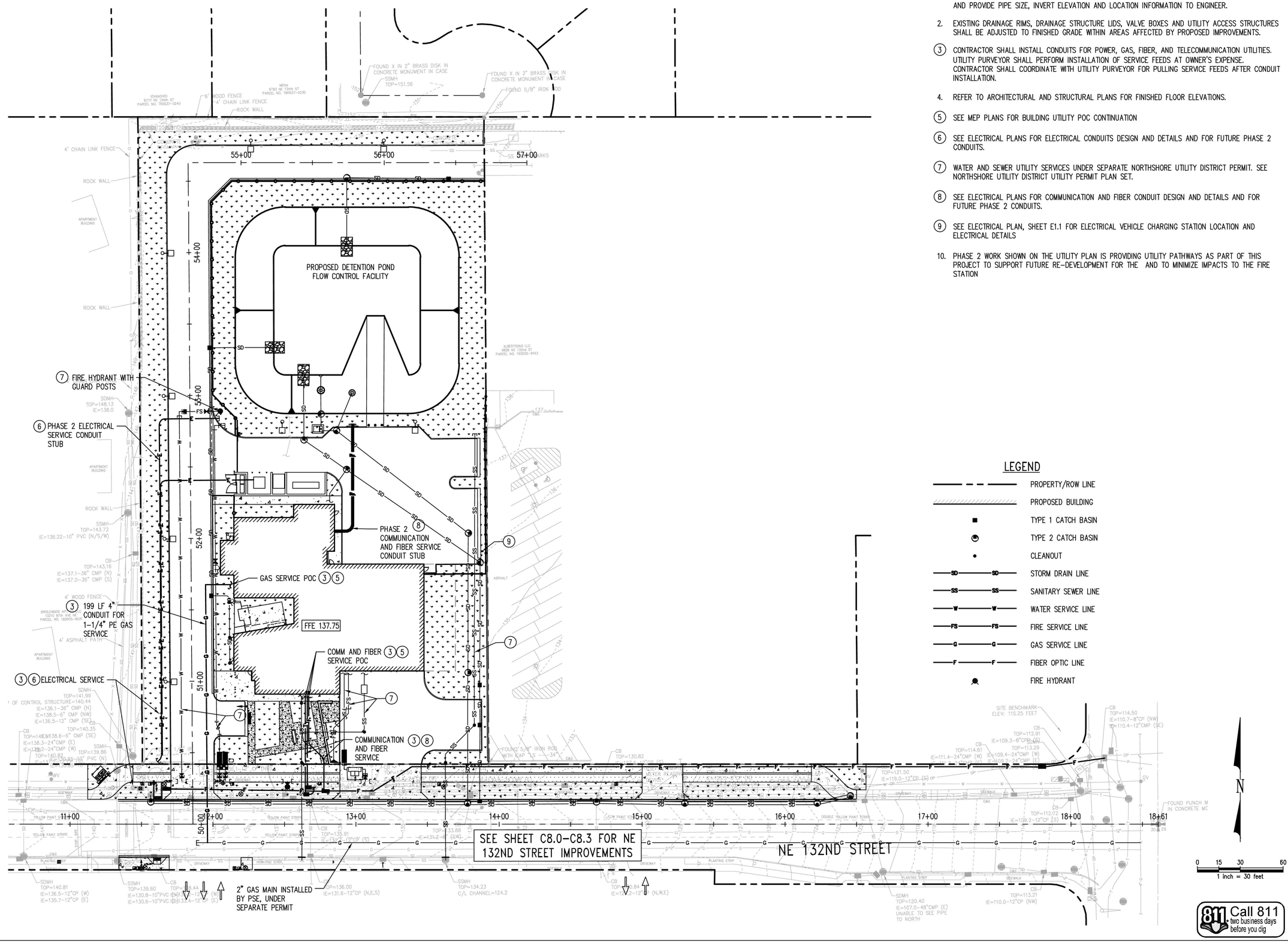

UTILITY NOTES:

1. PRIOR TO ANY SITE CONSTRUCTION CONTRACTOR SHALL POT HOLE UTILITIES AT POINTS OF CONNECTION AND PROVIDE PIPE SIZE, INVERT ELEVATION AND LOCATION INFORMATION TO ENGINEER.
2. EXISTING DRAINAGE RIMS, DRAINAGE STRUCTURE LIDS, VALVE BOXES AND UTILITY ACCESS STRUCTURES SHALL BE ADJUSTED TO FINISHED GRADE WITHIN AREAS AFFECTED BY PROPOSED IMPROVEMENTS.
3. CONTRACTOR SHALL INSTALL CONDUITS FOR POWER, GAS, FIBER, AND TELECOMMUNICATION UTILITIES. UTILITY PURVEYOR SHALL PERFORM INSTALLATION OF SERVICE FEEDS AT OWNER'S EXPENSE. CONTRACTOR SHALL COORDINATE WITH UTILITY PURVEYOR FOR PULLING SERVICE FEEDS AFTER CONDUIT INSTALLATION.
4. REFER TO ARCHITECTURAL AND STRUCTURAL PLANS FOR FINISHED FLOOR ELEVATIONS.
5. SEE MEP PLANS FOR BUILDING UTILITY POC CONTINUATION
6. SEE ELECTRICAL PLANS FOR ELECTRICAL CONDUITS DESIGN AND DETAILS AND FOR FUTURE PHASE 2 CONDUITS.
7. WATER AND SEWER UTILITY SERVICES UNDER SEPARATE NORTHSHORE UTILITY DISTRICT PERMIT. SEE NORTHSHORE UTILITY DISTRICT UTILITY PERMIT PLAN SET.
8. SEE ELECTRICAL PLANS FOR COMMUNICATION AND FIBER CONDUIT DESIGN AND DETAILS AND FOR FUTURE PHASE 2 CONDUITS.
9. SEE ELECTRICAL PLAN, SHEET E1.1 FOR ELECTRICAL VEHICLE CHARGING STATION LOCATION AND ELECTRICAL DETAILS
10. PHASE 2 WORK SHOWN ON THE UTILITY PLAN IS PROVIDING UTILITY PATHWAYS AS PART OF THIS PROJECT TO SUPPORT FUTURE RE-DEVELOPMENT FOR THE AND TO MINIMIZE IMPACTS TO THE FIRE STATION

LEGEND

- PROPERTY/ROW LINE
- PROPOSED BUILDING
- TYPE 1 CATCH BASIN
- TYPE 2 CATCH BASIN
- CLEANOUT
- STORM DRAIN LINE
- SANITARY SEWER LINE
- WATER SERVICE LINE
- FIRE SERVICE LINE
- GAS SERVICE LINE
- FIBER OPTIC LINE
- FIRE HYDRANT

811 Call 811 two business days before you dig

Z:\1700001-1700999\1700011 (Kirkland Fire Sta 24)\2400\Design\C01\C5.0KFS-24 UT.dwg
Jul 20, 2020 - 12:20pm teresad

TCA
ARCHITECTURE + PLANNING + DESIGN
6211 ROOSEVELT WAY NORTHEAST
SEATTLE, WA 98115
tel: (206) 522-3830
fax: (206) 522-2456

kpff
1601 5th Avenue, Suite 1600
Seattle, WA 98101
206.622.5822
www.kpff.com

JEREMY S. PARIS STATE OF WASHINGTON 19847 REGISTERED PROFESSIONAL ENGINEER

7/20/2020

BID SET

No.	Description	Date:

Project Title:

FIRE STATION 24
City of Kirkland
Kirkland, Washington

Sheet Title:

UTILITY PLAN

Scale: **AS NOTED**
Project No. **1700011**
Date: **JULY 21, 2020**

Sheet Number:

C5.0

Provided to Builders Exchange of WA, Inc. For usage Conditions Agreement see www.bxwa.com - Always Verify Scal

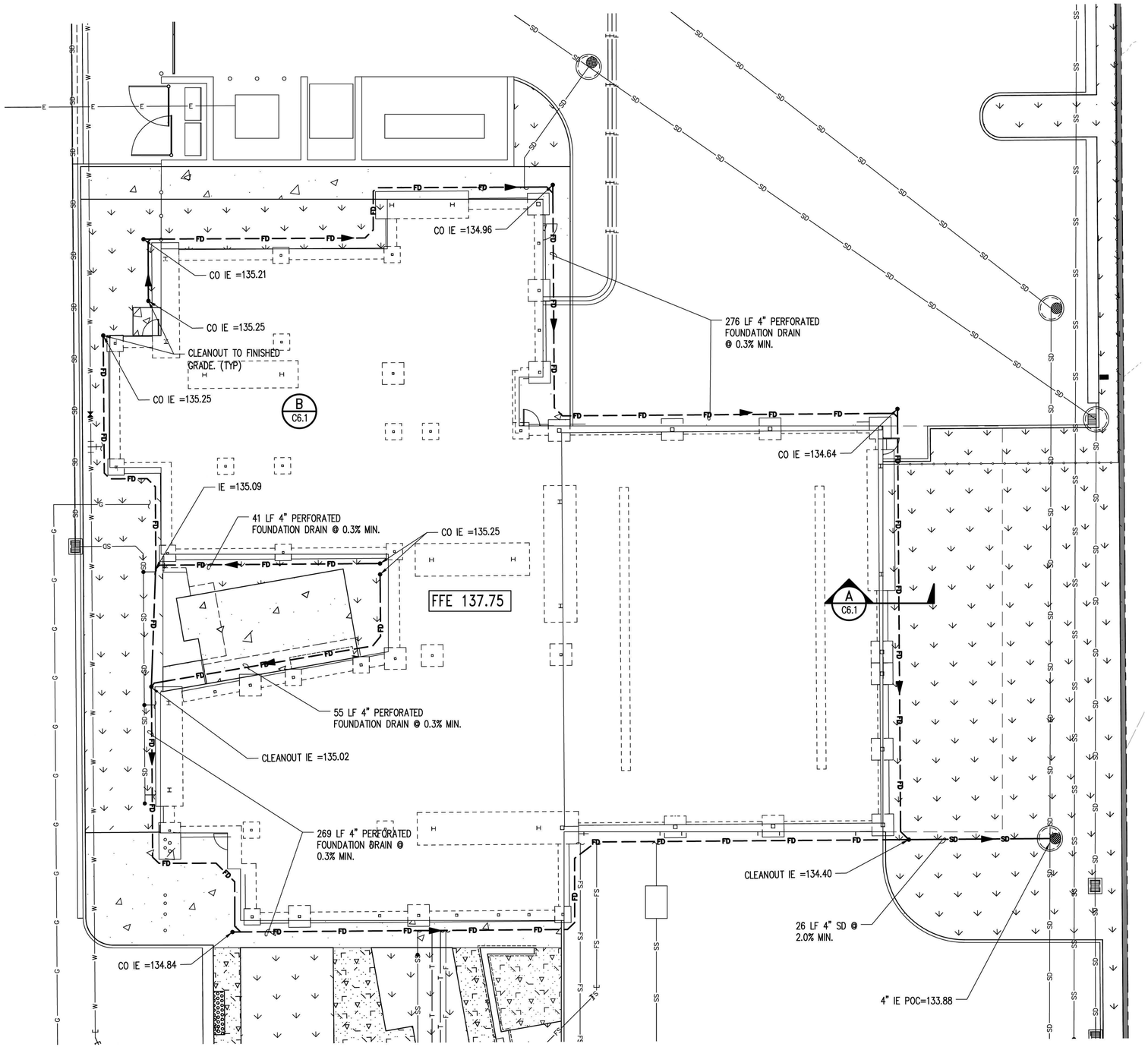

FOUNDATION DRAINAGE NOTES:

1. PRIOR TO CONSTRUCTION, CONTRACTOR SHALL VERIFY LOCATION, SIZE AND ELEVATION OF EXISTING UTILITY POINT CONNECTIONS.
2. FINISHED FLOOR ELEVATIONS SHOWN FOR REFERENCE ONLY. SEE ARCHITECTURAL AND STRUCTURAL PLANS FOR FINISHED FLOOR ELEVATIONS.
3. FOUNDATION AND FOOTING SHOWN FOR REFERENCE ONLY. SEE STRUCTURAL PLANS FOR DESIGN AND DETAILS.
4. CLEANOUTS SHALL BE INSTALLED TO FINISHED GRADE.
5. CONTRACTOR SHALL NOT CONNECT ROOF DRAIN LINES TO FOUNDATION DRAINS.
6. FOUNDATION DRAINS SHALL HAVE DIRECT CONNECTION TO STORM OUTFALL PIPE.

LEGEND

- PROPERTY/ROW LINE
- CONCRETE PAVEMENT
- PERVIOUS CONCRETE PAVEMENT
- LANDSCAPE AREA
- CURB LINE
- STORM DRAIN LINE
- PERFORATED FOUNDATION DRAIN LINE
- CLEANOUT
- FLOW DIRECTION

N

0 5 10 20
1 inch = 10 feet

Call 811 two business days before you dig

TCA
ARCHITECTURE + PLANNING + DESIGN
6211 ROOSEVELT WAY NORTHEAST
SEATTLE, WA 98115
tel: (206) 522-3830
fax: (206) 522-2456

kpff
1601 5th Avenue, Suite 1600
Seattle, WA 98101
206.622.5822
www.kpff.com

KENNETH S. PETERS
STATE OF WASHINGTON
39647
REGISTERED
PROFESSIONAL ENGINEER

7/20/2020

BID SET

No.	Description	Date:

Project Title:

FIRE STATION 24
City of Kirkland
Kirkland, Washington

Sheet Title:

FOUNDATION DRAINAGE PLAN

Scale: **AS NOTED**
Project No. : **1700011**
Date : **JULY 21, 2020**

Sheet Number :

C6.0

Jul 20, 2020 - 12:53pm CharlieC Z:\1700001-1700999\1700011 (Kirkland Fire Sta 24)\CAD\Design\C0\C6.0KFS-24 FD.dwg

Provided to Builders Exchange of WA, Inc. For usage Conditions Agreement see www.bxwa.com - Always Verify Scal

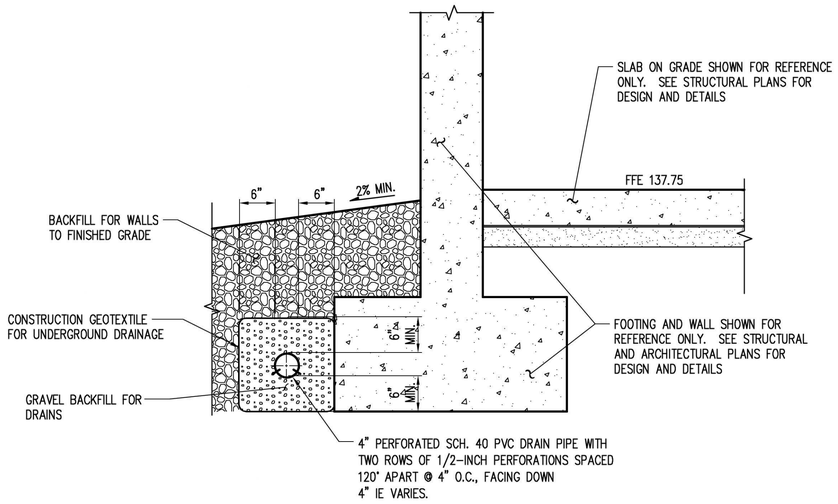

PERIMETER FOOTING DRAIN SECTION — A / C6.0
NTS

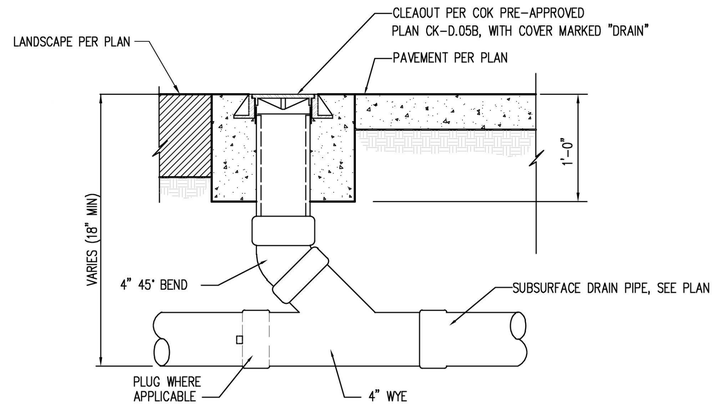

CLEANOUT DETAIL — B / C6.0
NTS

Call 811 two business days before you dig

Jul 20, 2020 - 12:20pm teresad Z:\1700001-1700999\1700011 (Kirkland Fire Sta 24)\CAD\Design\C2D\C6.0&FS-24 FD.dwg

T C A
ARCHITECTURE + PLANNING + DESIGN
6211 ROOSEVELT WAY NORTHEAST
SEATTLE, WA 98115
tel: (206) 522-3830
fax: (206) 522-2456

kpff
1601 5th Avenue, Suite 1600
Seattle, WA 98101
206.622.5822
www.kpff.com

7/20/2020
BID SET

No.	Description	Date:

Project Title:

FIRE STATION 24
City of Kirkland
Kirkland, Washington

Sheet Title:

FOUNDATION DRAINAGE DETAILS

Scale: **AS NOTED**
Project No.: **1700011**
Date: **JULY 21, 2020**

Sheet Number:

C6.1

Provided to Builders Exchange of WA, Inc. For usage Conditions Agreement see www.bxwa.com - Always Verify Scal

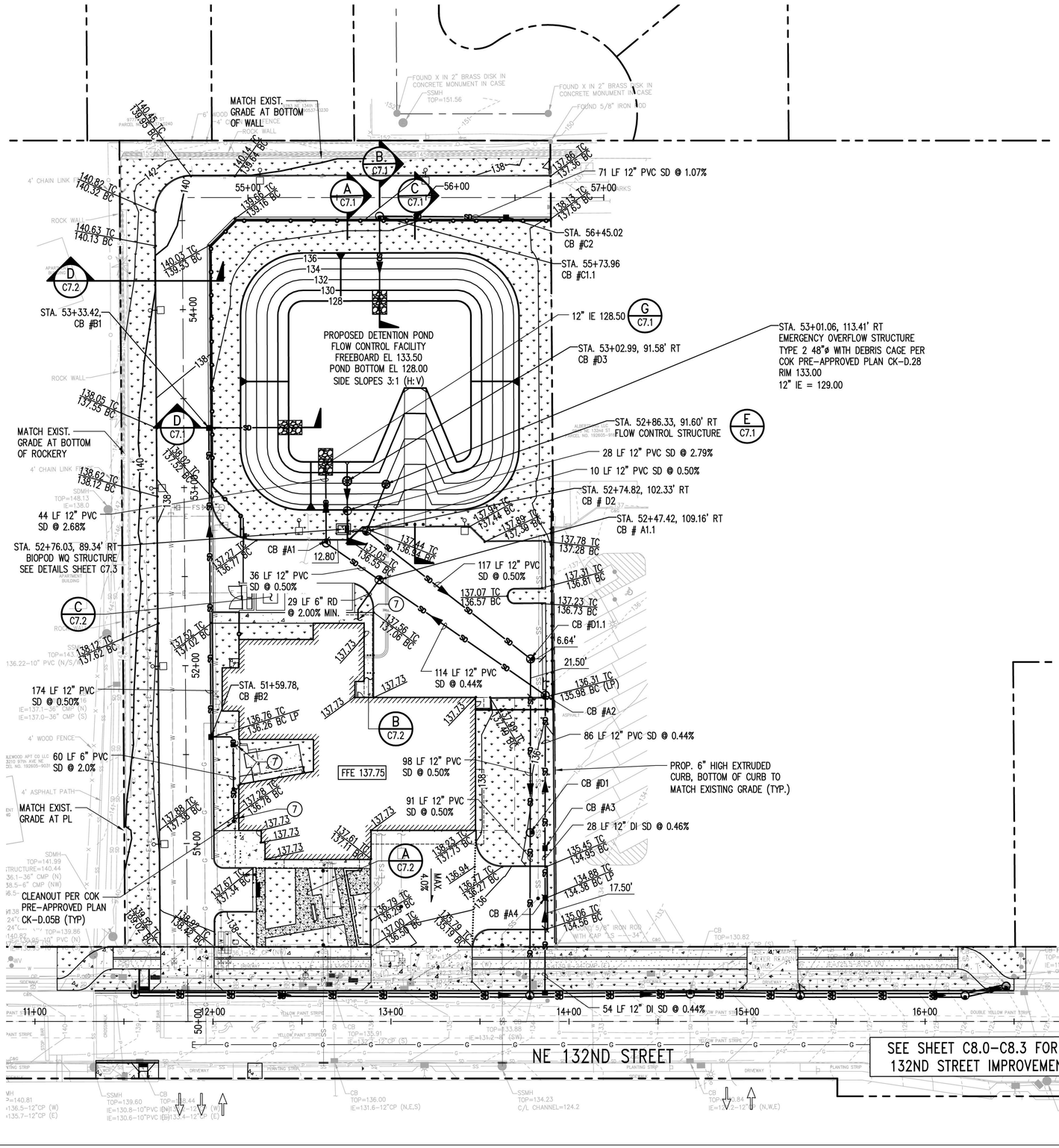

GRADING AND DRAINAGE NOTES:

1. CONTRACTOR SHALL INSTALL CATCH BASINS AT LOW POINTS, AS INDICATED ON THIS PLAN SHEET. FOR CATCH BASINS ADJACENT TO CURBS, CONTRACTOR SHALL ALIGN EDGE OF VANED GRATE TO BE FLUSH WITH ADJACENT BOTTOM OF CURB.
2. ALL DIMENSIONS ARE TO THE FACE OF CURB, EDGE OF PAVEMENT, CENTERLINE ALIGNMENT, PROPERTY LINE OR FACE OF BUILDING, UNLESS OTHERWISE NOTED. DIMENSIONS TO DRAINAGE STRUCTURES ARE TO THE CENTER OF STRUCTURE.
3. SIDEWALK CROSS SLOPES SHALL NOT EXCEED 2.0%.
4. CATCH BASIN AND MANHOLES SHALL BE PER COK STANDARD PLAN CK-D.07 (TYPE 1) AND CK-D.09 (TYPE 2). CATCH BASIN PRECAST COVER, STEPS, HANDHOLDS, AND LADDERS SHALL BE PER COK STANDARD PLAN CK-D.12
5. CATCH BASIN VANED GRATE AND FRAME SHALL BE PER COK STANDARD PLAN CK-D.12 AND CK-D.16A.
6. STORM DRAIN PIPES SHALL BE SOLID WALL PVC SDR35 OR DUCTILE IRON CL50.
7. SEE MEP PLANS FOR BUILDING ROOF DRAIN POC CONTINUATION
8. DIMENSION AND STATIONING FOR DRAINAGE STRUCTURES ARE TO CENTER OF STRUCTURE, UNLESS OTHERWISE NOTED.

DRAINAGE STRUCTURE TABLE

ID	TYPE	COVER	RIM ELEV	NORTH IE	SOUTH IE	EAST IE	WEST IE
A1	TYPE 2, 48"ø	VANED GRATE	136.41	129.68	–	129.68	–
A1.1	TYPE 2, 48"ø	SOLID ROUND	136.95	–	130.36	129.86	129.86
A2	TYPE 2, 48"ø	VANED GRATE	135.98	–	130.36	–	130.36
A3	TYPE 1	VANED GRATE	135.09	130.74	130.74	–	–
A4	TYPE 1	VANED GRATE	134.38	130.87	130.87	–	–
B1	TYPE 1	VANED GRATE	136.95	–	131.24	131.24	–
B2	TYPE 1	VANED GRATE	136.26	132.11	–	132.61	–
C1.1	TYPE 2, 48"ø	VANED GRATE	137.99	–	131.84	131.84	–
C2	TYPE 1	VANED GRATE	136.75	–	–	–	132.60
D1	TYPE 2, 48"ø	SOLID ROUND	135.87	122.29	122.29	–	133.38
D1.1	TYPE 2, 48"ø	SOLID ROUND	136.59	–	122.78	–	122.78
D2	TYPE 2, 48"ø	SOLID ROUND	136.79	128.22	123.37	–	123.37
D3	TYPE 2, 48"ø	DEBRIS CAGE	132.50	128.45	128.45	–	–

LEGEND

- PROPERTY/ROW LINE
- PROPOSED BUILDING
- TOP OF BIORETENTION
- TYPE 1 CATCH BASIN
- TYPE 2 CATCH BASIN
- CLEANOUT PER COK STD PLAN CK-D.05B
- SD — STORM DRAIN LINE
- SS — SANITARY SEWER LINE
- W — WATER SERVICE LINE
- FS — FIRE SERVICE LINE
- G — GAS SERVICE LINE

N

0 15 30 60
1 inch = 30 feet

811 Call 811 two business days before you dig

TCA
ARCHITECTURE + PLANNING + DESIGN
6211 ROOSEVELT WAY NORTHEAST
SEATTLE, WA 98115
tel: (206) 522-3830
fax: (206) 522-2456

kpff
1601 5th Avenue, Suite 1600
Seattle, WA 98101
206.622.5822
www.kpff.com

EXPIRES 10/6/2020 — JAMES S. PETERS — STATE OF WASHINGTON — 39847 — REGISTERED PROFESSIONAL ENGINEER

7/20/2020

BID SET

No.	Description	Date:

Project Title:

FIRE STATION 24
City of Kirkland
Kirkland, Washington

Sheet Title:

GRADING AND DRAINAGE PLAN

Scale: **AS NOTED**
Project No. : **1700011**
Date : **JULY 21, 2020**

Sheet Number :

C7.0

Z:\1700001-1709999\1700011 (Kirkland Fire Sta 24)\CADD\Design\(c0)\C7.0KTS-24 (0).dwg
Jul 20, 2020 - 4:33pm CharlieC

Provided to Builders Exchange of WA, Inc. For usage Conditions Agreement see www.bxwa.com - Always Verify Scal

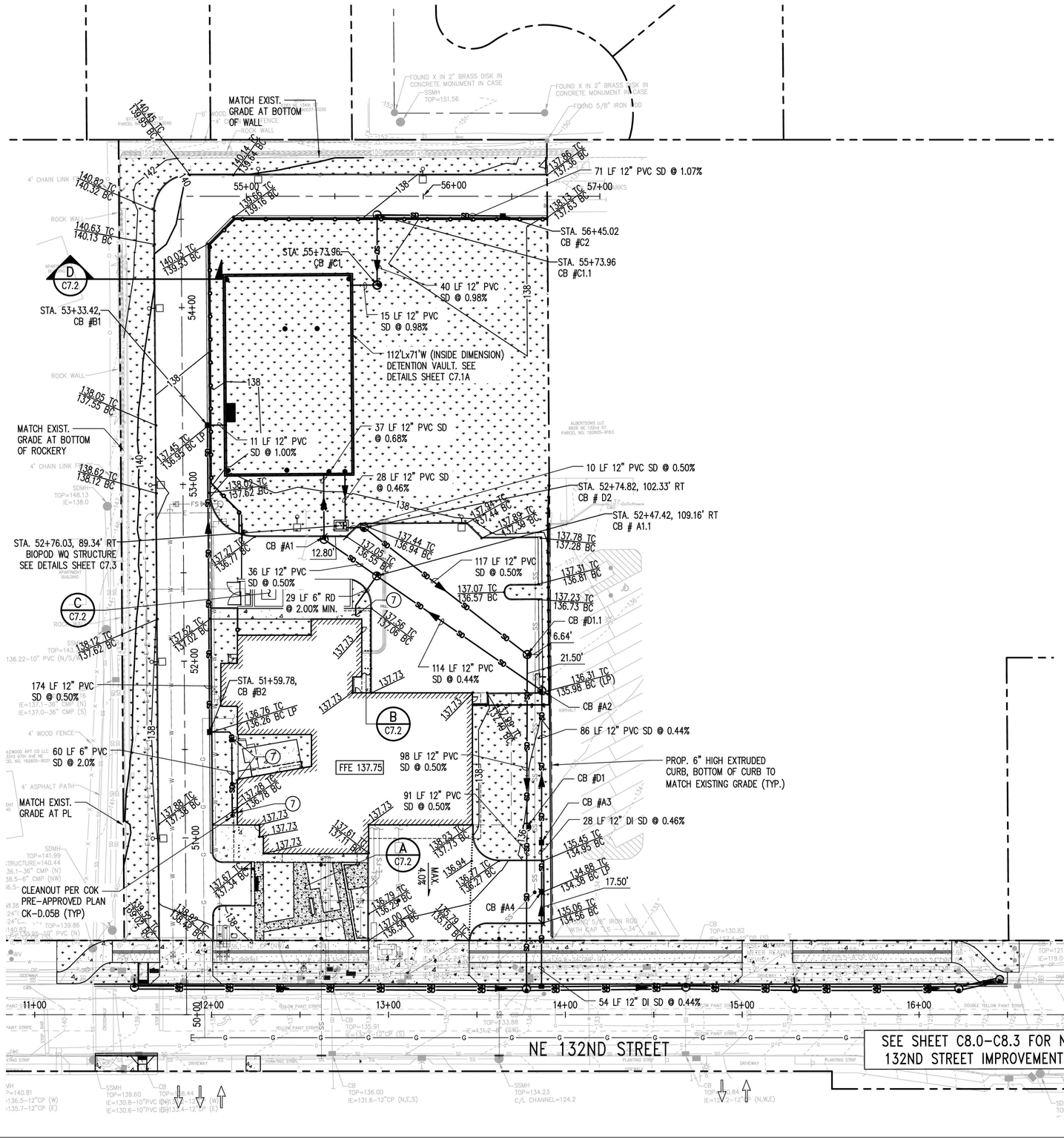

GRADING AND DRAINAGE NOTES:

1. CONTRACTOR SHALL INSTALL CATCH BASINS AT LOW POINTS, AS INDICATED ON THIS PLAN SHEET. FOR CATCH BASINS ADJACENT TO CURBS, CONTRACTOR SHALL ALIGN EDGE OF VANED GRATE TO BE FLUSH WITH ADJACENT BOTTOM OF CURB.
2. ALL DIMENSIONS ARE TO THE FACE OF CURB, EDGE OF PAVEMENT, CENTERLINE ALIGNMENT, PROPERTY LINE OR FACE OF BUILDING, UNLESS OTHERWISE NOTED. DIMENSIONS TO DRAINAGE STRUCTURES ARE TO THE CENTER OF STRUCTURE.
3. SIDEWALK CROSS SLOPES SHALL NOT EXCEED 2.0%.
4. CATCH BASIN AND MANHOLES SHALL BE PER COK STANDARD PLAN CK-D.07 (TYPE 1) AND CK-D.09 (TYPE 2). CATCH BASIN PRECAST COVER, STEPS, HANDHOLDS, AND LADDERS SHALL BE PER COK STANDARD PLAN CK-D.12
5. CATCH BASIN VANED GRATE AND FRAME SHALL BE PER COK STANDARD PLAN CK-D.12 AND CK-D.16A.
6. STORM DRAIN PIPES SHALL BE SOLID WALL PVC SDR35 OR DUCTILE IRON CL50 PER PLAN.
7. SEE MEP PLANS FOR BUILDING ROOF DRAIN POC CONTINUATION
8. DIMENSION AND STATIONING FOR DRAINAGE STRUCTURES ARE TO CENTER OF STRUCTURE, UNLESS OTHERWISE NOTED.

DRAINAGE STRUCTURE TABLE

ID	TYPE	COVER	RIM ELEV	NORTH IE	SOUTH IE	EAST IE	WEST IE
A1	TYPE 2, 48"ø	VANED GRATE	136.41	129.68	–	129.68	–
A1.1	TYPE 2, 48"ø	SOLID ROUND	136.95	–	130.36	129.86	129.86
A2	TYPE 2, 48"ø	VANED GRATE	135.98	–	130.36	–	130.36
A3	TYPE 1	VANED GRATE	135.09	130.74	130.74	–	–
A4	TYPE 1	VANED GRATE	134.38	130.87	130.87	–	–
B1	TYPE 1	VANED GRATE	136.95	–	131.24	131.24	–
B2	TYPE 1	VANED GRATE	136.26	132.11	–	132.61	–
C1	TYPE 2, 48"ø	SOLID ROUND	138.17	130.96	–	–	130.96
C1.1	TYPE 2, 48"ø	VANED GRATE	137.99	–	131.84	131.84	–
C2	TYPE 1	VANED GRATE	136.75	–	–	–	132.60
D1	TYPE 2, 48"ø	SOLID ROUND	135.87	122.29	122.29	–	133.38
D1.1	TYPE 2, 48"ø	SOLID ROUND	136.59	–	122.78	–	122.78
D2	TYPE 2, 48"ø	SOLID ROUND	136.79	–	123.37	–	123.37

LEGEND

- PROPERTY/ROW LINE
- PROPOSED BUILDING
- TYPE 1 CATCH BASIN
- TYPE 2 CATCH BASIN
- CLEANOUT PER COK STD PLAN CK-D.05B
- STORM DRAIN LINE
- SANITARY SEWER LINE
- WATER SERVICE LINE
- FIRE SERVICE LINE
- GAS SERVICE LINE
- GRADE BREAK LINE

811 Call 811 two business days before you dig

TCA
ARCHITECTURE + PLANNING + DESIGN
6211 ROOSEVELT WAY NORTHEAST
SEATTLE, WA 98115
tel: (206) 522-3830
fax: (206) 522-2456

kpff
1601 5th Avenue, Suite 1600
Seattle, WA 98101
206.622.5822
www.kpff.com

JAMES S. PEERS — STATE OF WASHINGTON — 39847 — REGISTERED PROFESSIONAL ENGINEER

7/20/2020

BID SET

No.	Description	Date

Project Title:

FIRE STATION 24
City of Kirkland
Kirkland, Washington

Sheet Title:

GRADING AND DRAINAGE PLAN - BID ALTERNATE DETENTION VAULT

Scale: AS NOTED
Project No. 1700011
Date : JULY 21, 2020

Sheet Number :

C7.0A

Z:\1700001-1700999\1700011 (Kirkland Fire Sta 24)\CAD\Design\C0\C7.0#C5-24 G0.dwg
Jul 20, 2020 - 12:20pm tereood

Provided to Builders Exchange of WA, Inc. For usage Conditions Agreement see www.bxwa.com - Always Verify Scal

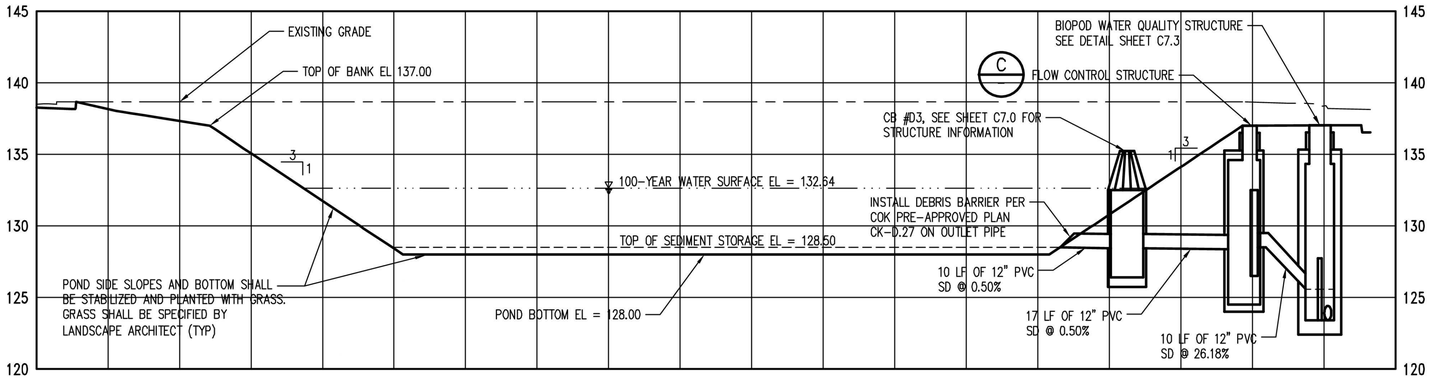

POND OUTLET SECTION

HORIZ: 1" = 10'; VERT: 1" = 5'

A / C7.0

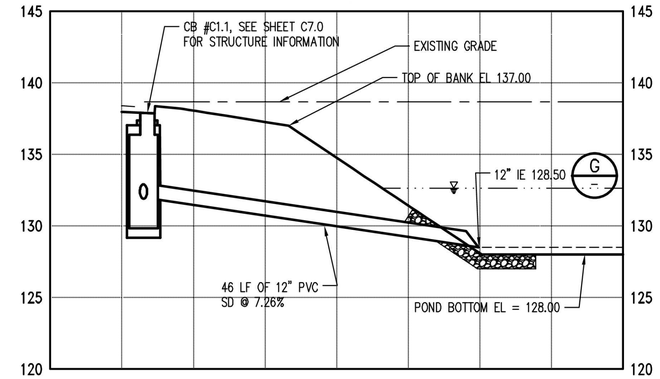

POND INLET SECTION B

HORIZ: 1" = 10'; VERT: 1" = 5'

B / C7.0

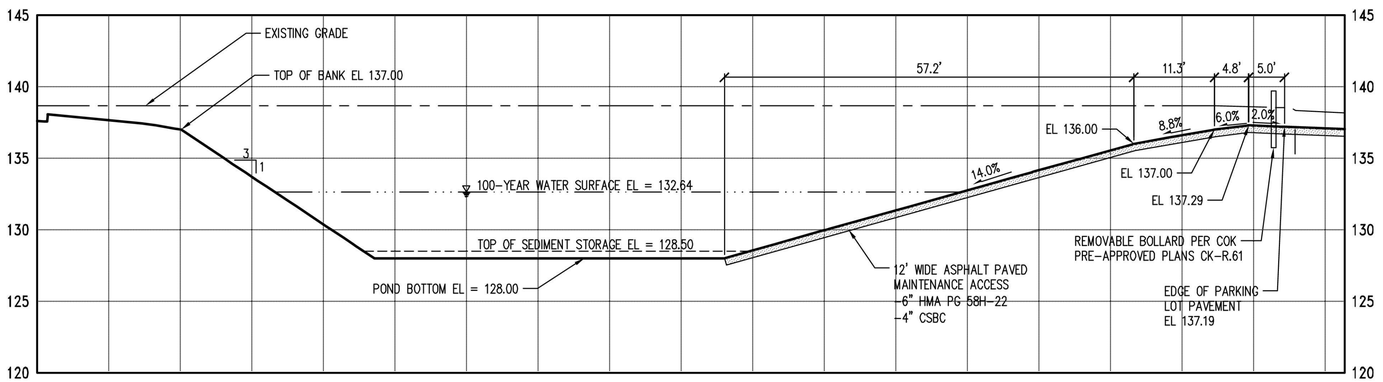

POND ACCESS SECTION

HORIZ: 1" = 10'; VERT: 1" = 5'

C / C7.0

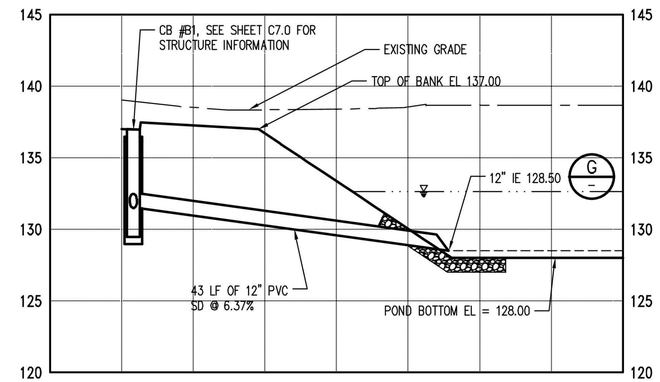

POND INLET SECTION D

HORIZ: 1" = 10'; VERT: 1" = 5'

D / C7.0

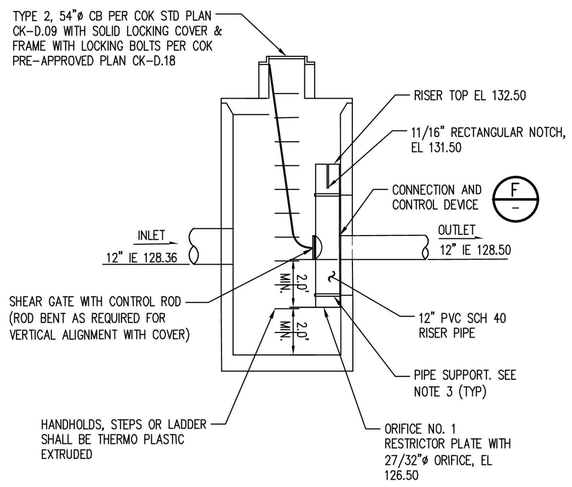

FLOW CONTROL STRUCTURE PER COK STD PLAN CK-D.10

1" = 3'

E / C7.0

FLOW CONTROL STRUCTURE NOTES:

1. ALL METAL PARTS SHALL BE CORROSION RESISTANT ALUMINIZED STEEL OR ALUMINUM. GALVANIZED MATERIALS SHALL NOT BE USED.
2. FRAME AND LADDER OR STEPS OFFSET SO:
   - A CLEANOUT GATE IS VISIBLE FROM TOP
   - B CLIMB-DOWN SPACE IS CLEAR OF RISER AND CLEANOUT GATE
   - C FRAME IS CLEAR OF CURB (IF APPLICABLE)
3. PROVIDE 3 X 0.090 GAUGE SUPPORT BRACKET ANCHORED TO CONCRETE WALL WITH 5/8" STAINLESS STEEL EXPANSION BOLTS OR EMBEDDED SUPPORTS 2" INTO MH WALL (VERTICAL SPACING).
4. LOCATE ELBOW RESTRICTOR(S) TO PROVIDE MINIMUM 2' CLEARANCE FROM STEPS, LADDER, SIDE OF VAULT, OR INLET PIPES.
5. STRUCTURE SHALL RESIST GROUNDWATER INTRUSION. STRUCTURE AND ALL CONNECTION JOINTS SHALL BE WATERTIGHT.

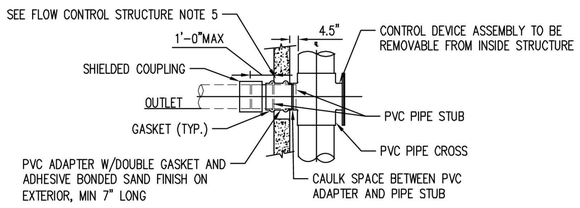

CONNECTION AND CONTROL DEVICE

1"= 3'

F / –

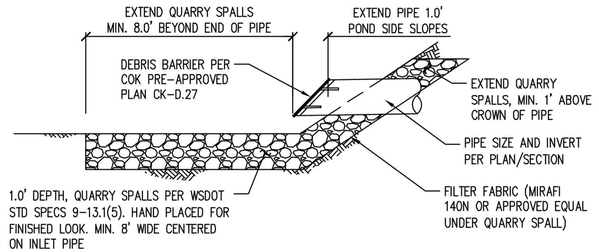

POND INLET PROTECTION DETAIL

1"= 2'

G / C7.0

TCA
ARCHITECTURE + PLANNING + DESIGN
6211 ROOSEVELT WAY NORTHEAST
SEATTLE, WA 98115
tel: (206) 522-3830
fax: (206) 522-2456
kpff
1601 5th Avenue, Suite 1600
Seattle, WA 98101
206.622.5822
www.kpff.com

JEREMY S. PERRIS
STATE OF WASHINGTON
19847
REGISTERED PROFESSIONAL ENGINEER

7/20/2020

BID SET

No.	Description	Date

Project Title:

FIRE STATION 24

City of Kirkland
Kirkland, Washington

Sheet Title:

DETENTION POND SECTION AND DETAILS

Scale: AS NOTED
Project No. 1700011
Date : JULY 21, 2020

Sheet Number :

C7.1

Z:\1700001-1700999\1700011 (Kirkland Fire Sta 24)\CADD\Design\C07\C7.1WKS-24 QD SECT.dwg
Jul 20, 2020 - 12:20pm teresad

Provided to Builders Exchange of WA, Inc. For usage Conditions Agreement see www.bxwa.com - Always Verify Scal

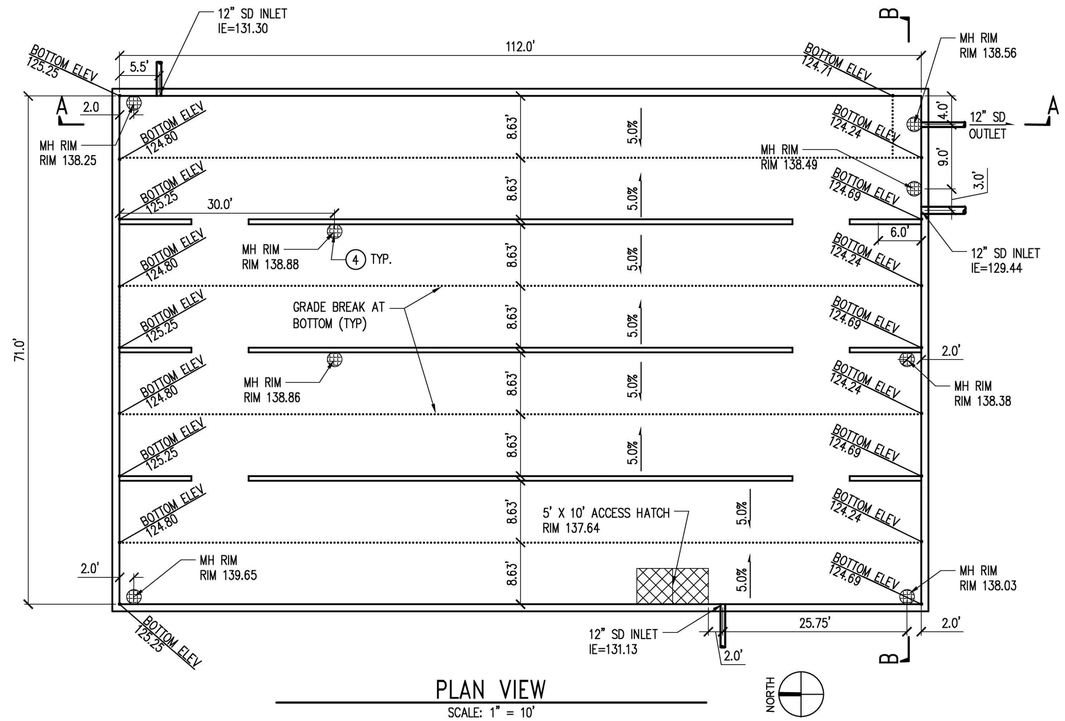

PLAN VIEW
SCALE: 1" = 10'

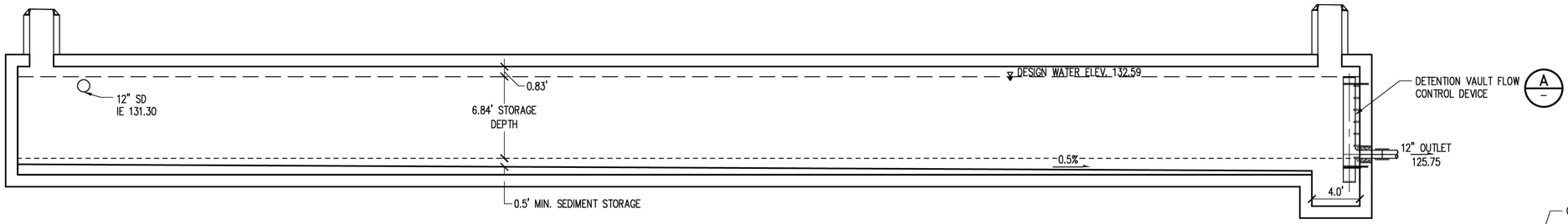

SECTION A – A
SCALE: 1" = 5'

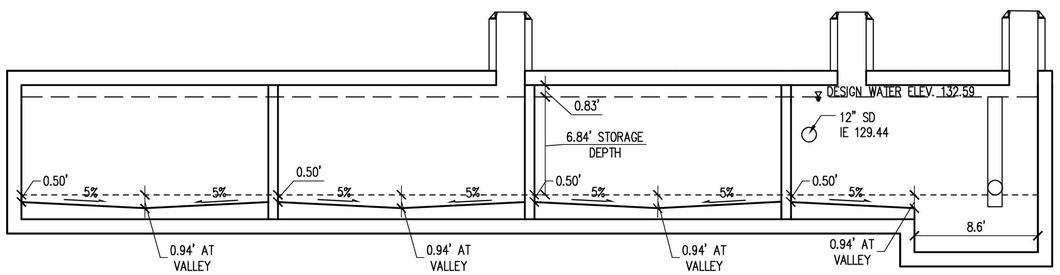

SECTION B – B
SCALE: 1" = 5'

DETENTION VAULT NOTES:

1. SEE DETENTION VAULT STRUCTURAL PLANS VS0.1–VS4.1 FOR VAULT CONSTRUCTION DETAILS. INFORMATION SHOWN ON THIS PLAN IS INTENDED TO DOCUMENT GEOMETRIC CRITERIA ONLY.
2. DIMENSIONS SHOWN ARE TO CENTER OF PIPE, CENTER OF MANHOLE COVER, OR INSIDE OF VAULT, UNLESS OTHERWISE NOTED.
3. ALL SURFACE GRATES AND COVERS SHALL MEET HS20 TRAFFIC LOAD RATING.
4. (4) ACCESS MANHOLES SHALL HAVE 24" MANHOLE FRAME WITH LOCKING COVER PER COK PRE–APPROVED PLAN CK–D.18. ACCESS MANHOLES SHALL HAVE HANDHOLDS AND STEPS PER COK STANDARD PLAN CK–D.12
5. STRUCTURE SHALL RESIST GROUND WATER INTRUSION. STRUCTURE AND ALL CONNECTION JOINTS SHALL BE WATERTIGHT. PIPE PENETRATIONS INTO AND OUT OF THE VAULT SHALL INCLUDE LINK–SEAL MODEL C MODULAR SEALS OR APPROVED EQUAL.
6. ALL DETENTION VAULT METAL PARTS SHALL BE CORROSION RESISTANT. GALVANIZED MATERIALS SHALL NOT BE USED. ALL PIPE AND BENDS SHALL HAVE FIELD LOK GASKET RESTRAINED JOINTS (OR EQUAL) UNLESS OTHERWISE NOTED.

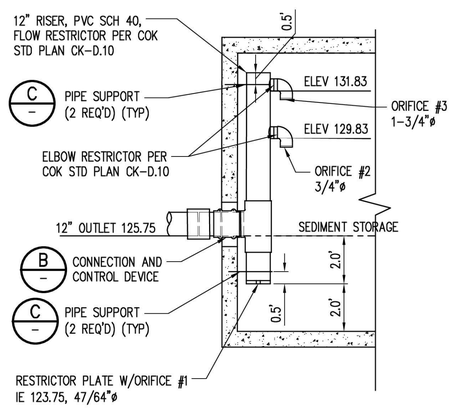

DETENTION VAULT FLOW CONTROL DEVICE DETAIL
A
1"=3'

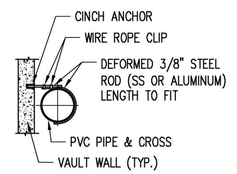

PIPE SUPPORT
C
1"=3'

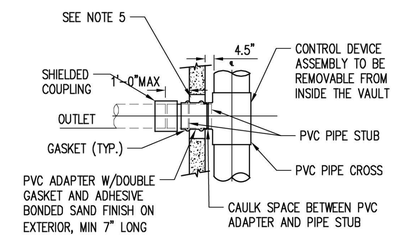

CONNECTION AND CONTROL DEVICE
B
1"=3'

TCA
ARCHITECTURE + PLANNING + DESIGN
6211 ROOSEVELT WAY
NORTHEAST
SEATTLE, WA 98115
tel: (206) 522-3830
fax: (206) 522-2456

kpff
1601 5th Avenue, Suite 1600
Seattle, WA 98101
206.622.5822
www.kpff.com

JEREMY S. PETERS
STATE OF WASHINGTON
39847
REGISTERED
PROFESSIONAL ENGINEER
7/20/2020

BID SET

No.	Description	Date:

Project Title:

FIRE STATION 24
City of Kirkland
Kirkland, Washington

Sheet Title:

BID ALTERNATE DETENTION VAULT DETAILS

Scale: AS NOTED
Project No.: 1700011
Date: JULY 21, 2020

Sheet Number:

C7.1A

Z:\1700001-1700899\1700011 (Kirkland Fire Sta 24)\C400\Design\C07\C7.1VS-24 GD SECT.dwg
Jul 20, 2020 - 12:20pm teresad

Provided to Builders Exchange of WA, Inc. For usage Conditions Agreement see www.bxwa.com - Always Verify Scal

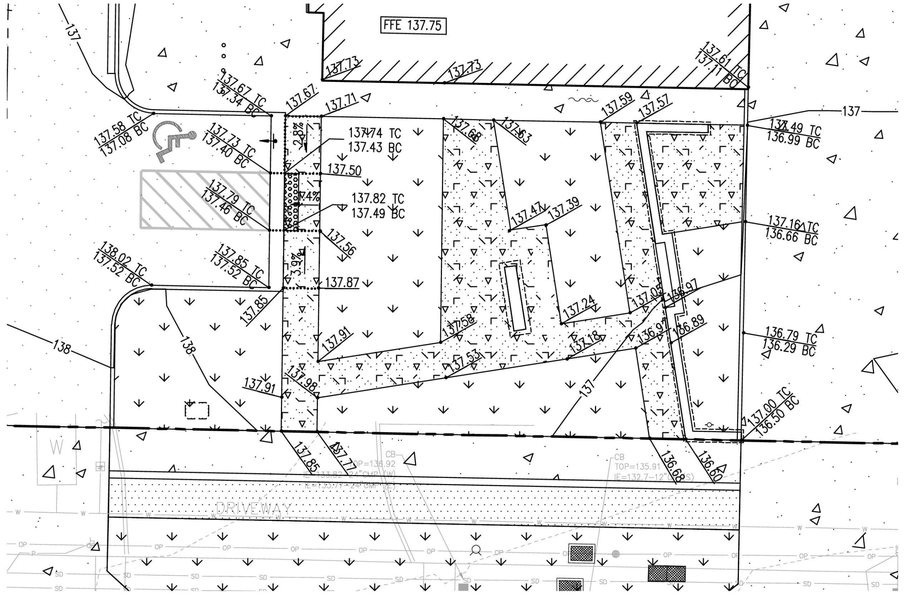

PLAZA GRADING DETAIL
1" = 10'
A
C7.0
NORTH

FIRE FIGHTER
ENTRY GRADING DETAIL
1" = 10'
B
C7.0
NORTH

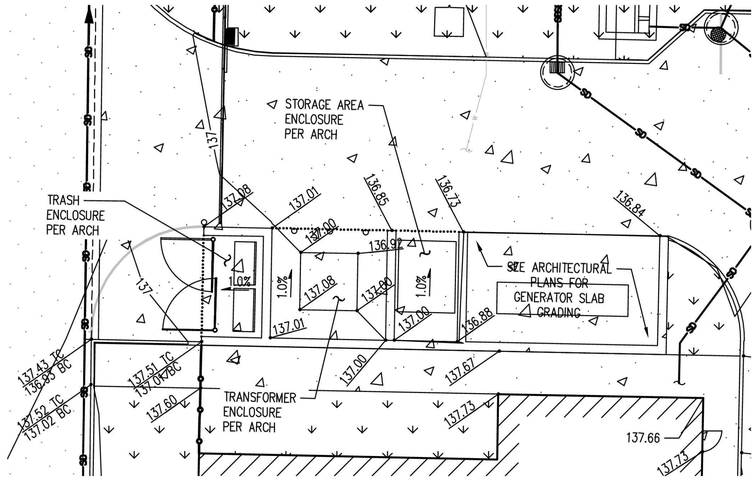

ENCLOSURE GRADING DETAIL
1" = 10'
C
C7.0
NORTH

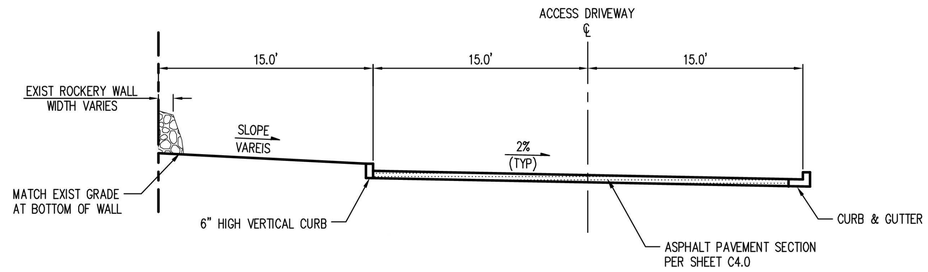

ACCESS DRIVEWAY
TYPICAL SECTION
SCALE: 1" = 5'
D
C7.0A

811 Call 811 two business days before you dig

TCA
ARCHITECTURE + PLANNING + DESIGN
6211 ROOSEVELT WAY
NORTHEAST
SEATTLE, WA 98115
tel: (206) 522-3830
fax: (206) 522-2456

kpff
1601 5th Avenue, Suite 1600
Seattle, WA 98101
206.622.5822
www.kpff.com

LICENSED STRUCTURAL ENGINEER
STATE OF WASHINGTON
19847
REGISTERED
PROFESSIONAL ENGINEER

7/20/2020

BID SET

No.	Description	Date

Project Title:

FIRE STATION 24
City of Kirkland
Kirkland, Washington

Sheet Title:

PLAZA, SIDEWALK AND ENCLOSURE GRADING DETAIL

Scale: **AS NOTED**
Project No. **1700011**
Date : **JULY 21, 2020**

Sheet Number :

C7.2

Jul 20, 2020 - 12:20pm teresad Z:\1700001-1700999\1700011 (Kirkland Fire Sta 24)\CADD\Design\C0\C7.2AKS-24 GD DET.dwg

Provided to Builders Exchange of WA, Inc. For usage Conditions Agreement see www.bxwa.com - Always Verify Scal

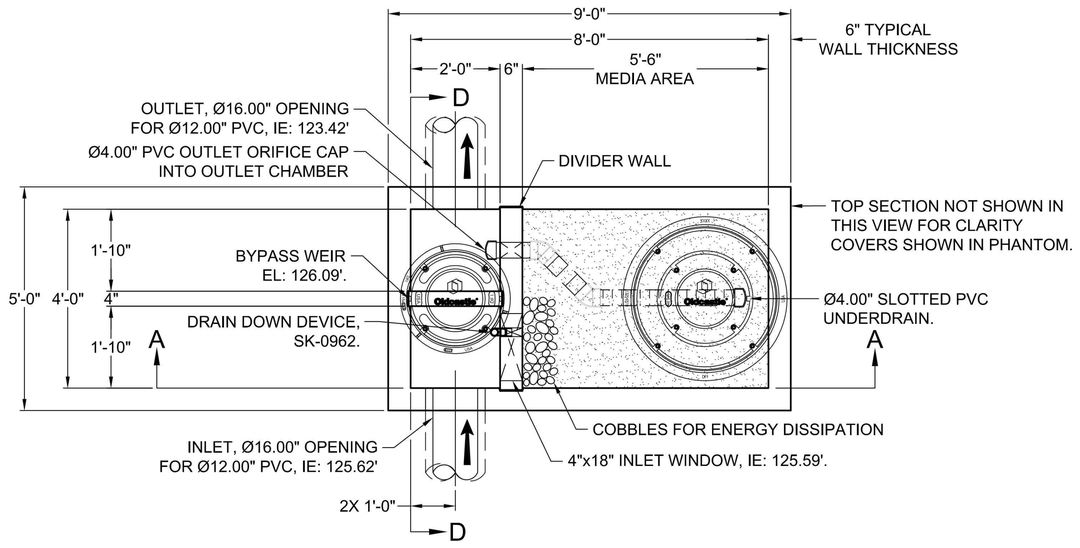

PLAN VIEW

SITE SPECIFIC DATA				
Structure ID				
Model Size				BPU-48IB
Orientation (Left or Right)				LEFT
Treatment Flow Rate (cfs)				0.033
Peak Flow Rate (cfs)				0.862
Rim Elevation				137.10
Pipe Data	Pipe Location (Front or Side)	Pipe Size	Pipe Type	Invert Elevation
Inlet	FRONT	12"	PER PLAN	125.62
Outlet	SIDE	12"	PER PLAN	123.42
Notes:				
TREATMENT FLOW RATE BASED ON 2-YR RELEASE RATE DOWNSTREAM OF DETENTION FACILITY				

NOTES:

1. PRIOR TO CONSTRUCTION, CONTRACTOR SHALL PROVIDE SUBMITTAL OF BIOPOD BIOFILTER VAULT STRUCTURE FROM OLDCASTLE INFRASTRUCTURE TO ENGINEER FOR REVIEW AND APPROVAL. INFORMATION SHOWN ON THIS PLAN IS INTENDED TO DOCUMENT WATER QUALITY DESIGN FLOW RATE, INLET AND OUTLET PIPE SIZE, TYPE AND INVERT ELEVATIONS AND RIM ELEVATIONS.
2. BIOPOD BIOFILTER SHALL BE DESIGNED FOR OUTRIGGER LOADS.
3. CONTRACTOR SHALL INSTALL BIOPOD BIOFILTER PER MANUFACTURER REQUIREMENTS AND SPECIFICATIONS.

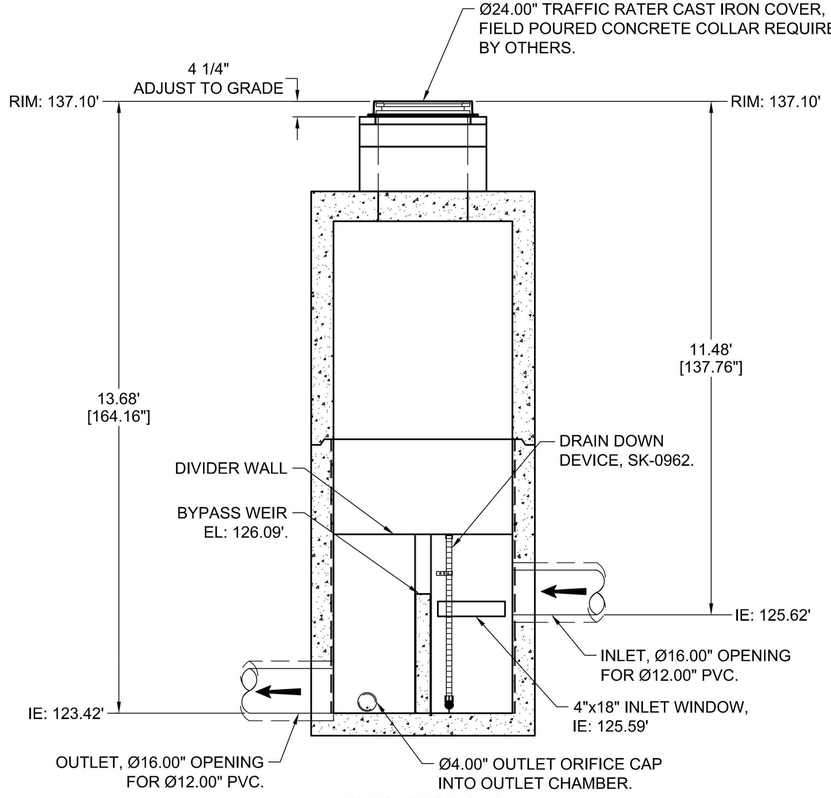

SECTION D-D

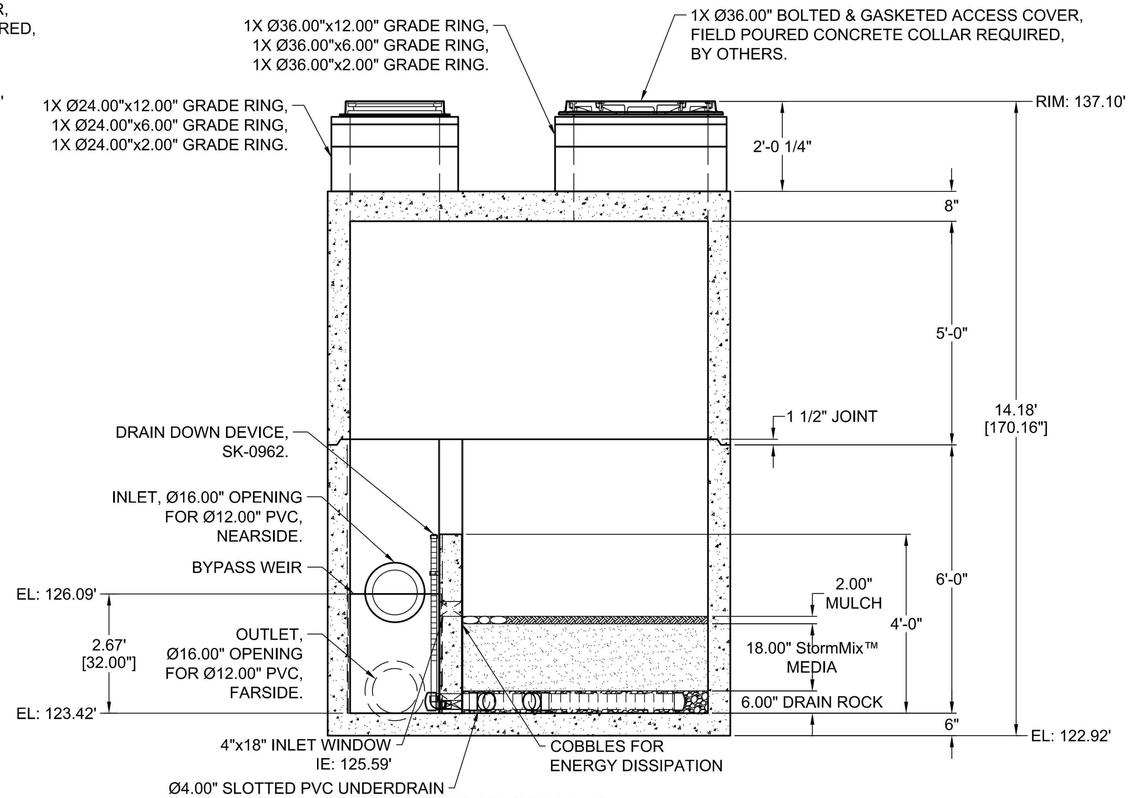

SECTION A-A

PROPRIETARY DRAINAGE INFRASTRUCTURE NOTE: THIS SHEET IS PROVIDED FOR CONFIRMATION OF CONSISTENCY WITH DESIGN ONLY. MANUFACTURER IS SOLELY RESPONSIBLE FOR THEIR PRODUCT AND SPECIFICATIONS

WATER QUALITY TREATMENT BIOPOD BIOFILTER DETAIL

NTS

B
C7.0

TCA
ARCHITECTURE + PLANNING + DESIGN
6211 ROOSEVELT WAY
NORTHEAST
SEATTLE, WA 98115
tel: (206) 522-3830
fax: (206) 522-2456

kpff
1601 5th Avenue, Suite 1600
Seattle, WA 98101
206.622.5822
www.kpff.com

JEREMY S. PETERS
STATE OF WASHINGTON
39847
REGISTERED
PROFESSIONAL ENGINEER

7/20/2020

BID SET

No.	Description	Date:

Project Title:

FIRE STATION 24

City of Kirkland
Kirkland, Washington

Sheet Title:

WATER QUALITY TREATMENT DETAIL - BIOPOD BIOFILTER

Scale: AS NOTED
Project No.: 1700011
Date: JULY 21, 2020

Sheet Number:

C7.3

Call 811 two business days before you dig

Z:\1700001-1700999\1700011 (Kirkland Fire Sta 24)\CAD\Design\C07_DWKS-24 QD DET.dwg
Jul 20, 2020 - 12:20pm teresad

Provided to Builders Exchange of WA, Inc. For usage Conditions Agreement see www.bxwa.com - Always Verify Scal

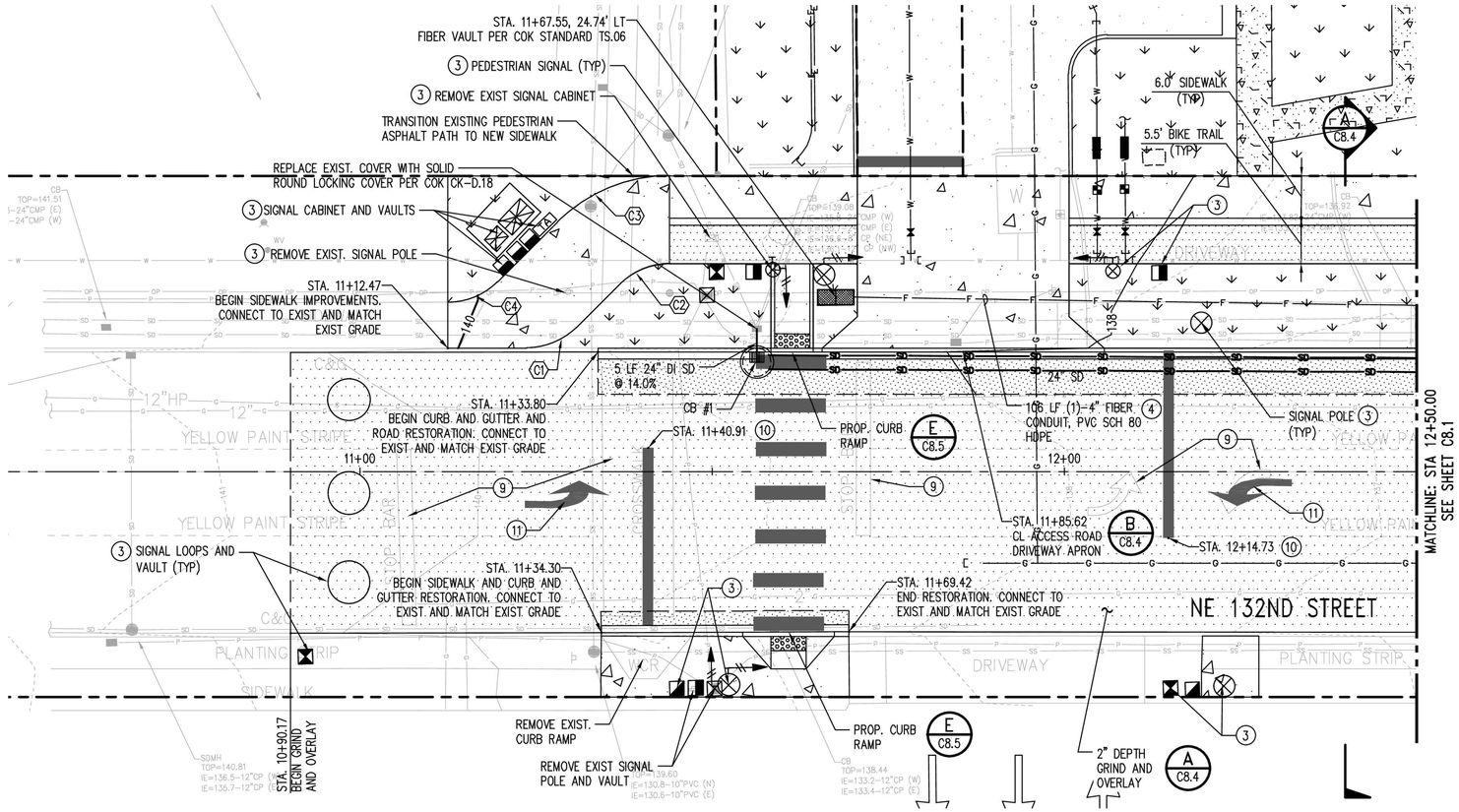

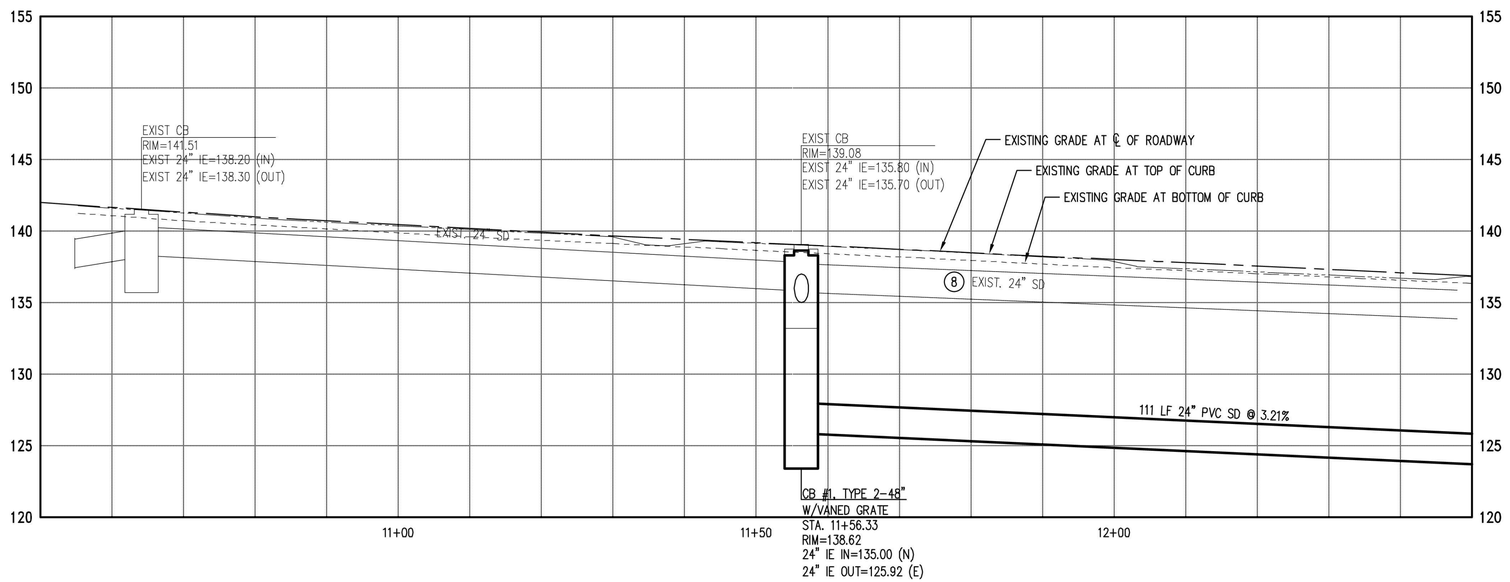

CONSTRUCTION NOTES:

1. CONTRACTOR SHALL LOCATE ALL EXISTING UTILITIES PRIOR TO CONSTRUCTION.
2. EXISTING BELOW AND ABOVE GRADE UTILITIES SHALL REMAIN UNLESS OTHERWISE NOTED. ANY UTILITIES DAMAGED THAT ARE INTENDED TO REMAIN SHALL BE RESTORED AT THE CONTRACTOR'S EXPENSE.
3. SEE SIGNAL PLANS FOR SIGNAL INFRASTRUCTURE DETAILS, CONDUITS, AND SIGNAGE. COORDINATE FINAL LOCATIONS IN THE FIELD WITH CITY OF KIRKLAND AND TRAFFIC ENGINEER.
4. CONTRACTOR SHALL INSTALL VAULTS AND CONDUITS FOR FIBER AND TELECOMMUNICATION UTILITIES. UTILITY PURVEYOR SHALL PERFORM INSTALLATION OF SERVICE FEEDS AT OWNER'S EXPENSE. CONTRACTOR SHALL COORDINATE WITH UTILITY PURVEYOR FOR PULLING SERVICE FEEDS AFTER CONDUIT INSTALLATION.
5. UTILITY VAULT COVERS LOCATED WITHIN PAVEMENT AREAS SHALL BE TRAFFIC RATED.
6. EXISTING UTILITY STRUCTURE LIDS AND COVERS SHALL BE ADJUSTED TO MATCH FINISHED GRADES.
7. CONTRACTOR SHALL RESTORE EXISTING RIGHT OF WAY IMPROVEMENTS DAMAGED DURING CONSTRUCTION OF PROPOSED UTILITIES IN THE RIGHT OF WAY BEYOND LIMITS OF PROJECT FRONTAGE.
8. REMOVE EXISTING CATCH BASIN. PLUG AND ABANDON EXISTING STORM MAIN AND FILL WITH CEMENT PER COK STANDARDS. CONTRACTOR SHALL COORDINATE REMOVAL OF EXISTING STORM MAIN FOR INSTALLATION OF PROPOSED SIGNAL AND UTILITY INFRASTRUCTURE.
9. REMOVE EXISTING STOP BAR AND TURN ARROW PAVEMENT MARKINGS.
10. STOP BAR AND CROSS WALK PER COK STANDARD PLAN CK-R.28.
11. LEFT TURN ARROW PER COK STANDARD PLAN CK-R.30. COORDINATE FINAL LOCATIONS IN THE FIELD WITH CITY OF KIRKLAND AND TRAFFIC ENGINEER.
12. STORM DRAIN PIPES IN PUBLIC RIGHT OF WAY SHALL BE DUCTILE IRON CL50 OR SOLID WALL PVC SDR35. KOR-N-SEAL BOOT WITH CORRUGATED PIPE ADAPTER OR APPROVED EQUAL SHALL BE REQUIRED FOR NEW PIPE CONNECTIONS TO DRAINAGE STRUCTURES.
13. PIPE ABANDONMENT SHALL BE LOCATED OUTSIDE OF STRUCTURE TO ELIMINATE PIPE PROTRUSION.

CURVE DATA TABLE - 1			
RADIUS	ANGLE		LENGTH
10.3'	43°36'10"		7.83'
PC 11+23.65, 17.54' LT		EL	139.71'
1/2 POINT		EL	139.73'
PT 11+30.72, 20.45' LT		EL	139.75' EG

CURVE DATA TABLE - 2			
RADIUS	ANGLE		LENGTH
10.0	44°53'06"		7.83'
PC 11+36.88, 26.58' LT		EL	139.50'
1/2 POINT		EL	139.64'
PT 11+43.94, 29.50' LT		EL	139.78'

CURVE DATA TABLE - 3			
RADIUS	ANGLE		LENGTH
22.6'	44°43'29"		17.62'
PC 11+43.93, 42.00' LT		EL	139.72' EG
1/2 POINT		EL	139.97 EG
PT 11+28.06, 35.44' LT		EL	140.00' EG

CURVE DATA TABLE - 4			
RADIUS	ANGLE		LENGTH
9.9'	45°25'19"		7.85
PC 11+19.52, 26.93' LT		EL	139.90'
1/2 POINT		EL	139.96'
PT 11+12.47, 24.02' LT		EL	140.13' EG

LEGEND

- PROPERTY/ROW LINE
- TYPE 1 CATCH BASIN
- TYPE 2 CATCH BASIN
- CLEANOUT
- STORM DRAIN LINE
- SANITARY SEWER LINE
- WATER SERVICE LINE
- FIRE SERVICE LINE
- GAS SERVICE LINE
- CONCRETE PAVEMENT
- ASPHALT PAVEMENT
- GRIND AND OVERLAY
- BIKE TRAIL
- LANDSCAPE AREA
- CURB AND GUTTER PER COK STD PLAN CK-R17
- SAWCUT

N

0 5 10 20
1 inch = 10 ft. HORZ
0 2.5 5 10
1 inch = 5 ft. VERT

Call 811 two business days before you dig

TCA
ARCHITECTURE + PLANNING + DESIGN
6211 ROOSEVELT WAY NORTHEAST
SEATTLE, WA 98115
tel: (206) 522-3830
fax: (206) 522-2456

kpff
1601 5th Avenue, Suite 1600
Seattle, WA 98101
206.622.5822
www.kpff.com

JEREMY S. PARIS — STATE OF WASHINGTON — 19847 — REGISTERED PROFESSIONAL ENGINEER
7/20/2020
BID SET

No.	Description	Date

Project Title:

FIRE STATION 24
City of Kirkland
Kirkland, Washington

Sheet Title:

NE 132ND STREET PLAN & PROFILE

Scale: **AS NOTED**
Project No. : **1700011**
Date : **JULY 21, 2020**

Sheet Number :

C8.0

Jul 20, 2020 - 12:21pm teresad
Z:\1700001-1700999\1700011 (Kirkland Fire Sta 24)\CAD\Design\CD\C8.0NFS-24 PP.dwg

Provided to Builders Exchange of WA, Inc. For usage Conditions Agreement see www.bxwa.com - Always Verify Scal

SEE SHEET C7.0 FOR CONTINUATION

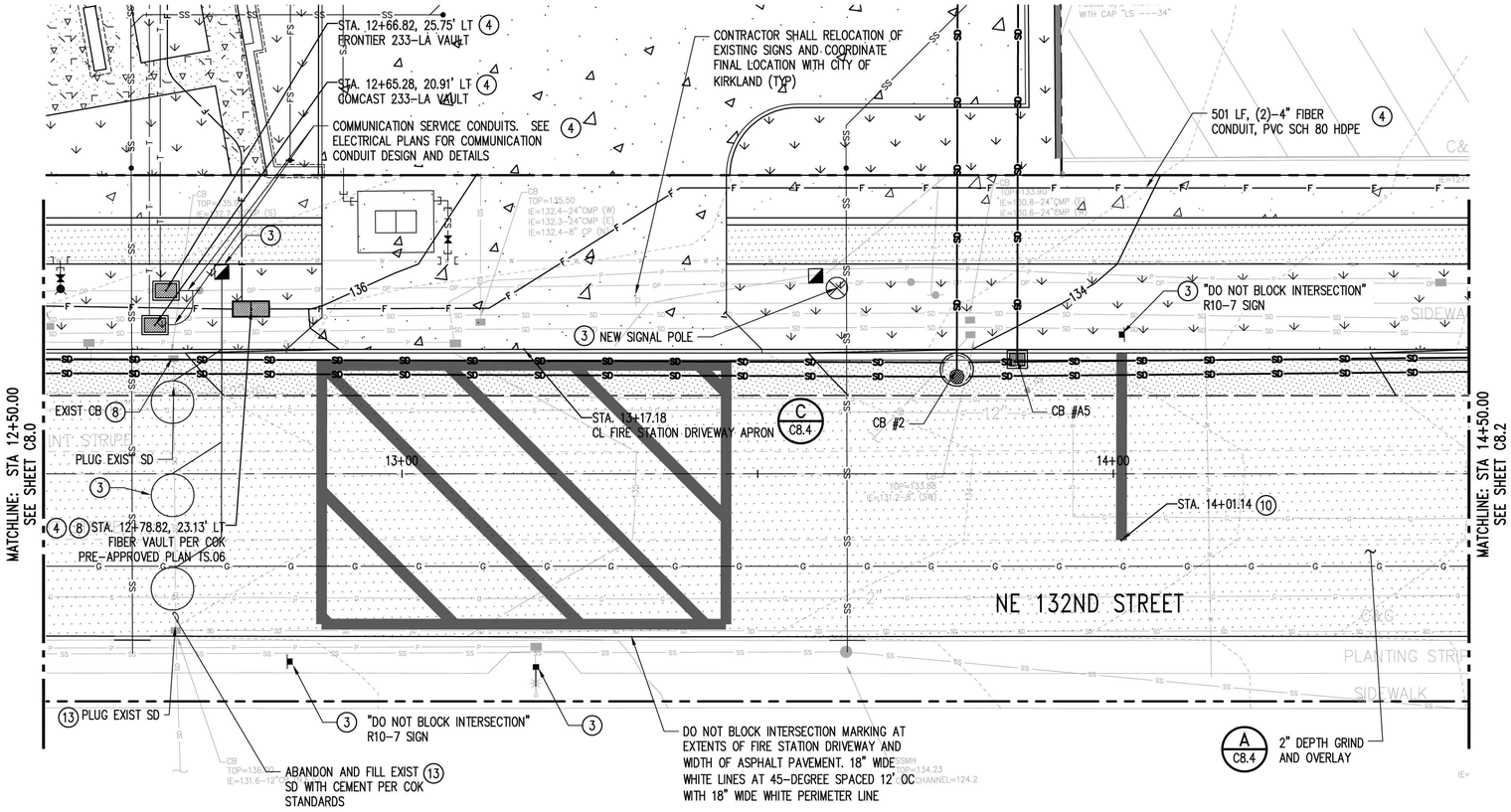

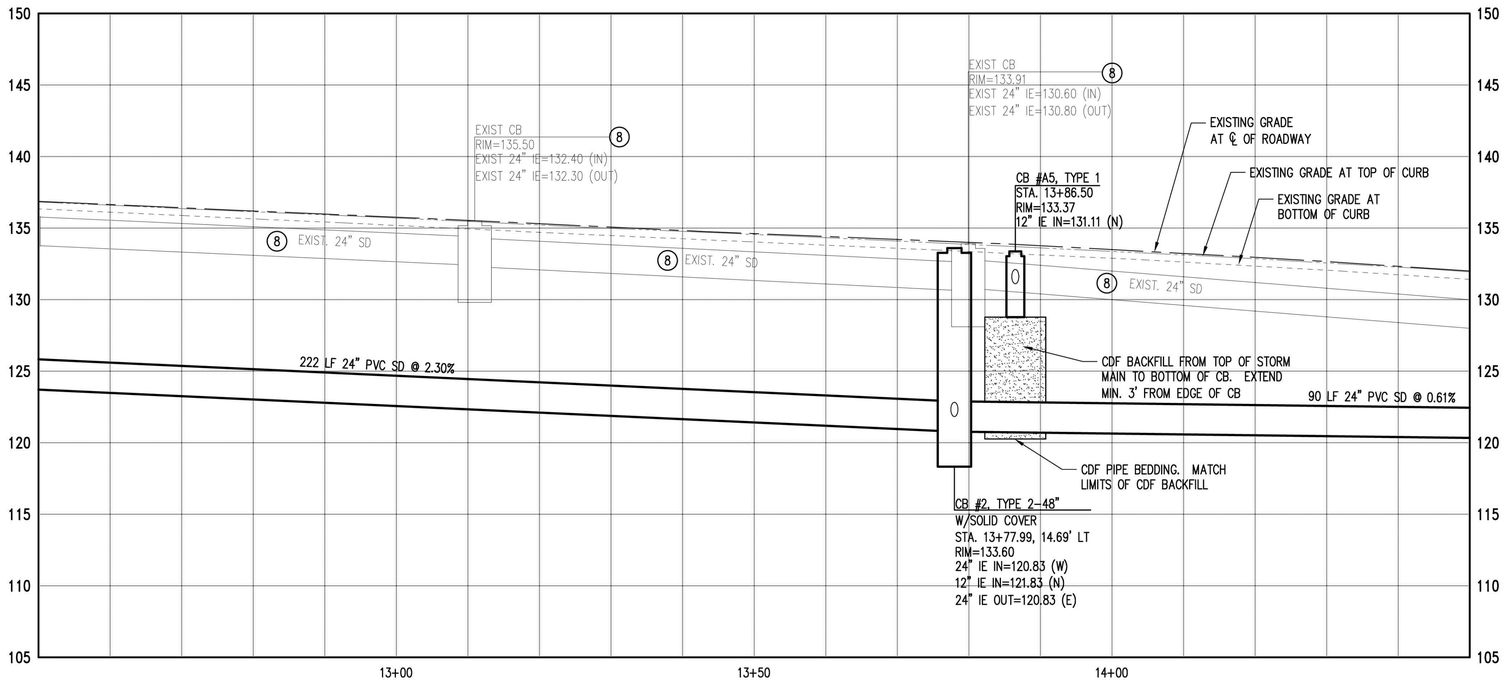

CONSTRUCTION NOTES:

1. CONTRACTOR SHALL LOCATE ALL EXISTING UTILITIES PRIOR TO CONSTRUCTION.
2. EXISTING BELOW AND ABOVE GRADE UTILITIES SHALL REMAIN UNLESS OTHERWISE NOTED. ANY UTILITIES DAMAGED THAT ARE INTENDED TO REMAIN SHALL BE RESTORED AT THE CONTRACTOR'S EXPENSE.

(3) SEE SIGNAL PLANS FOR SIGNAL INFRASTRUCTURE DETAILS, CONDUITS, AND SIGNAGE. COORDINATE FINAL LOCATIONS IN THE FIELD WITH CITY OF KIRKLAND AND TRAFFIC ENGINEER.

(4) CONTRACTOR SHALL INSTALL VAULTS AND CONDUITS FOR FIBER AND TELECOMMUNICATION UTILITIES. UTILITY PURVEYOR SHALL PERFORM INSTALLATION OF SERVICE FEEDS AT OWNER'S EXPENSE. CONTRACTOR SHALL COORDINATE WITH UTILITY PURVEYOR FOR PULLING SERVICE FEEDS AFTER CONDUIT INSTALLATION.

(5) UTILITY VAULT COVERS LOCATED WITHIN PAVEMENT AREAS SHALL BE TRAFFIC RATED.

6. EXISTING UTILITY STRUCTURE LIDS AND COVERS SHALL BE ADJUSTED TO MATCH FINISHED GRADES.

(7) CONTRACTOR SHALL RESTORE EXISTING RIGHT OF WAY IMPROVEMENTS DAMAGED DURING CONSTRUCTION OF PROPOSED UTILITIES IN THE RIGHT OF WAY BEYOND LIMITS OF PROJECT FRONTAGE.

(8) REMOVE EXISTING CATCH BASIN. PLUG AND ABANDON EXISTING STORM MAIN AND FILL WITH CEMENT PER COK STANDARDS. CONTRACTOR SHALL COORDINATE REMOVAL OF EXISTING STORM MAIN FOR INSTALLATION OF PROPOSED SIGNAL AND UTILITY INFRASTRUCTURE.

(9) REMOVE EXISTING STOP BAR AND TURN ARROW PAVEMENT MARKINGS.

(10) STOP BAR AND CROSS WALK PER COK STANDARD PLAN CK-R.28.

(11) LEFT TURN ARROW PER COK STANDARD PLAN CK-R.30. COORDINATE FINAL LOCATIONS IN THE FIELD WITH CITY OF KIRKLAND AND TRAFFIC ENGINEER.

12. STORM DRAIN PIPES IN PUBLIC RIGHT OF WAY SHALL BE DUCTILE IRON CL50 OR SOLID WALL PVC SDR35. KOR-N-SEAL BOOT WITH CORRUGATED PIPE ADAPTER OR APPROVED EQUAL SHALL BE REQUIRED FOR NEW PIPE CONNECTIONS TO DRAINAGE STRUCTURES.

(13) PIPE ABANDONMENT SHALL BE LOCATED OUTSIDE OF STRUCTURE TO ELIMINATE PIPE PROTRUSION.

N

0 5 10 20
1 inch = 10 ft. HORZ
0 2.5 5 10
1 inch = 5 ft. VERT

811 Call 811 two business days before you dig

TCA
ARCHITECTURE + PLANNING + DESIGN
6211 ROOSEVELT WAY NORTHEAST
SEATTLE, WA 98115
tel: (206) 522-3830
fax: (206) 522-2456

kpff
1601 5th Avenue, Suite 1600
Seattle, WA 98101
206.622.5822
www.kpff.com

JAMES S. PEERS
STATE OF WASHINGTON
19847
REGISTERED
PROFESSIONAL ENGINEER
7/20/2020

BID SET

No.	Description	Date:

Project Title:

FIRE STATION 24
City of Kirkland
Kirkland, Washington

Sheet Title:

NE 132ND STREET PLAN & PROFILE

Scale: AS NOTED
Project No. : 1700011
Date : JULY 21, 2020

Sheet Number :

C8.1

Jul 20, 2020 - 12:44pm CharlieC Z:\1700001-1700999\1700011 (Kirkland Fire Sta 24)\CAD\Design\C0\C8.0KTS-24 PP.dwg

Provided to Builders Exchange of WA, Inc. For usage Conditions Agreement see www.bxwa.com - Always Verify Scal

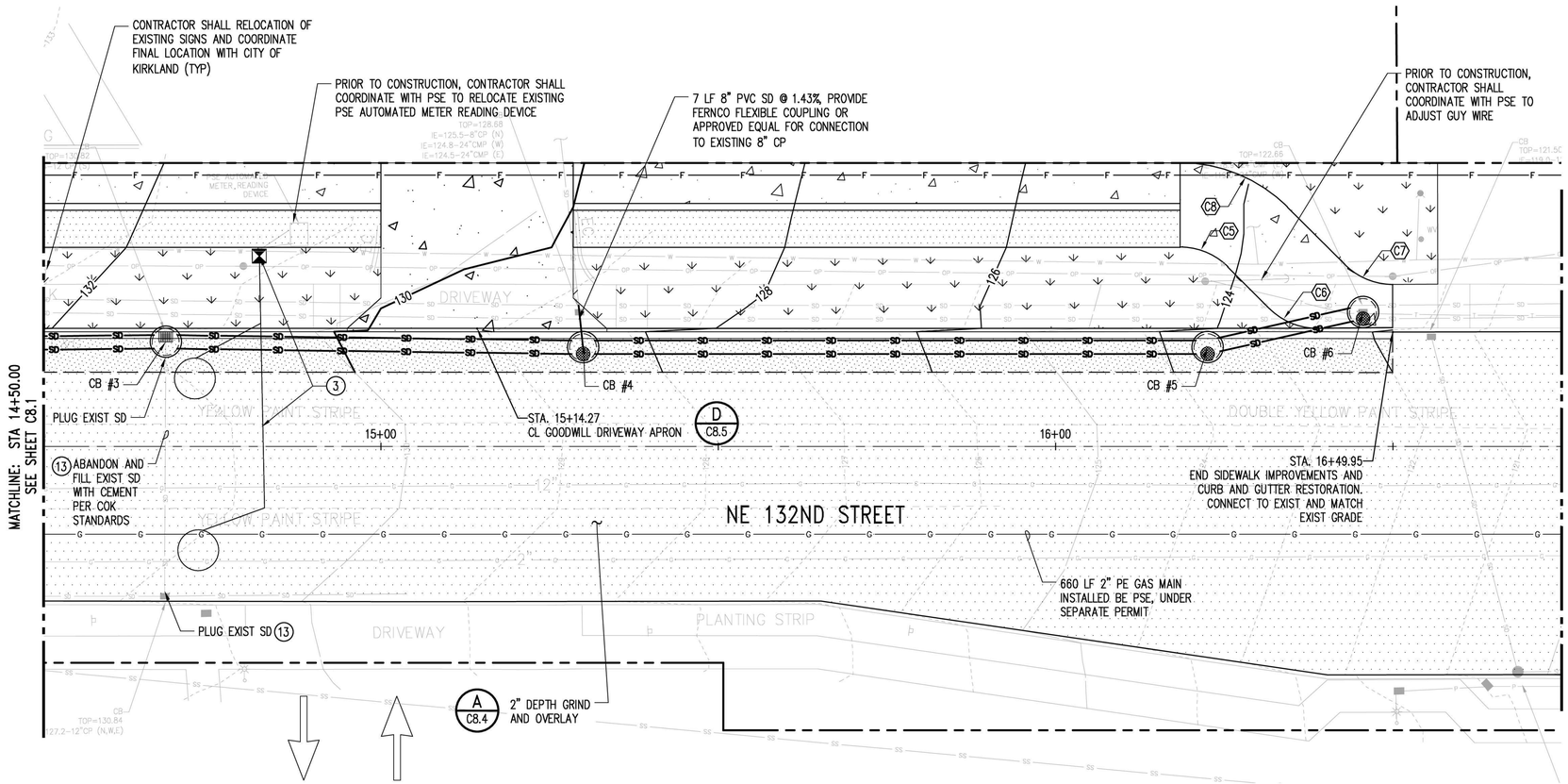

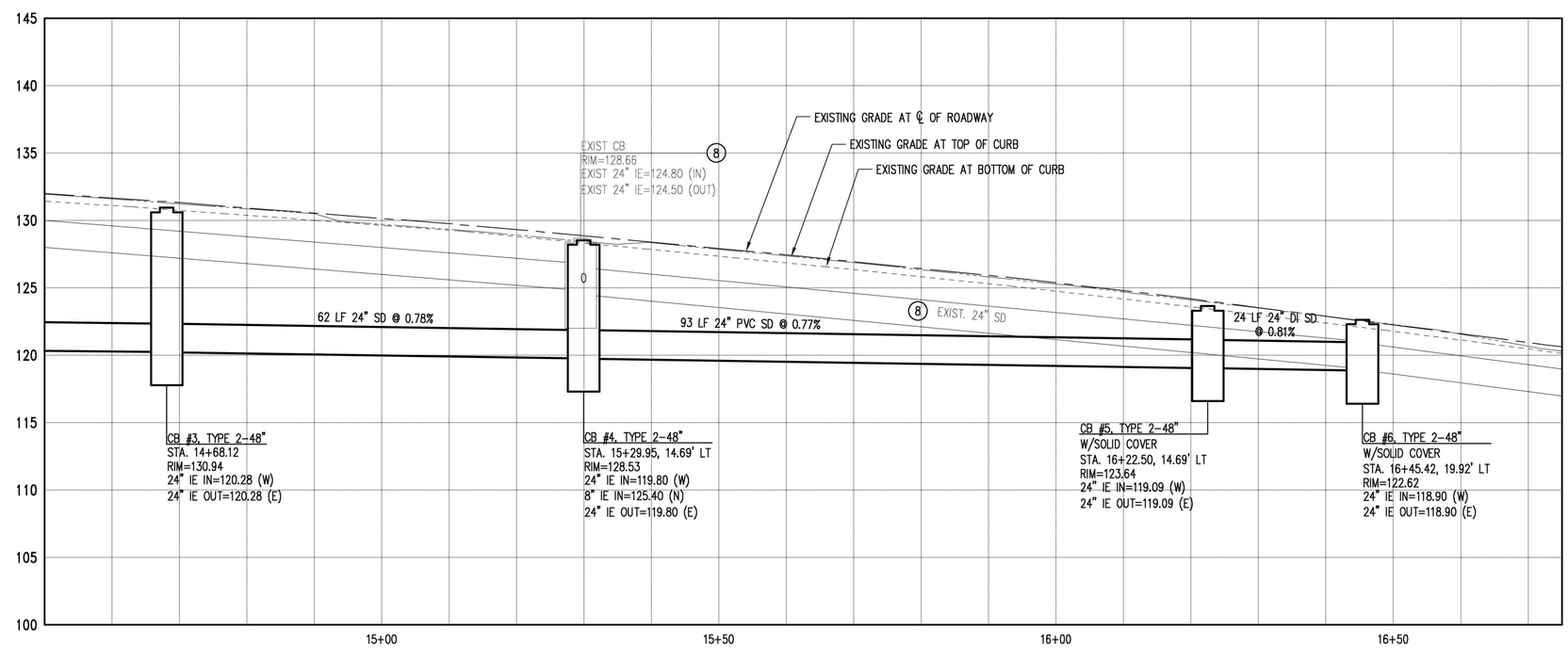

CONSTRUCTION NOTES:

1. CONTRACTOR SHALL LOCATE ALL EXISTING UTILITIES PRIOR TO CONSTRUCTION.
2. EXISTING BELOW AND ABOVE GRADE UTILITIES SHALL REMAIN UNLESS OTHERWISE NOTED. ANY UTILITIES DAMAGED THAT ARE INTENDED TO REMAIN SHALL BE RESTORED AT THE CONTRACTOR'S EXPENSE.
3. SEE SIGNAL PLANS FOR SIGNAL INFRASTRUCTURE DETAILS, CONDUITS, AND SIGNAGE. COORDINATE FINAL LOCATIONS IN THE FIELD WITH CITY OF KIRKLAND AND TRAFFIC ENGINEER.
4. CONTRACTOR SHALL INSTALL VAULTS AND CONDUITS FOR FIBER AND TELECOMMUNICATION UTILITIES. UTILITY PURVEYOR SHALL PERFORM INSTALLATION OF SERVICE FEEDS AT OWNER'S EXPENSE. CONTRACTOR SHALL COORDINATE WITH UTILITY PURVEYOR FOR PULLING SERVICE FEEDS AFTER CONDUIT INSTALLATION.
5. UTILITY VAULT COVERS LOCATED WITHIN PAVEMENT AREAS SHALL BE TRAFFIC RATED.
6. EXISTING UTILITY STRUCTURE LIDS AND COVERS SHALL BE ADJUSTED TO MATCH FINISHED GRADES.
7. CONTRACTOR SHALL RESTORE EXISTING RIGHT OF WAY IMPROVEMENTS DAMAGED DURING CONSTRUCTION OF PROPOSED UTILITIES IN THE RIGHT OF WAY BEYOND LIMITS OF PROJECT FRONTAGE.
8. REMOVE EXISTING CATCH BASIN. PLUG AND ABANDON EXISTING STORM MAIN AND FILL WITH CEMENT PER COK STANDARDS. CONTRACTOR SHALL COORDINATE REMOVAL OF EXISTING STORM MAIN FOR INSTALLATION OF PROPOSED SIGNAL AND UTILITY INFRASTRUCTURE.
9. REMOVE EXISTING STOP BAR AND TURN ARROW PAVEMENT MARKINGS.
10. STOP BAR AND CROSS WALK PER COK STANDARD PLAN CK-R.28.
11. LEFT TURN ARROW PER COK STANDARD PLAN CK-R.30. COORDINATE FINAL LOCATIONS IN THE FIELD WITH CITY OF KIRKLAND AND TRAFFIC ENGINEER.
12. STORM DRAIN PIPES IN PUBLIC RIGHT OF WAY SHALL BE DUCTILE IRON CL50 OR SOLID WALL PVC SDR35. KOR-N-SEAL BOOT WITH CORRUGATED PIPE ADAPTER OR APPROVED EQUAL SHALL BE REQUIRED FOR NEW PIPE CONNECTIONS TO DRAINAGE STRUCTURES.
13. PIPE ABANDONMENT SHALL BE LOCATED OUTSIDE OF STRUCTURE TO ELIMINATE PIPE PROTRUSION.

CURVE DATA TABLE - ⑬			
RADIUS	ANGLE		LENGTH
10.0'	44°53'05"		7.83'
PC 16+18.45, 29.50' LT		EL	124.43'
1/2 POINT		EL	124.27'
PT 16+25.51, 26.58' LT		EL	124.11'

CURVE DATA TABLE - ⑧			
RADIUS	ANGLE		LENGTH
10.0'	45°00'53"		7.86'
PC 16+31.69, 20.42' LT		EL	123.52'
1/2 POINT		EL	123.31'
PT 16+37.47, 17.50' LT		EL	123.10'

CURVE DATA TABLE - ⑦			
RADIUS	ANGLE		LENGTH
10.0'	44°59'41"		7.85'
PC 16+49.95, 24.00' LT		EL	122.52' EG
1/2 POINT		EL	122.74'
PT 16+41.74, 27.31' LT		EL	122.95'

CURVE DATA TABLE - ⑧			
RADIUS	ANGLE		LENGTH
22.5'	44°52'28"		17.63'
PC 16+34.33, 35.44' LT		EL	123.62'
1/2 POINT		EL	124.11'
PT 16+18.45, 42.00' LT		EL	124.60' EG

N

0 5 10 20
1 inch = 10 ft. HORZ
0 2.5 5 10
1 inch = 5 ft. VERT

811 Call 811 two business days before you dig

TCA
ARCHITECTURE + PLANNING + DESIGN
6211 ROOSEVELT WAY NORTHEAST
SEATTLE, WA 98115
tel: (206) 522-3830
fax: (206) 522-2456

kpff
1601 5th Avenue, Suite 1600
Seattle, WA 98101
206.622.5822
www.kpff.com

CEMENT S. PETRIS — STATE OF WASHINGTON — 39847 — REGISTERED PROFESSIONAL ENGINEER

7/20/2020

BID SET

No.	Description	Date:

Project Title:

FIRE STATION 24

City of Kirkland
Kirkland, Washington

Sheet Title:

NE 132ND STREET PLAN & PROFILE

Scale: AS NOTED
Project No.: 1700011
Date: JULY 21, 2020

Sheet Number:

C8.2

Jul 20, 2020 - 12:21pm teresad Z:\1700001-1700899\1700011 (Kirkland Fire Sta 24)\CAD\Design\C2\C8.0WKS-24 PP.dwg

Provided to Builders Exchange of WA, Inc. For usage Conditions Agreement see www.bxwa.com - Always Verify Scal

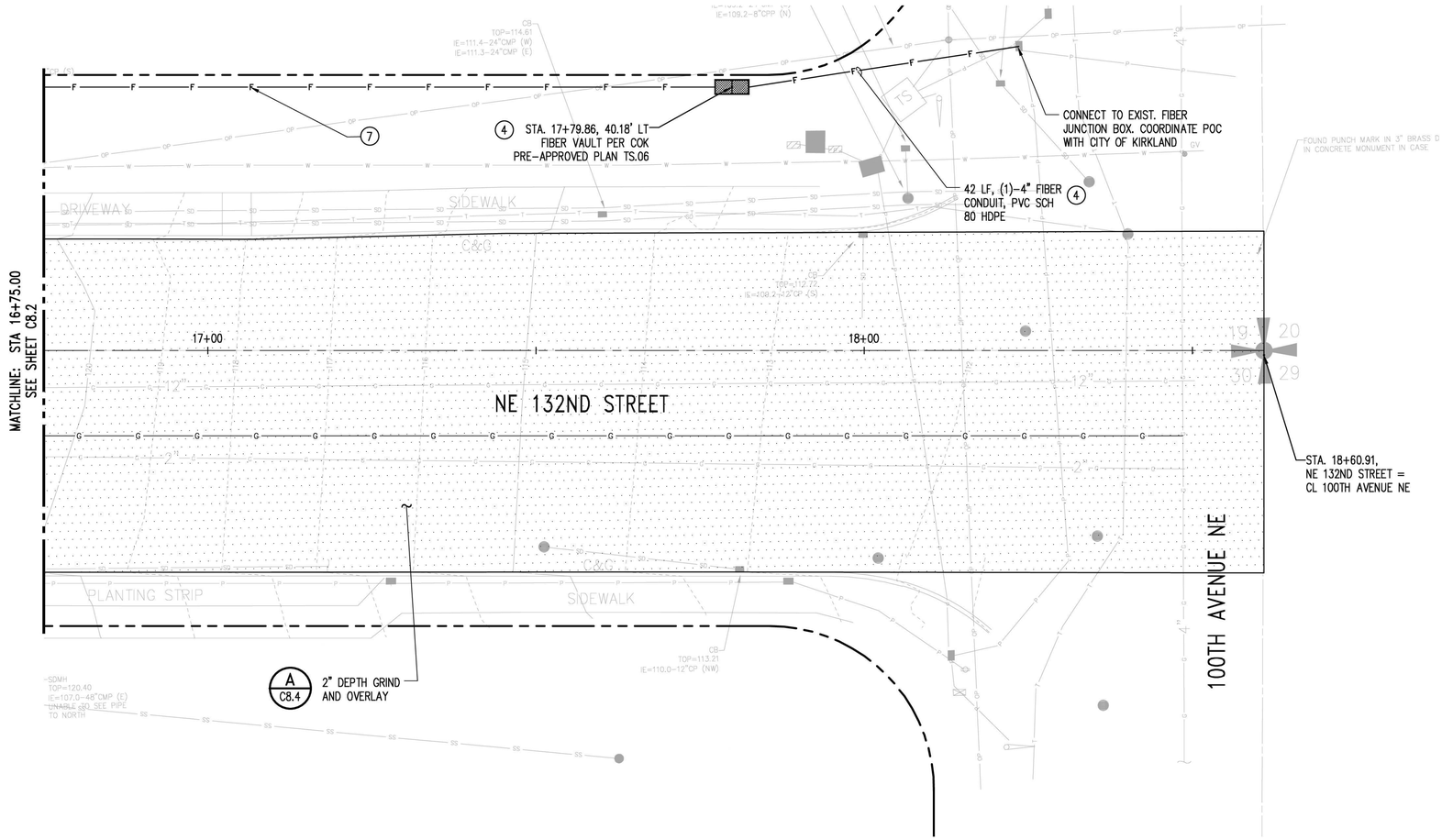

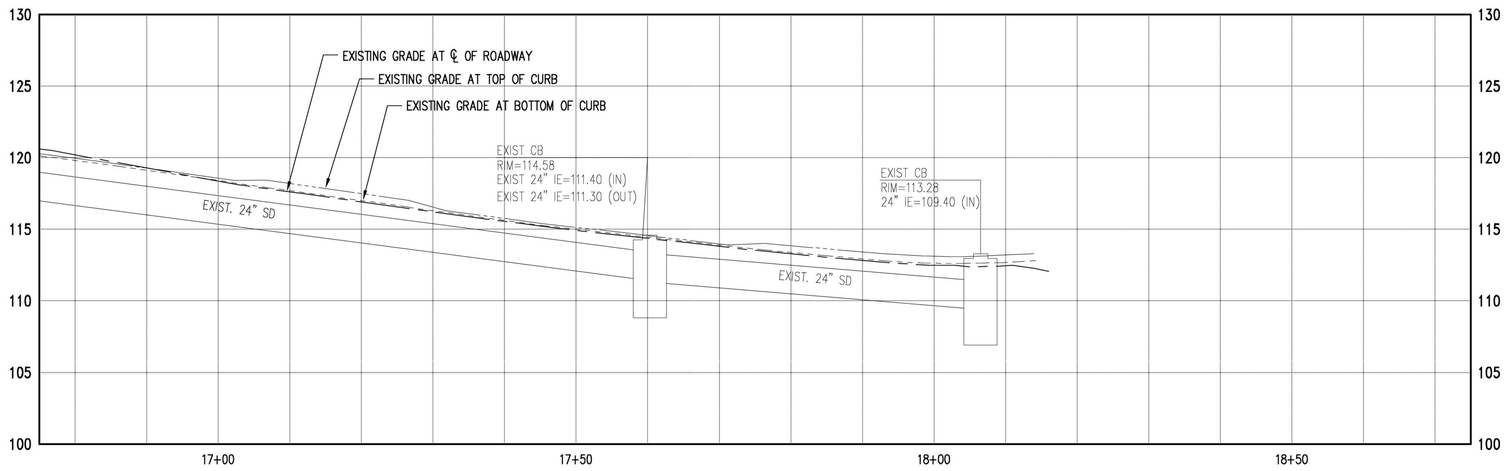

CONSTRUCTION NOTES:

1. CONTRACTOR SHALL LOCATE ALL EXISTING UTILITIES PRIOR TO CONSTRUCTION.
2. EXISTING BELOW AND ABOVE GRADE UTILITIES SHALL REMAIN UNLESS OTHERWISE NOTED. ANY UTILITIES DAMAGED THAT ARE INTENDED TO REMAIN SHALL BE RESTORED AT THE CONTRACTOR'S EXPENSE.
3. SEE SIGNAL PLANS FOR SIGNAL INFRASTRUCTURE DETAILS, CONDUITS, AND SIGNAGE. COORDINATE FINAL LOCATIONS IN THE FIELD WITH CITY OF KIRKLAND AND TRAFFIC ENGINEER.
4. CONTRACTOR SHALL INSTALL VAULTS AND CONDUITS FOR FIBER AND TELECOMMUNICATION UTILITIES. UTILITY PURVEYOR SHALL PERFORM INSTALLATION OF SERVICE FEEDS AT OWNER'S EXPENSE. CONTRACTOR SHALL COORDINATE WITH UTILITY PURVEYOR FOR PULLING SERVICE FEEDS AFTER CONDUIT INSTALLATION.
5. UTILITY VAULT COVERS LOCATED WITHIN PAVEMENT AREAS SHALL BE TRAFFIC RATED.
6. EXISTING UTILITY STRUCTURE LIDS AND COVERS SHALL BE ADJUSTED TO MATCH FINISHED GRADES.
7. CONTRACTOR SHALL RESTORE EXISTING RIGHT OF WAY IMPROVEMENTS DAMAGED DURING CONSTRUCTION OF PROPOSED UTILITIES IN THE RIGHT OF WAY BEYOND LIMITS OF PROJECT FRONTAGE.
8. REMOVE EXISTING CATCH BASIN. PLUG AND ABANDON EXISTING STORM MAIN AND FILL WITH CEMENT PER COK STANDARDS. CONTRACTOR SHALL COORDINATE REMOVAL OF EXISTING STORM MAIN FOR INSTALLATION OF PROPOSED SIGNAL AND UTILITY INFRASTRUCTURE.
9. REMOVE EXISTING STOP BAR AND TURN ARROW PAVEMENT MARKINGS.
10. STOP BAR AND CROSS WALK PER COK STANDARD PLAN CK-R.28.
11. LEFT TURN ARROW PER COK STANDARD PLAN CK-R.30. COORDINATE FINAL LOCATIONS IN THE FIELD WITH CITY OF KIRKLAND AND TRAFFIC ENGINEER.
12. STORM DRAIN PIPES IN PUBLIC RIGHT OF WAY SHALL BE DUCTILE IRON CL50 OR SOLID WALL PVC SDR35. KOR-N-SEAL BOOT WITH CORRUGATED PIPE ADAPTER OR APPROVED EQUAL SHALL BE REQUIRED FOR NEW PIPE CONNECTIONS TO DRAINAGE STRUCTURES.
13. PIPE ABANDONMENT SHALL BE LOCATED OUTSIDE OF STRUCTURE TO ELIMINATE PIPE PROTRUSION.

N

0 5 10 20
1 inch = 10 ft. HORZ
0 2.5 5 10
1 inch = 5 ft. VERT

811 Call 811 two business days before you dig

TCA
ARCHITECTURE + PLANNING + DESIGN
6211 ROOSEVELT WAY
NORTHEAST
SEATTLE, WA 98115
tel: (206) 522-3830
fax: (206) 522-2456

kpff
1601 5th Avenue, Suite 1600
Seattle, WA 98101
206.622.5822
www.kpff.com

LICENSED PROFESSIONAL ENGINEER
STATE OF WASHINGTON
39847
REGISTERED
PROFESSIONAL ENGINEER
7/20/2020

BID SET

No.	Description	Date:

Project Title:

FIRE STATION 24
City of Kirkland
Kirkland, Washington

Sheet Title:

NE 132ND STREET
PLAN & PROFILE

Scale: **AS NOTED**
Project No. : **1700011**
Date : **JULY 21, 2020**

Sheet Number :

C8.3

Jul 20, 2020 - 12:21pm teresad Z:\1700001-1700999\1700011 (Kirkland Fire Sta 24)\CAD\Design\C01\C8.DWG-24 PP.dwg

Provided to Builders Exchange of WA, Inc. For usage Conditions Agreement see www.bxwa.com - Always Verify Scal

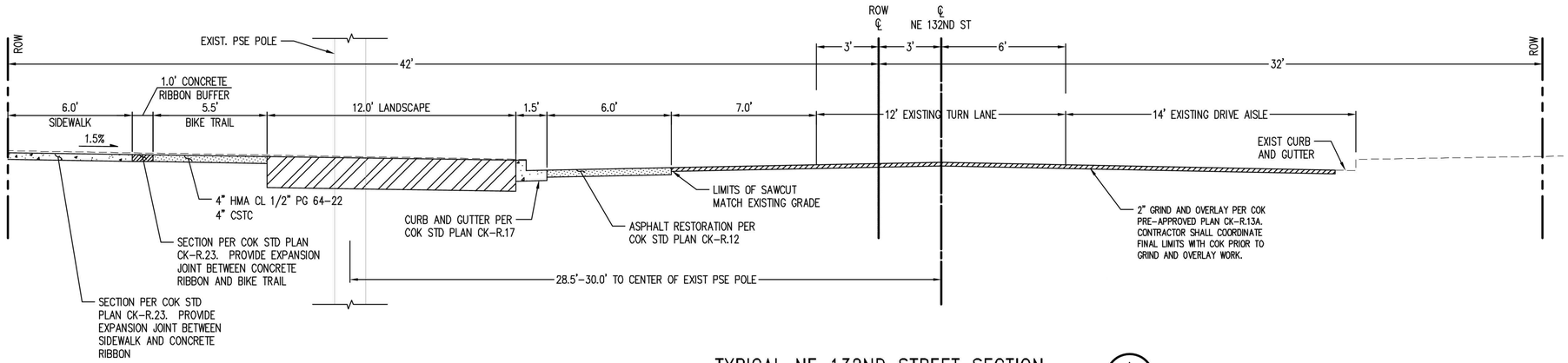

TYPICAL NE 132ND STREET SECTION

SCALE: 1" = 3'

A
C8.0-C8.3

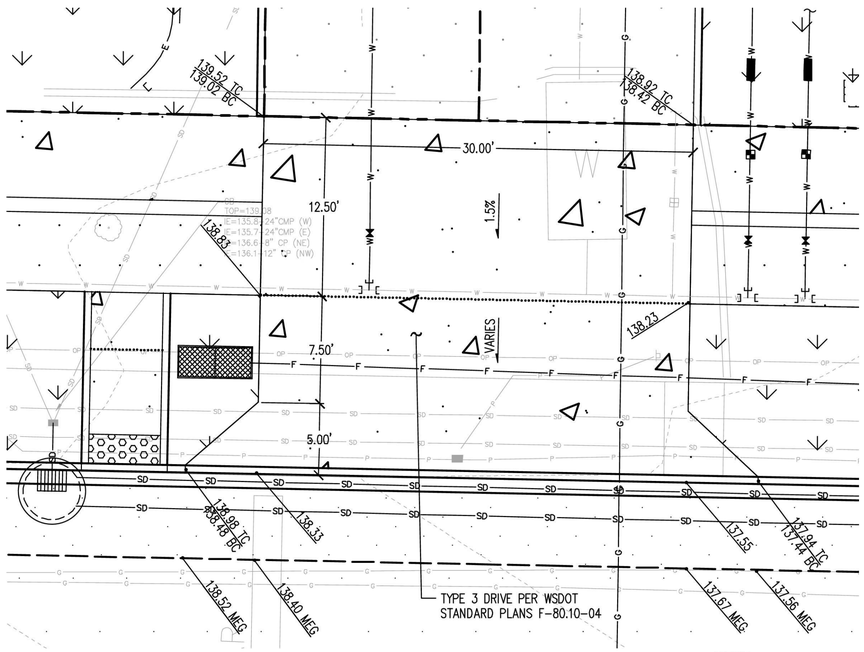

ACCESS ROAD DRIVEWAY APRON

1" = 5'

B
C8.0

NORTH

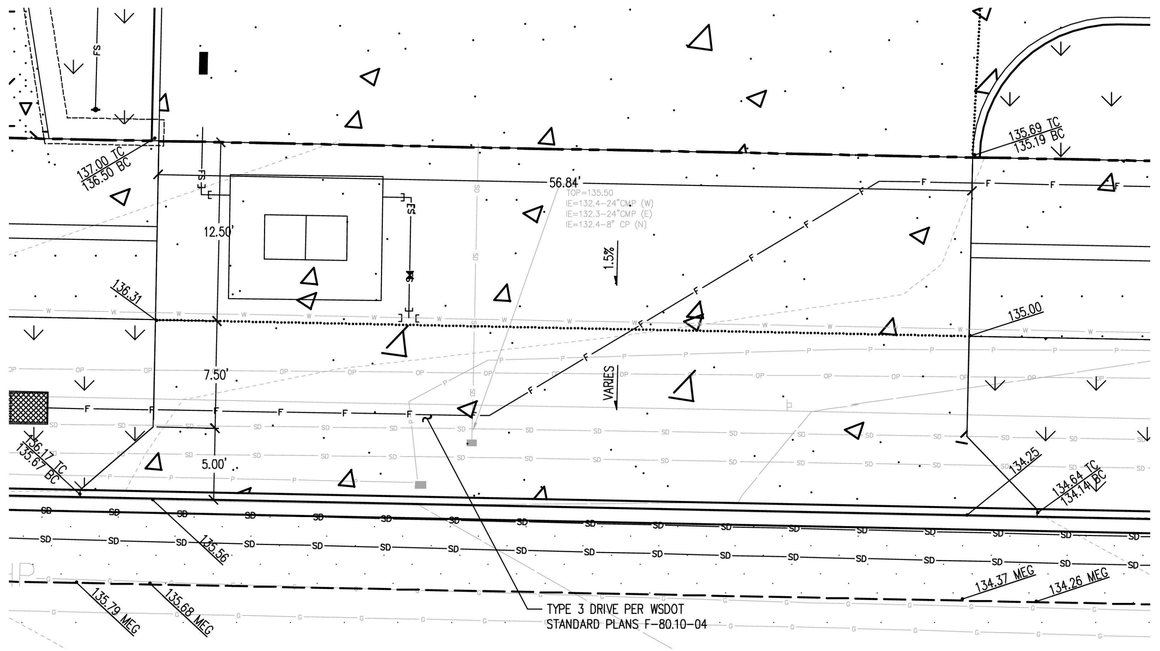

FIRE STATION DRIVEWAY APRON

1" = 5'

C
C8.1

NORTH

811 Call 811 two business days before you dig

TCA
ARCHITECTURE + PLANNING + DESIGN
6211 ROOSEVELT WAY
NORTHEAST
SEATTLE, WA 98115
tel: (206) 522-3830
fax: (206) 522-2456

kpff
1601 5th Avenue, Suite 1600
Seattle, WA 98101
206.622.5822
www.kpff.com

REGISTERED PROFESSIONAL ENGINEER
STATE OF WASHINGTON
39847
TIMOTHY S. PETERS

7/20/2020

BID SET

No.	Description	Date:

Project Title:

FIRE STATION 24

City of Kirkland
Kirkland, Washington

Sheet Title:

NE 132ND STREET SECTION AND DETAILS

Scale: **AS NOTED**

Project No. : **1700011**

Date : **JULY 21, 2020**

Sheet Number :

C8.4

Jul 20, 2020 - 12:21pm tarasad

Z:\1700001-1700999\1700011 (Kirkland Fire Sta 24)\CAD\Design\C0\C8.4KS-24 XSECT.dwg

Provided to Builders Exchange of WA, Inc. For usage Conditions Agreement see www.bxwa.com - Always Verify Scal

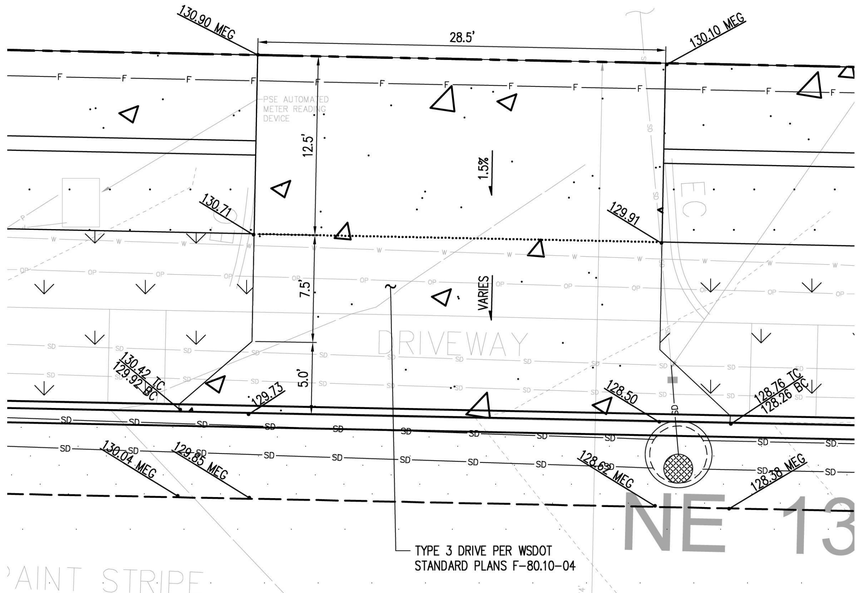

GOODWILL DRIVEWAY APRON
1" = 5'
D C8.2
NORTH

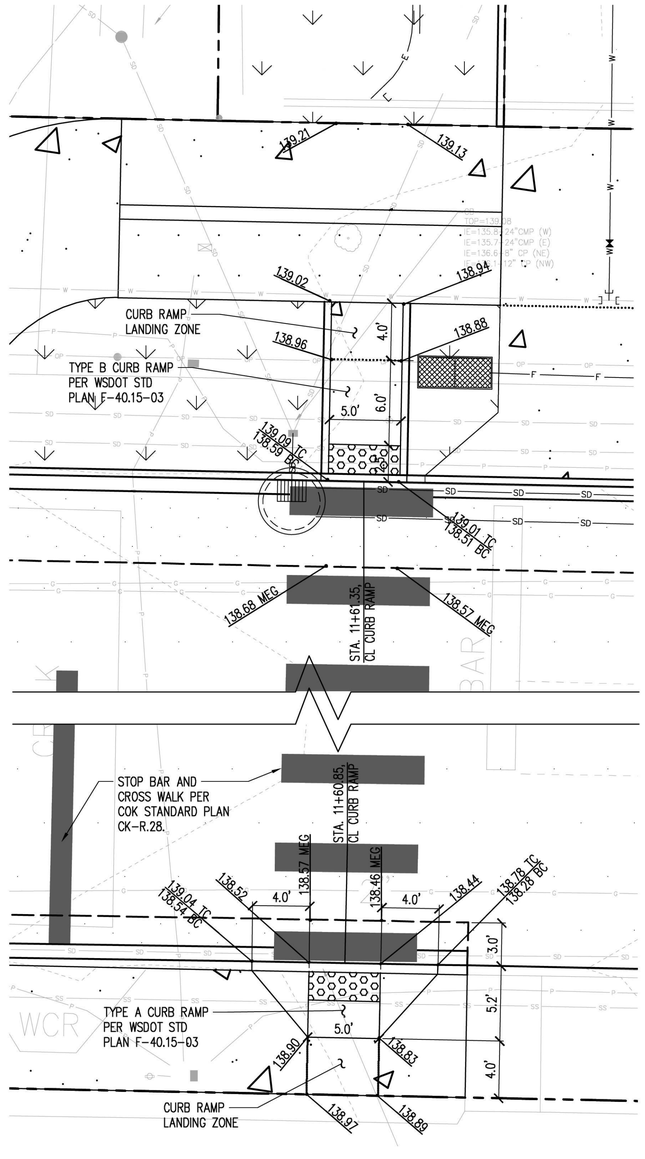

CURB RAMP DETAIL
1" = 5'
E C8.0
NORTH

CURB RAMP NOTES:

1. HORIZONTAL CONTROL STATION FOR CURB RAMPS ARE TO THE CENTER OF RAMP.
2. PRIOR TO CONSTRUCTION, CONTRACTOR SHALL VERIFY CURB RAMP AND CROSSWALK LOCATION AND CONTACT ENGINEER IF CONFLICT EXISTS WITH PROPOSED WORK.
3. PRIOR TO CONSTRUCTION, CONTRACTOR SHALL STAKE EXTENTS OF RAMP AND CLEAR LANDING ZONE AS SHOWN ON PLANS AND PROVIDE FINISH GRADE SPOT ELEVATIONS AT LOCATIONS SPECIFIED ON THIS PAGE TO ENGINEER FOR VERIFICATION OF ADA COMPLIANCE.
4. CROSS SLOPES SHALL NOT EXCEED 2.0%, LONGITUDINAL SLOPES SHALL NOT EXCEED 1:12 SLOPE.
5. LANDING ZONE SHALL NOT EXCEED 2.0% IN ANY DIRECTION.
6. TRUNCATED DOMES PER COK STANDARD PLAN CK-R.25B

811 Call 811 two business days before you dig

TCA
ARCHITECTURE + PLANNING + DESIGN
6211 ROOSEVELT WAY NORTHEAST
SEATTLE, WA 98115
tel: (206) 522-3830
fax: (206) 522-2456

kpff
1601 5th Avenue, Suite 1600
Seattle, WA 98101
206.622.5822
www.kpff.com

JEREMY S. PETERS
STATE OF WASHINGTON
39847
REGISTERED
PROFESSIONAL ENGINEER
7/20/2020

BID SET

No.	Description	Date:

Project Title:

FIRE STATION 24
City of Kirkland
Kirkland, Washington

Sheet Title:

NE 132ND STREET SECTION AND DETAILS

Scale: **AS NOTED**
Project No. **1700011**
Date : **JULY 21, 2020**

Sheet Number :

C8.5

Jul 20, 2020 - 12:21pm teresad
Z:\1700001-1700999\1700011 Kirkland Fire Sta 24\CAD\Design\C2D\C8.MKS-24 XSECT.dwg

Provided to Builders Exchange of WA, Inc. For usage Conditions Agreement see www.bxwa.com - Always Verify Scal

DETENTION VAULT STRUCTURAL NOTES

DESIGN LOADS

ALL DESIGN AND CONSTRUCTION SHALL CONFORM TO THE REQUIREMENTS OF THE INTERNATIONAL BUILDING CODE (IBC), 2015 EDITION, AS AMENDED BY THE CITY OF KIRKLAND.

LIVE LOADS
IN ADDITION TO THE DEAD LOADS, THE FOLLOWING FLOOR LIVE LOADS WERE USED FOR DESIGN. DESIGN IS PER THE GREATEST EFFECT FROM THE FOLLOWING LOADS CONSIDERED NON-CONCURRENTLY.

AASHTO HS25
SIDEWALKS, DRIVEWAYS 250 PSF
FIRETRUCK OUTRIGGER LOAD 45 K ON AN 18" SQUARE (UNREDUCIBLE)

SOIL LOADS

ALLOWABLE SOIL-BEARING PRESSURE	2000 PSF DL + LL
MAX SOIL FILL DENSITY	120 PCF
RETAINING WALLS	40 PCF (EQUIVALENT FLUID PRESSURE) UNRESTRAINED
	65 PCF (EQUIVALENT FLUID PRESSURE) RESTRAINED, UNSATURATED CONDITION
	95 PCF (EQUIVALENT FLUID PRESSURE) RESTRAINED, SATURATED CONDITION

SEASONAL HIGH GROUND WATER TABLE ELEVATION IS ASSUMED TO BE 126.5'.
EQUIVALENT FLUID PRESSURES FOR RESTRAINED CONDITION INCLUDE SEISMIC LOAD.

GENERAL NOTES

SUBMITTALS
SHOP DRAWINGS SHALL BE SUBMITTED TO THE ENGINEER PRIOR TO ANY FABRICATION OR CONSTRUCTION FOR ALL STRUCTURAL ITEMS, INCLUDING THE FOLLOWING: CONCRETE REINFORCEMENT AND PRECAST CONCRETE ITEMS.

DEFERRED SUBMITTALS
PER IBC SECTION 107.3.4.1, DRAWINGS AND CALCULATIONS FOR THE DESIGN AND FABRICATION OF ITEMS THAT ARE DESIGNED BY OTHERS SHALL BEAR THE SEAL AND SIGNATURE OF THE WASHINGTON STATE REGISTERED PROFESSIONAL ENGINEER WHO IS RESPONSIBLE FOR THE DESIGN AND SHALL BE SUBMITTED TO THE ARCHITECT AND THE BUILDING DEPARTMENT FOR REVIEW PRIOR TO FABRICATION. DEFERRED SUBMITTALS INCLUDE BUT ARE NOT LIMITED TO THE FOLLOWING:

PRECAST CONCRETE

SPECIAL CONDITIONS
CONTRACTOR SHALL VERIFY ALL LEVELS, DIMENSIONS, AND EXISTING CONDITIONS IN THE FIELD BEFORE PROCEEDING. CONTRACTOR SHALL NOTIFY THE ARCHITECT OF ANY DISCREPANCIES OR FIELD CHANGES PRIOR TO INSTALLATION OR FABRICATION. IN CASE OF DISCREPANCIES BETWEEN THE EXISTING CONDITIONS AND THE DRAWINGS, THE CONTRACTOR SHALL OBTAIN DIRECTION FROM THE ENGINEER BEFORE PROCEEDING. DIMENSIONS NOTED AS PLUS OR MINUS (±) INDICATE UNVERIFIED DIMENSIONS AND ARE APPROXIMATE. NOTIFY ENGINEER IMMEDIATELY OF CONFLICTS OR EXCESSIVE VARIATIONS FROM INDICATED DIMENSIONS. NOTED DIMENSIONS TAKE PRECEDENCE OVER SCALED DIMENSIONS--DO NOT SCALE DRAWINGS. DIMENSIONS OF EXISTING CONDITIONS MAY BE BASED ON RECORD DRAWINGS AND ARE TO BE FIELD-VERIFIED BY THE CONTRACTOR.

CONTRACTOR SHALL VERIFY ALL EXISTING CONDITIONS BEFORE COMMENCING ANY DEMOLITION. CONTRACTOR SHALL PROVIDE ADEQUATE SHORING AND BRACING OF ALL STRUCTURAL MEMBERS, EXISTING CONSTRUCTION AND SOIL EXCAVATIONS, AS REQUIRED, AND IN A MANNER SUITABLE TO THE WORK SEQUENCE. TEMPORARY SHORING AND BRACING SHALL NOT BE REMOVED UNTIL ALL FINAL CONNECTIONS HAVE BEEN COMPLETED IN ACCORDANCE WITH THE DRAWINGS AND MATERIALS HAVE ACHIEVED DESIGN STRENGTH. NO REINFORCING BARS IN EXISTING CONSTRUCTION SHALL BE CUT UNLESS DIRECTED TO BY THE ENGINEER OR AS SHOWN ON THE DRAWINGS.

CONTRACTOR SHALL BE RESPONSIBLE FOR ALL SAFETY PRECAUTIONS AND THE METHODS, TECHNIQUES, SEQUENCES OR PROCEDURES REQUIRED TO PERFORM THE WORK.

SOILS
SEE THE GEOTECHNICAL REPORT BY HWA GEOSCIENCES, INC., DATED DECEMBER 16, 2019 AND SUPPLEMENTAL INFORMATION IN THE MEMO DATED JUNE 8, 2020, FOR MORE COMPLETE INFORMATION. EARTHWORK MATERIAL, BACKFILL AND COMPACTION SHALL BE IN ACCORDANCE WITH THE RECOMMENDATIONS OF THE GEOTECHNICAL REPORT. BACKFILL BEHIND WALLS SHALL NOT BE PLACED BEFORE THE WALLS ACHIEVE 28 DAY CONCRETE STRENGTH OR THE WALLS ARE TEMPORARILY BRACED. ALL TOPSOIL ORGANICS AND LOOSE SURFACE SOIL SHALL BE REMOVED FROM BENEATH FILL SUPPORTING CONCRETE SLABS OR PAVING.

CONCRETE

CONCRETE WORK SHALL CONFORM TO ALL REQUIREMENTS OF IBC CHAPTER 19.

CONCRETE MIXTURES
CONCRETE MIXTURES SHALL CONFORM TO THE FOLLOWING REQUIREMENTS:

CONCRETE MIXTURES

f'c (PSI)	TEST AGE (DAYS)	EXPOSURE CLASS				USE
		F	S	W	C	
4,500	28	F2	S0	W1	C1	FOUNDATIONS, CONCRETE WALLS

CONCRETE MIXTURES SHALL CONFORM TO THE MOST STRINGENT REQUIREMENTS FOR EXPOSURE CLASSES SPECIFIED IN THE TABLE ABOVE AND ACI 318 TABLE 19.3.2.1.

WATER-REDUCING ADMIXTURES MAY BE INCORPORATED IN CONCRETE MIX DESIGNS, BUT SHALL CONFORM TO ASTM C 494, AND BE USED IN STRICT ACCORDANCE WITH THE MANUFACTURER'S RECOMMENDATIONS. CaCl2 OR OTHER WATER-SOLUBLE CHLORIDE ADMIXTURES SHALL NOT BE USED.

WATER/CEMENTITIOUS MATERIALS RATIO SHALL BE MEASURED BY WEIGHT AND SHALL BE BASED ON THE TOTAL CEMENTITIOUS MATERIAL. WATER/CEMENTITIOUS MATERIALS RATIO AND WATER CONTENT SHALL BE DETERMINED BY THE SUPPLIER BASED ON STRENGTH REQUIREMENTS AND SHALL NOT EXCEED THE MAXIMUM WATER/CEMENTITIOUS MATERIAL RATIO IN ACI 318 TABLE 19.3.2.1 FOR THE EXPOSURE CLASSES LISTED.

FIELD-MEASURED SLUMP SHALL CONFORM TO THE SUBMITTED CONCRETE MIX DESIGN. TOLERANCE OF SLUMP SHALL CONFORM TO ASTM C 94.

ALL CONCRETE SUBJECT TO EXPOSURE CLASSES F1, F2 OR F3 SHALL BE AIR ENTRAINED. AIR-ENTRAINING AGENTS SHALL CONFORM TO ASTM C 260. THE AMOUNT OF ENTRAINED AIR SHALL BE ACCORDING TO ACI 318 TABLE 19.3.3.1 WITH A FIELD TOLERANCE OF ±1.5 PERCENT BY VOLUME. THE AMOUNT OF ENTRAINED AIR SHALL BE MEASURED IN THE FIELD AT THE DISCHARGE FROM THE TRUCK.

THE CONTRACTOR SHALL SUBMIT CONCRETE MIX DESIGNS FOR APPROVAL 2 WEEKS PRIOR TO PLACING ANY CONCRETE. THE MIX DESIGN SHALL BE IN CONFORMANCE WITH ACI 318, CHAPTER 19. THE SUBMITTAL SHALL INDICATE WHERE EACH CONCRETE MIX IS TO BE USED ON THE PROJECT, AS WELL AS THE MAXIMUM AGGREGATE SIZE OF EACH MIX. MAXIMUM AGGREGATE SIZE SHALL CONFORM TO THE PROJECT SPECIFICATIONS.

CURING
IF THE AIR TEMPERATURE WILL EXCEED 75 DEGREES F WITHIN 48 HOURS OF PLACING CONCRETE, A MOIST CURE SHALL BE APPLIED TO THE CONCRETE FOR A PERIOD OF 36 HOURS AFTER FINISHING CONCRETE SURFACES. REFER TO THE PROJECT SPECIFICATIONS FOR CURING REQUIREMENTS.

REINFORCING STEEL
DEFORMED BARS ASTM A 615, GRADE 60

REINFORCING SHALL BE SUPPORTED AS SPECIFIED BY THE CRSI MANUAL OF STANDARD PRACTICE. REINFORCING STEEL SHALL BE DETAILED IN ACCORDANCE WITH ACI STANDARD OF PRACTICE AS OUTLINED IN ACI 315, "DETAILS AND DETAILING OF CONCRETE REINFORCEMENT."

LAP ALL REINFORCING BARS AS NOTED ON THE DRAWINGS. WHERE SPLICE LENGTH IS NOT SHOWN, USE TYPE Lb (Lbt FOR TOP BARS) SPLICE PER DEVELOPMENT AND SPLICE LENGTH SCHEDULE.

USE		COVER
WALL BARS		2"
FOUNDATIONS		
	TOP BARS	2" MIN
	SIDE BARS	2"
	BOTTOM BARS	3" (CAST AGAINST EARTH)

STRUCTURAL ABBREVIATIONS

	SEATTLE DEPARTMENT OF CONSTRUCTION AND INSPECTIONS
AB	ANCHOR BOLT
ADD'L	ADDITIONAL
ADH	ADHESIVE
ADJ	ADJUSTABLE
AGG	AGGREGATE
ANCH	ANCHOR
ARCH	ARCHITECTURAL
B/	BOTTOM OF
BLDG	BUILDING
BOT	BOTTOM
BRG	BEARING
BSMT	BASEMENT
BTWN	BETWEEN
CAP	CAPACITY
CC	CENTER TO CENTER
CDF	CONTROLLED DENSITY FILL
CIP	CAST-IN-PLACE
CJ	CONSTRUCTION OR CONTROL JOINT
CJP	COMPLETE JOINT PENETRATION
CL	CENTERLINE
CLR	CLEAR
CONC	CONCRETE
CONN	CONNECTION
CONST	CONSTRUCTION
CONT	CONTINUOUS
CONTR	CONTRACTOR
CONTY	CONTINUITY
COORD	COORDINATE
CTR	CENTER
CY	CUBIC YARD
DBL	DOUBLE
DET	DETAIL
DIA	DIAMETER
DIAG	DIAGONAL
DN	DOWN
DWG	DRAWING
DWL	DOWEL
EA	EACH
EF	EACH FACE
EL	ELEVATION
EQ	EQUAL
ES	EACH SIDE
EW	EACH WAY
EX	EXISTING
EXP	EXPANSION
EXT	EXTERIOR
F	FAHRENHEIT
FD	FLOOR DRAIN
FDN	FOUNDATION
FIN	FINISH
FLG	FLANGE
FLR	FLOOR
FS	FAR SIDE
FT	FEET
FTG	FOOTING
GA	GAUGE
GEN	GENERAL
GR	GRADE
GWB	GYPSUM WALL BOARD
HC	HOLLOWCORE
HK	HOOK
HORIZ	HORIZONTAL
HP	HIGH POINT
IBC	INTERNATIONAL BUILDING CODE
ID	INSIDE DIAMETER
IE	INVERT ELEVATION
IF	INSIDE FACE
IN	INCH
INFO	INFORMATION
INT	INTERIOR
K	KIP (1,000 LBS.)
KSF	KIPS PER SQUARE FOOT
LFH	LONG FACE HORIZONTAL
LLH	LONG LEG HORIZONTAL
LLV	LONG LEG VERTICAL
LNGT	LONGITUDINAL
LP	LOW POINT
MAX	MAXIMUM
MFR	MANUFACTURER
MIN	MINIMUM
MISC	MISCELLANEOUS
MOM	MOMENT
NIC	NOT IN CONTRACT
NS	NEAR SIDE
NS	NONSHRINK
NTS	NOT TO SCALE
OC	ON CENTER
OD	OUTSIDE DIAMETER
OF	OUTSIDE FACE
OPNG	OPENING
OPP	OPPOSITE
PC	PIECE
PEN	PENETRATION
PJP	PARTIAL JOINT PENETRATION
PL	PROPERTY LINE
PL	PLATE
PLWD	PLYWOOD
PNL	PANEL
PSF	POUNDS PER SQUARE FOOT
PSI	POUNDS PER SQUARE INCH
R	RADIUS
REINF	REINFORCING
REQ'D	REQUIRED
RND	ROUND
RTN	RETURN
SC	SLIP CRITICAL
SCHED	SCHEDULE
SECT	SECTION
SHT	SHEET
SIM	SIMILAR
SOG	SLAB-ON-GRADE
SP	SPACE
SPEC	SPECIFICATION
SQ	SQUARE
STD	STANDARD
STIFF	STIFFENER
STIRR	STIRRUP
STL	STEEL
STRUCT	STRUCTURAL
SUPP	SUPPORT
SYM	SYMMETRICAL
T&B	TOP AND BOTTOM
T/	TOP OF
TB	TABLE
THK	THICK(NESS)
THRU	THROUGH
TRANS	TRANSVERSE
TYP	TYPICAL
UNO	UNLESS NOTED OTHERWISE
VERT	VERTICAL
VIF	VERIFY IN FIELD
W/	WITH
W/O	WITHOUT
WL	WATER LINE
WP	WORK POINT

DRAWING LIST

VS0.1	DETENTION VAULT STRUCTURAL NOTES AND DRAWING LIST
VS0.2	STATEMENT OF SPECIAL INSPECTIONS
VS1.0	DETENTION VAULT FOUNDATION AND FRAMING PLANS
VS4.0	DETENTION VAULT DETAILS
VS4.1	DETENTION VAULT DETAILS

STRUCTURAL DRAWING SYMBOLS

CONCRETE SYMBOLS

- CONCRETE WALL BELOW
- CONCRETE WALL ABOVE OR PASSING THRU LEVEL
- PARTIAL HEIGHT CONCRETE WALL

GENERAL SYMBOLS

- SURFACE - SLOPE UP
- SURFACE - SLOPE DOWN
- SURFACE - SLOPE TWO WAYS
- UNDISTURBED SOIL, COMPACTED SOIL, BACKFILL, OR ANY PREPARED SUBGRADE. SEE SPECIFICATIONS FOR TYPE OF MATERIAL AND PREPARATION METHOD.
- NORTH ARROW
- STANDARD SECTION CUTS
- 1 / S3.1 — ELEVATION OF WALL OR FRAME
- 123.75' — BOTTOM OF CONCRETE ELEVATION
- 125.25' — TOP OF CONCRETE ELEVATION
- T/SLAB — REFERENCE ELEVATION. REFER TO PLAN UNLESS NOTED OTHERWISE.
- DIRECTION OF DOWNWARD SLOPE

TCA
ARCHITECTURE + PLANNING + DESIGN
6211 ROOSEVELT WAY NORTHEAST
SEATTLE, WA 98115
tel: (206) 522-3830
fax: (206) 522-2456

kpff
1601 Fifth Avenue, Suite 1600
Seattle, WA 98101
206.622.5822
kpff.com

THOMAS RICHARD HUDSON — STATE OF WASHINGTON — 39013 — REGISTERED PROFESSIONAL ENGINEER — 7/21/20

BID SET

No.	Description	Date:

Fire Station 24
City of Kirkland
Kirkland, Washington

Sheet Title:
DETENTION VAULT STRUCTURAL NOTES AND DRAWING LIST

Scale: As indicated
Project No. : 2000267
Date : July 21, 2020

Sheet Number :
VS0.1

PRINTED: 7/16/2020 11:29:32 AM FILE: C:\Revit Models\2018\12000267 - Fire Station 24 Detention Vault_Struc_randy.fukuda@kpff.com.rvt

Provided to Builders Exchange of WA, Inc. For usage Conditions Agreement see www.bxwa.com - Always Verify Scal

STATEMENT OF STRUCTURAL SPECIAL INSPECTIONS AND TESTING

TABLE 1 - REQUIRED GEOTECHNICAL SPECIAL INSPECTIONS

SYSTEM OR MATERIAL	INSPECTION				REMARKS
	IBC CODE REFERENCE	CODE OR STANDARD REFERENCE	FREQUENCY (NOTE 6)		
			CONTINUOUS	PERIODIC	
SOILS					
VERIFY MATERIALS BELOW SHALLOW FOUNDATIONS ARE ADEQUATE TO ACHIEVE THE DESIGN BEARING CAPACITY.	TB 1705.6 1705.6	GEOTECHNICAL REPORT	-	X	BY THE GEOTECHNICAL ENGINEER
VERIFY EXCAVATIONS ARE EXTENDED TO PROPER DEPTH AND HAVE REACHED PROPER MATERIAL.			-	X	
PERFORM CLASSIFICATION AND TESTING OF COMPACTED FILL MATERIALS.			-	X	
VERIFY USE OF PROPER MATERIALS, DENSITIES AND LIFT THICKNESSES DURING PLACEMENT AND COMPACTION OF COMPACTED FILL.			X	-	
PRIOR TO PLACEMENT OF COMPACTED FILL, INSPECT SUBGRADE AND VERIFY THAT SITE HAS BEEN PREPARED PROPERLY.			-	X	

TABLE 2 - REQUIRED STRUCTURAL SPECIAL INSPECTIONS

SYSTEM OR MATERIAL	INSPECTION				REMARKS
	IBC CODE REFERENCE	CODE OR STANDARD REFERENCE	FREQUENCY (NOTE 6)		
			CONTINUOUS	PERIODIC	
CONCRETE					
INSPECT REINFORCEMENT AND VERIFY PLACEMENT.	TB 1705.3(1) 1705.3 1908.4	ACI 318: 20, 25.2-25.3, 26.6.1-26.6.3, 26.8, 26.13.3; AISC 360: N5.7	-	X	TOLERANCE AND REINFORCING PLACEMENT PER ACI 318: 26.6
VERIFY USE OF REQUIRED DESIGN MIX.	TB 1705.3(5) 1705.3 1904 1908.2 1908.3	ACI 318: 19, 26.4.3-26.4.4, 26.13.3	-	X	-
PRIOR TO CONCRETE PLACEMENT, FABRICATE SPECIMENS FOR STRENGTH TESTS, PERFORM SLUMP AND AIR CONTENT TESTS, AND DETERMINE THE TEMPERATURE OF THE CONCRETE.	TB 1705.3(6) 1908.10	ASTM C 172 ASTM C 31 ACI 318: 26.4, 26.12	X	-	-
INSPECT CONCRETE AND SHOTCRETE PLACEMENT FOR PROPER APPLICATION TECHNIQUES.	TB 1705.3(7) 1705.3 1908.6-8	ACI 318: 26.5, 26.13.3	X	-	-
VERIFY CURING METHOD AND DURATION OF CURING FOR EACH MEMBER.	-	ACI 318: 26.13.3.3(b)	-	X	-
VERIFY MAINTENANCE OF SPECIFIED CURING TEMPERATURE AND TECHNIQUES.	TB 1705.3(8) 1705.3 1908.9	ACI 318: 26.5.3-26.5.5, 26.13.3	-	X	-
INSPECT ERECTION OF PRECAST CONCRETE MEMBERS.	TB 1705.3(10) 1705.3	ACI 318: 26.9, 26.13.3	-	X	ALL CONNECTIONS VISUALLY INSPECTED
INSPECT FORMWORK FOR SHAPE, LOCATION AND DIMENSIONS OF THE CONCRETE MEMBER BEING FORMED.	TB 1705.3(12) 1705.3	ACI 318: 26.11.1.2(b)	-	X	-
VERIFY USE OF REQUIRED DESIGN MIX.	TB 1705.3(5) 1705.3 1904 1908.2 1908.3	ACI 318: 19, 26.4.3-26.4.4, 26.13.3	-	X	-

STATEMENT OF SPECIAL INSPECTION AND TESTING NOTES:

1. SPECIAL INSPECTIONS SHALL CONFORM TO CHAPTER 17 OF THE INTERNATIONAL BUILDING CODE (IBC) AND THE REFERENCE CODES AND STANDARDS LISTED IN NOTE 2. REFER TO TABLES 1 AND 2 FOR SPECIAL INSPECTION REQUIREMENTS.

2. REFERENCE CODES AND STANDARDS ARE AS FOLLOWS:

   IBC 2015
   ACI 318-14
   AWC SDPWS 2015
   AWS CURRENT EDITION
   ASTM CURRENT EDITION
   AISC 360-10
   341-10
   RCSC 2009
   TMS 402-13, 602-13
   SDI QA/QC-2011

3. SPECIAL INSPECTIONS AND ASSOCIATED TESTING SHALL BE PERFORMED BY AN APPROVED QUALIFIED TESTING AND INSPECTING AGENCY MEETING THE REQUIREMENTS OF ASTM E 329 (MATERIALS), ASTM D 3740 (SOILS), ASTM C 1077 (CONCRETE), AND ASTM E 543 (NON-DESTRUCTIVE). THE TESTING AND INSPECTING AGENCY SHALL FURNISH TO THE ARCHITECT A COPY OF THEIR SCOPE OF ACCREDITATION. SPECIAL INSPECTORS SHALL BE CERTIFIED BY THE BUILDING OFFICIAL. WELDING INSPECTORS SHALL BE QUALIFIED PER SECTION 6.1.4.1.1 OF AWS D1.1. AND WABO.

4. THE SPECIAL INSPECTOR SHALL OBSERVE THE INDICATED WORK FOR COMPLIANCE WITH THE APPROVED CONSTRUCTION DOCUMENTS. ALL DISCREPANCIES SHALL BE BROUGHT TO THE ATTENTION OF THE CONTRACTOR FOR CORRECTION AND NOTED IN THE INSPECTION REPORTS. ISSUES REQUIRING IMMEDIATE CORRECTIVE ACTIONS OR ENGINEERING INPUT ARE TO BE BROUGHT TO THE ENGINEER'S ATTENTION IMMEDIATELY UPON DISCOVERY.

5. THE SPECIAL INSPECTOR SHALL FURNISH INSPECTION REPORTS FOR EACH INSPECTION TO THE BUILDING OFFICIAL, ARCHITECT, CONTRACTOR, AND OWNER. THE TESTING AND INSPECTING AGENCY SHALL SUBMIT A FINAL REPORT STATING THAT THE WORK REQUIRING SPECIAL INSPECTION WAS INSPECTED AND IS IN CONFORMANCE WITH THE APPROVED CONSTRUCTION DOCUMENTS AND THAT ALL DISCREPANCIES NOTED IN THE INSPECTION REPORTS HAVE BEEN CORRECTED.

6. CONTINUOUS SPECIAL INSPECTION: SPECIAL INSPECTION BY THE SPECIAL INSPECTOR WHO IS PRESENT WHEN AND WHERE THE WORK TO BE INSPECTED IS BEING PERFORMED. PERIODIC SPECIAL INSPECTION: SPECIAL INSPECTION BY THE SPECIAL INSPECTOR WHO IS INTERMITTENTLY PRESENT WHERE THE WORK TO BE INSPECTED HAS BEEN OR IS BEING PERFORMED.

7. OBSERVE: OBSERVE THESE ITEMS ON A RANDOM BASIS. OPERATIONS NEED NOT BE DELAYED PENDING THESE INSPECTIONS.
   PERFORM: PERFORM THESE TASKS FOR EACH ELEMENT.

8. INDICATED CONCRETE TESTING MEETS MINIMUM REQUIREMENTS FOR STRUCTURAL TESTING TO BE PROVIDED BY THE APPROVED QUALIFIED TESTING AND INSPECTING AGENCY. ADDITIONAL TESTING FOR CONSTRUCTION CONSIDERATIONS ARE NOT INDICATED AND SHALL BE DETERMINED BY THE CONTRACTOR AND PROVIDED AT CONTRACTOR'S EXPENSE.

TCA
ARCHITECTURE + PLANNING + DESIGN
6211 ROOSEVELT WAY NORTHEAST
SEATTLE, WA 98115
tel: (206) 522-3830
fax: (206) 522-2456

kpff
1601 Fifth Avenue, Suite 1600
Seattle, WA 98101
206.622.5822
kpff.com

THOMAS RICHARD HUDSON — STATE OF WASHINGTON — 39013 — REGISTERED PROFESSIONAL ENGINEER — 7/21/20

BID SET

No.	Description	Date:

Fire Station 24
City of Kirkland
Kirkland, Washington

Sheet Title:
STATEMENT OF SPECIAL INSPECTIONS

Scale:
Project No. : 2000267
Date : July 21, 2020

Sheet Number :
VS0.2

PRINTED: 7/16/2020 11:29:32 AM FILE: C:\Revit Models\2018\2000267 - Fire Station 24 Detention Vault_Struc_randy.fukuda@kpff.com.rvt

Provided to Builders Exchange of WA, Inc. For usage Conditions Agreement see www.bxwa.com - Always Verify Scal

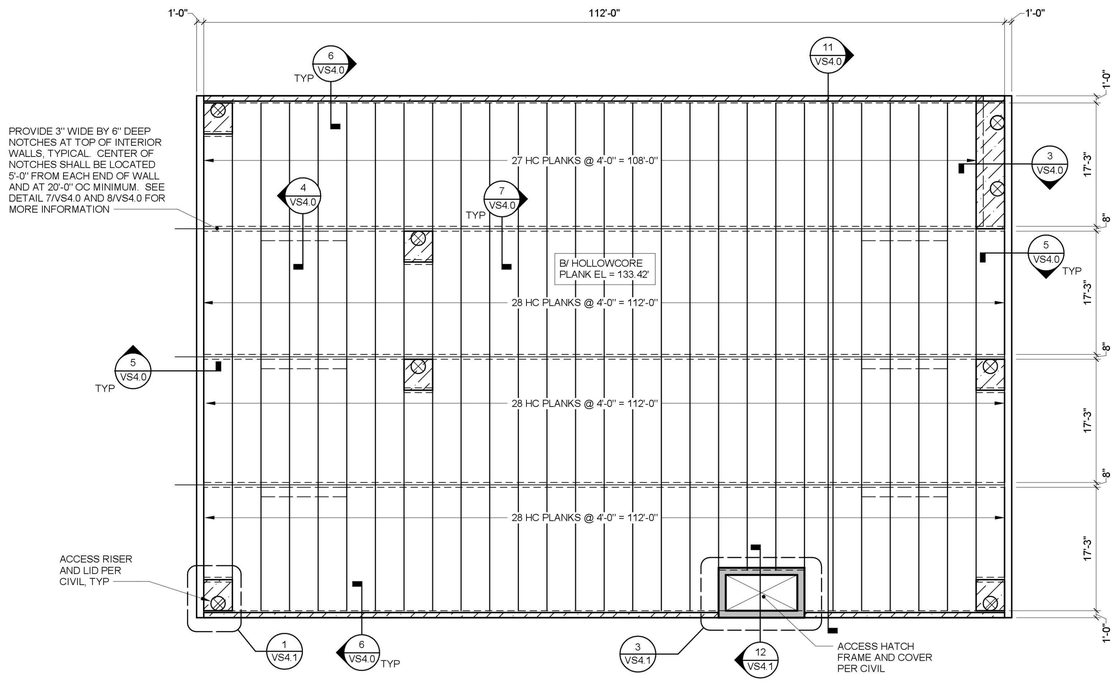

1 DETENTION VAULT LID FRAMING PLAN

1" = 10'-0"

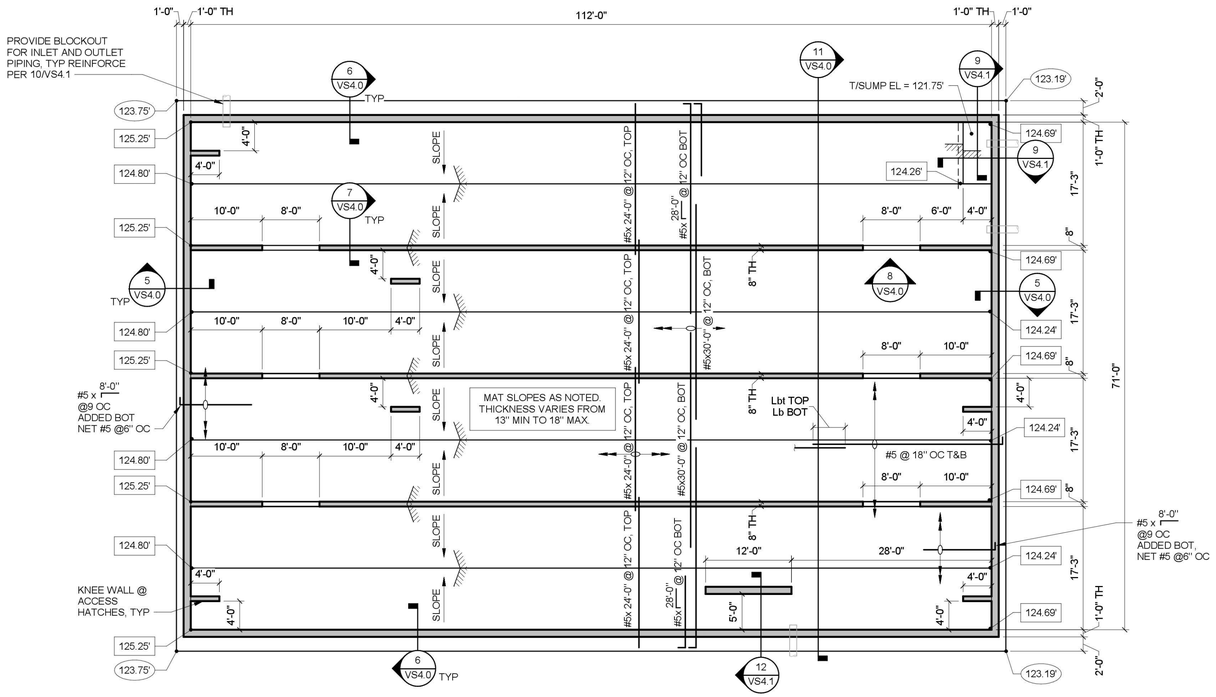

2 DETENTION VAULT FOUNDATION PLAN

1" = 10'-0"

GENERAL PLAN NOTES:

G1. REFERENCE DRAWINGS:
VS0.X - STRUCTURAL NOTES, SPECIAL INSPECTION SCHEDULE, SYMBOLS AND ABBREVIATIONS
VS4.X - TYPICAL CONCRETE DETAILS

DETENTION VAULT NOTES:

1. MINIMUM HOLLOWCORE PLANK THICKNESS = 12". BOTTOM OF PLANK ELEVATION = 133'-5".
2. ELEVATIONS REFERENCE VERTICAL DATUM NAVD 88. COORDINATE WITH CIVIL DRAWINGS.
3. SEE CIVIL DRAWINGS FOR VAULT LOCATION.
4. DO NOT BACKFILL BEHIND VAULT WALLS UNTIL CONCRETE OF FOUNDATION AND WALLS HAS REACHED 28 DAY DESIGN STRENGTH.
5. BACKFILL SHALL BE BROUGHT UP UNIFORMLY AROUND THE ENTIRE PERIMETER OF THE VAULT IN 2' MAX HEIGHT LIFTS.
6. HEAVY EQUIPMENT SHALL NOT BE PLACED OR DRIVEN OVER THE VAULT ROOF STRUCTURE UNTIL THE ELEVATION OF BACKFILL HAS REACHED THAT OF THE ROOF STRUCTURE. PRECAST PLANK MANUFACTURER SHALL REVIEW AND APPROVE OF ANY SUCH EQUIPMENT ON TOP OF VAULT STRUCTURE.
7. PRECAST HOLLOWCORE PLANK SHALL BE DESIGNED BY THE MANUFACTURER FOR THE MINIMUM AND MAXIMUM SOIL DEPTHS ACROSS THE ENTIRE VAULT IN ADDITION TO THE LOADS GIVEN IN THE GENERAL STRUCTURAL NOTES. SEE CIVIL DRAWINGS FOR FINAL GRADING.
8. LIMIT DEPTH OF EARTHEN FILL AND PAVING MATERIALS ABOVE VAULT TO BETWEEN 2'-6" MINIMUM AND 5'-9" MAXIMUM. SEE CIVIL DRAWINGS FOR FINAL GRADING. LIMIT DEPTH OF EARTHEN FILL AND PAVING MATERIALS WITHIN 20'-0" OF OUTSIDE EDGE OF VAULT WALLS TO 8'-6" ABOVE VAULT. SEE DETAIL 11/VS4.0 FOR MORE INFORMATION.
9. VAULT ROOF FRAMING PLAN WAS LAID OUT BASED ON A 4' NOMINAL PRECAST PLANK WIDTH. LAYOUTS BASED ON ALTERNATE PLANK WIDTHS SHALL BE SUBMITTED FOR APPROVAL BY THE ENGINEER.
10. PRECAST PLANK THICKNESS TO BE SELECTED BY THE MANUFACTURER BASED ON APPLIED LOADS (12" MIN). CONTRACTOR TO COORDINATE T/WALL ELEVATIONS WITH FINAL PLANK THICKNESS.
11. CONTRACTOR SHALL VERIFY ALL DIMENSIONS, ELEVATIONS, FINISH SURFACES, SLOPES, DRAINS ETC, WITH CIVIL DRAWINGS PRIOR TO START OF CONSTRUCTION. SEE ALSO CIVIL DRAWINGS FOR PIPE LOCATIONS AND INVERT ELEVATIONS.
12. TOP AND BOTTOM OF FOUNDATION SLAB SLOPES LINEARLY BETWEEN NOTED SPOT ELEVATIONS FOR DRAINAGE. SEE DETAIL 11/VS4.0 AND CIVIL DRAWINGS.
13. ▨ INDICATES CAST-IN PLACE PORTION OF VAULT LID.
14. FOUNDATION SLAB BAR PLACEMENT SEQUENCE TO BE AS FOLLOWS:

N-S	BOTTOM
E-W	BOTTOM
E-W	TOP
N-S	TOP

TCA
ARCHITECTURE + PLANNING + DESIGN
6211 ROOSEVELT WAY NORTHEAST
SEATTLE, WA 98115
tel: (206) 522-3830
fax: (206) 522-2456

kpff
1601 Fifth Avenue, Suite 1600
Seattle, WA 98101
206.622.5822
kpff.com

THOMAS RICHARD HUDSON — STATE OF WASHINGTON — 39013 — REGISTERED PROFESSIONAL ENGINEER — 7/21/20

BID SET

No.	Description	Date:

Fire Station 24
City of Kirkland
Kirkland, Washington

Sheet Title:
DETENTION VAULT FOUNDATION AND FRAMING PLANS

Scale: As indicated
Project No.: 2000267
Date: July 21, 2020

Sheet Number:
VS1.0

PRINTED: 7/16/2020 11:29:35 AM FILE: C:\Revit Models\2018\2000267 - Fire Station 24 Detention Vault_Struc_randy.fukuda@kpff.com.rvt

Provided to Builders Exchange of WA, Inc. For usage Conditions Agreement see www.bxwa.com - Always Verify Scal

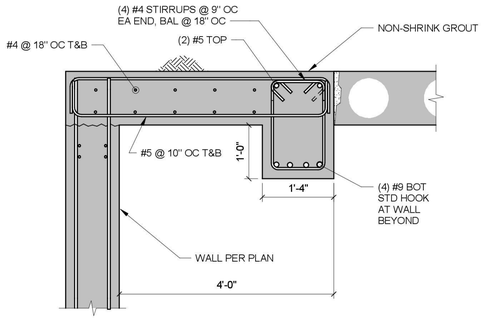

3 BEAM AT CAST-IN-PLACE SLAB

3/4" = 1'-0"

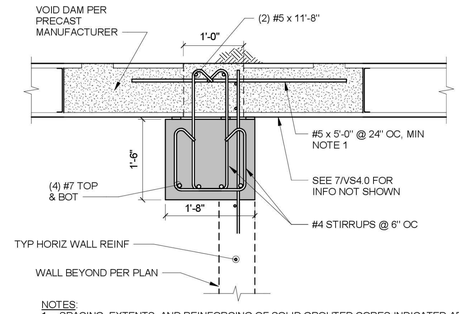

NOTES:
1. SPACING, EXTENTS, AND REINFORCING OF SOLID GROUTED CORES INDICATED ARE MINIMUM. FINAL DESIGN AS REQ'D BY PRECAST DESIGN.

4 HEADER OVER OPENING BETWEEN CHAMBERS

3/4" = 1'-0"

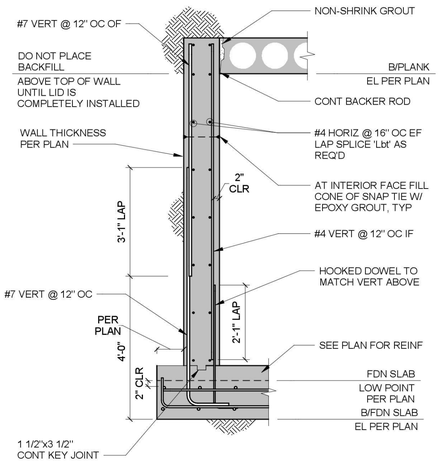

5 WALL SECTION

1/2" = 1'-0"

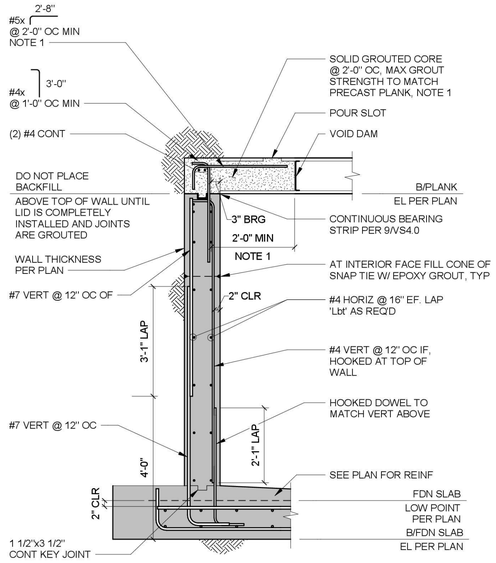

NOTES:
1. SPACING, EXTENTS AND REINFORCING OF SOLID GROUTED CORES INDICATED ARE MINIMUM. FINAL DESIGN AS REQ'D BY PRECAST DESIGN.

6 WALL SECTION

1/2" = 1'-0"

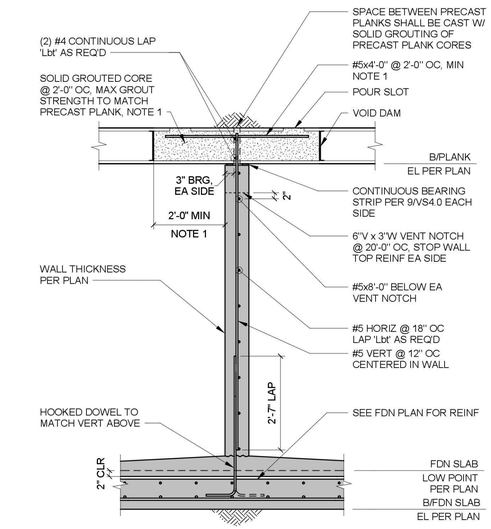

NOTES:
1. SPACING, EXTENTS AND REINFORCING OF SOLID GROUTED CORES INDICATED ARE MINIMUM. FINAL DESIGN AS REQ'D BY PRECAST DESIGN.

7 WALL SECTION

1/2" = 1'-0"

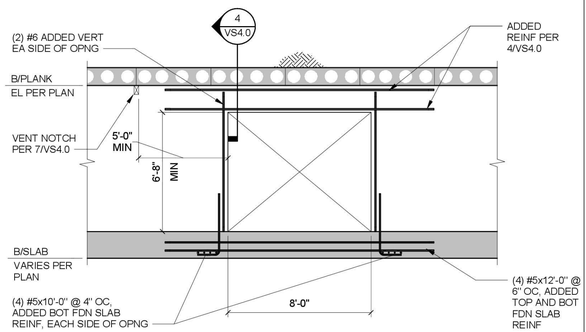

NOTES:
1. LOCATE OPENING PER PLANS.

8 ELEVATION OF OPENING BETWEEN CHAMBERS

1/4" = 1'-0"

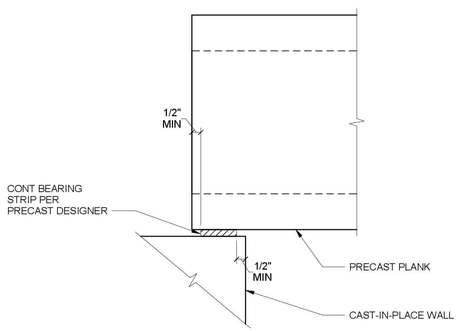

NOTES:
1. BEARING STRESS ON TOP OF WALL NOT TO EXCEED 1500 PSI.

9 TYPICAL PLANK BEARING DETAIL

3" = 1'-0"

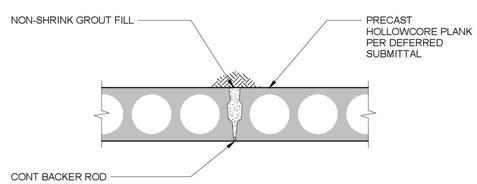

10 TYPICAL GROUTED KEYWAY DETAIL

3/4" = 1'-0"

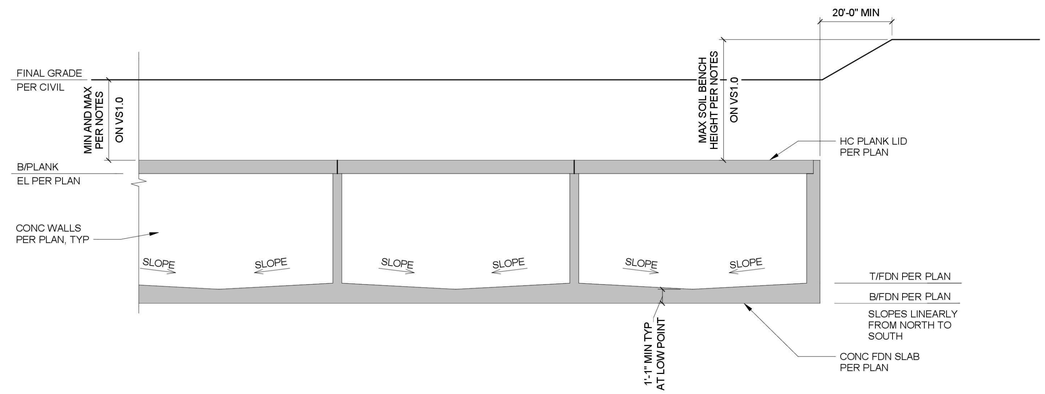

11 DETENTION VAULT SECTION

3/16" = 1'-0"

TCA
ARCHITECTURE + PLANNING + DESIGN
6211 ROOSEVELT WAY
NORTHEAST
SEATTLE, WA 98115
tel: (206) 522-3830
fax: (206) 522-2456

kpff
1601 Fifth Avenue, Suite 1600
Seattle, WA 98101
206.622.5822
kpff.com

BID SET

No.	Description	Date:

Fire Station 24

City of Kirkland
Kirkland, Washington

Sheet Title:

DETENTION VAULT DETAILS

Scale: As indicated
Project No. : 2000267
Date : July 21, 2020

Sheet Number :

VS4.0

PRINTED 7/16/2020 11:29:37 AM FILE C:\Revit Models\2018\1200267 - Fire Station 24 Detention Vault_Struc_randy.fukuda@kpff.com.rvt

Provided to Builders Exchange of WA, Inc. For usage Conditions Agreement see www.bxwa.com - Always Verify Scal

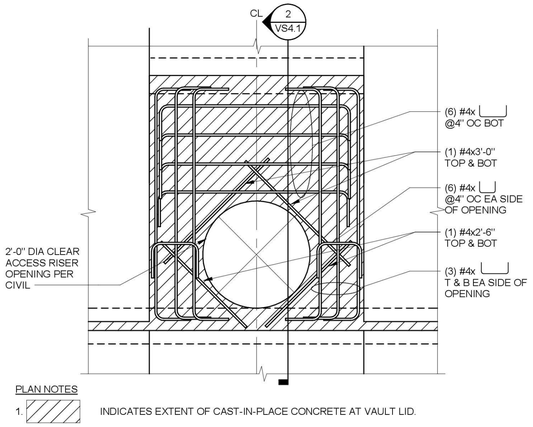

1 PARTIAL PLAN AT ACCESS RISER

3/4" = 1'-0"

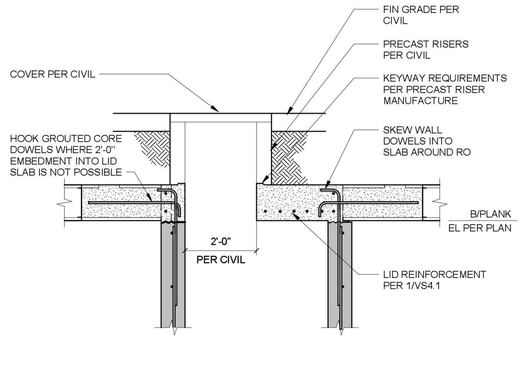

NOTES:
1. LADDER RUNGS AND FALL PROTECTION SYSTEM NOT SHOWN. SEE CIVIL DRAWINGS.
2. SEE VAULT WALL SECTIONS ON VS4.0 FOR ADDITIONAL INFORMATION.

2 PRECAST ACCESS RISER DETAIL

1/2" = 1'-0"

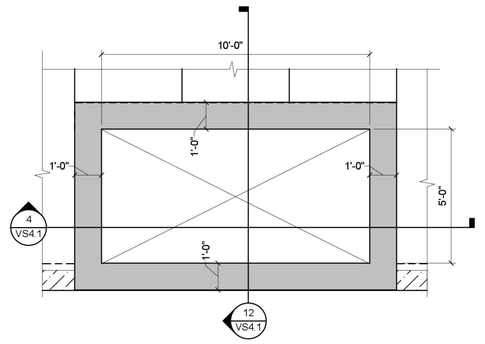

PLAN NOTES

1. INDICATES EXTENT OF CAST-IN-PLACE CONCRETE AT VAULT LID.

3 PARTIAL PLAN AT ACCESS HATCH

3/8" = 1'-0"

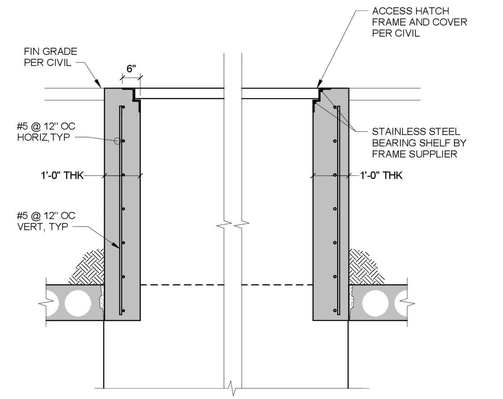

4 ACCESS HATCH SECTION

1/2" = 1'-0"

f'_c = 4,500 PSI
f_y = 60,000 PSI

SIZE	Ld	Ldt	Lb	Lbt	Ldh
#4	19 (28)	25 (37)	25 (37)	32 (48)	9
#5	24 (36)	31 (46)	31 (46)	40 (60)	12
#6	28 (43)	37 (55)	37 (55)	48 (72)	14
#7	42 (62)	54 (81)	54 (81)	70 (105)	17
#8	47 (71)	62 (92)	62 (92)	80 (120)	19
#9	54 (80)	70 (104)	70 (104)	90 (136)	21
#10	60 (90)	78 (117)	78 (117)	102 (153)	24
#11	67 (100)	87 (130)	87 (130)	113 (170)	27

NOTES:
1. USE THE LENGTHS IN THIS SCHEDULE, UNLESS NOTED OTHERWISE.
2. USE LENGTH IN ( ) WHEN BAR COVER IS db OR LESS OR BAR CLEAR SPACING IS 2db OR LESS.
3. A TOP BAR IS A HORIZONTAL BAR WITH MORE THAN 12" OF FRESH CONCRETE CAST BELOW IT.

ABBREVIATIONS

db = BAR DIAMETER
Ld = TENSION DEVELOPMENT LENGTH
Ldt = TENSION DEVELOPMENT LENGTH FOR A TOP BAR
Lb = CLASS B LAP SPLICE LENGTH, 1.3 Ld
Lbt = CLASS B LAP SPLICE LENGTH FOR A TOP BAR, 1.3 Ldt
Ldh = TENSION DEVELOPMENT LENGTH FOR A STANDARD HOOK

5 DEVELOPMENT & SPLICE LENGTH SCHEDULE

12" = 1'-0"

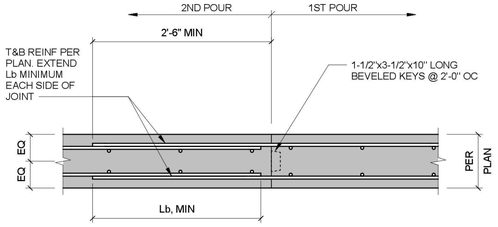

NOTES:
1. CONTRACTOR TO SUBMIT LOCATIONS OF PROPOSED JOINTS TO ENGINEER FOR APPROVAL. JOINTS SHALL BE LOCATED BETWEEN L/5 AND L/3 SPAN, TYPICAL.

6 TYP SLAB CONSTRUCTION JOINT

NO SCALE

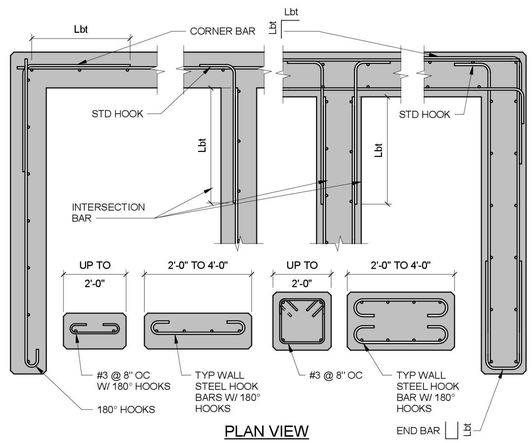

PLAN VIEW

7 TYP CONCRETE WALL DETAILS

NO SCALE

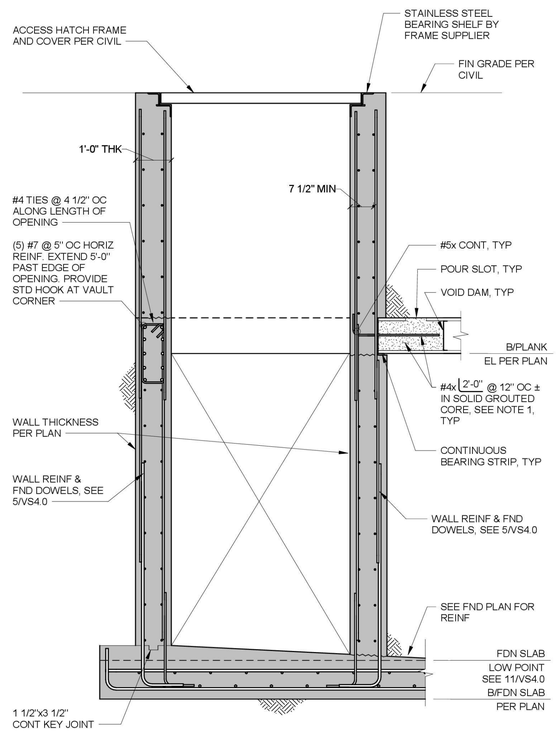

NOTES:
1. SPACING EXTENTS AND REINFORCING OF SOLID GROUTED CORES INDICATED ARE MINIMUM. FINAL DESIGN AS REQ'D BY PRECAST DESIGN.
2. SEE 5 & 7/VS4.0 FOR INFORMATION NOT SHOWN.

12 WALL SECTION AT ACCESS HATCH

1/2" = 1'-0"

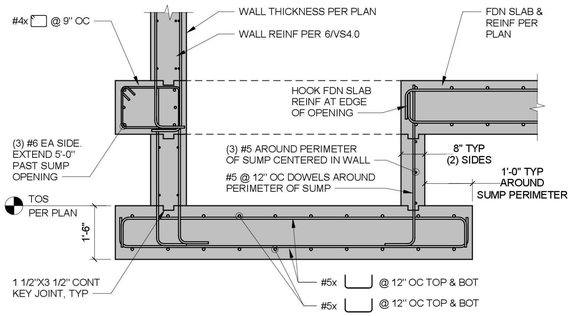

9 WALL SECTION AT SUMP

1/2" = 1'-0"

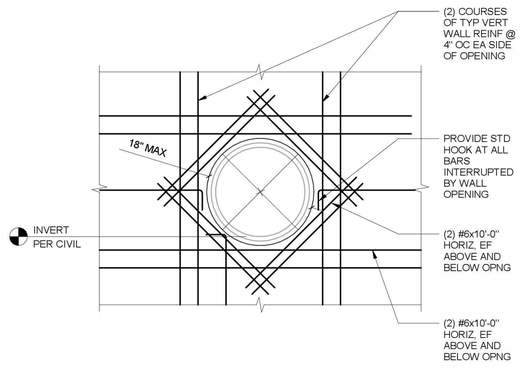

10 TYPICAL WALL PENETRATION DETAIL

NO SCALE

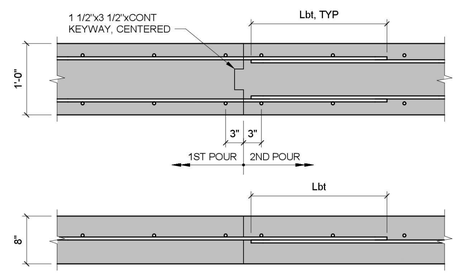

PLAN

NOTES:
1. SEE WALL SECTIONS FOR WALL REINFORCING.
2. CONTRACTOR TO LOCATE WALL CONSTRUCTION JOINTS.

11 TYPICAL WALL CONSTRUCTION JOINT DETAIL

1" = 1'-0"

TCA
ARCHITECTURE + PLANNING + DESIGN
6211 ROOSEVELT WAY NORTHEAST
SEATTLE, WA 98115
tel: (206) 522-3830
fax: (206) 522-2456

kpff
1601 Fifth Avenue, Suite 1600
Seattle, WA 98101
206.622.5822
kpff.com

THOMAS RICHARD HUDSON — STATE OF WASHINGTON — 39013 — REGISTERED PROFESSIONAL ENGINEER — 7/21/20

BID SET

No.	Description	Date:

Fire Station 24
City of Kirkland
Kirkland, Washington

Sheet Title:
DETENTION VAULT DETAILS

Scale: As indicated
Project No. : 2000267
Date : July 21, 2020
Sheet Number :

VS4.1

PRINTED: 7/16/2020 11:29:39 AM FILE: C:\Revit Models\2018\2000267 - Fire Station 24 Detention Vault_Struc_randy.fukuda@kpff.com.rvt

Provided to Builders Exchange of WA, Inc. For usage Conditions Agreement see www.bxwa.com - Always Verify Scal

SECTION 19, TOWNSHIP 26N, RANGE 5E

FIRE STATION 24

NORTHSHORE UTILITY DISTRICT

UTILITY PERMIT

9824 NE 132ND STREET

KIRKLAND, WA 98034

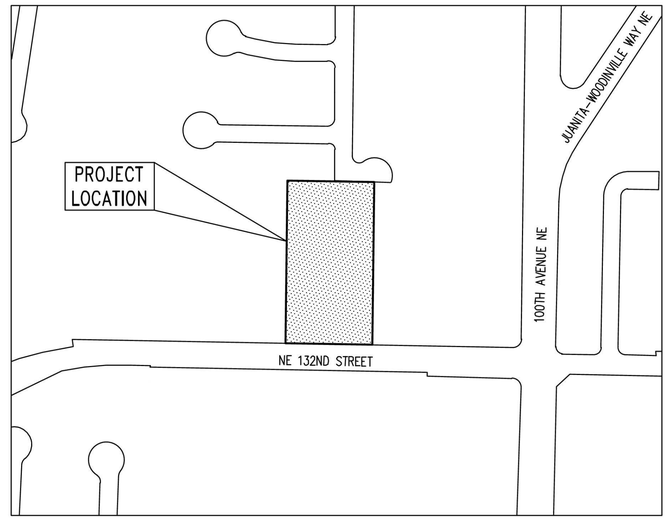

VICINITY MAP
SCALE: 1" = 200'±

SHEET INDEX	
SHEET NO	SHEET TITLE
UT1.0	COVER SHEET
UT1.1	GENERAL NOTES
UT2.0	WATER UTILITY PLAN
UT3.0	SEWER UTILITY PLAN

SURVEY INFORMATION

SURVEY BY: DAVID EVANS AND ASSOCIATES, INC.
DATED: AUGUST 30, 2019

BASIS OF BEARING

THE SOUTHEAST LINE OF SECTION 19 AS BEING NORTH 88° 50'43" WEST PER ZEE LANE SHORT PLAT A.F.# 20150723900005.

VERTICAL DATUM

ELEVATIONS SHOWN HEREON ARE GEOID-DERIVED NAVD88, GEOID 12B SEPARATIONS WERE APPLIED TO SOLVED ELLIPSOID HEIGHTS.

SITE BENCHMARK: CITY OF KIRKLAND CONTROL POINT NO. 133, LOCATED IN THE NORTHWEST QUADRANT OF THE INTERSECTION OF NE 100TH AVE AND NE 132ND ST, ELEVATION: 115.25 U.S. SURVEY FEET

PROJECT TEAM

OWNER
CITY OF KIRKLAND
123 5TH AVENUE
KIRKLAND, WA 98033
ANNEKE DAVIS, PE
(425) 587-3828
adavis@kirklandwa.gov

CIVIL ENGINEER
KPFF CONSULTING ENGINEERS
1601 FIFTH AVENUE, SUITE 1600
SEATTLE, WA 98101
(206) 622-5822
TOM JONES
tom.jones@kpff.com

ARCHITECT
TCA ARCHITECTURE PLANNING
6211 ROOSEVELT WAY NE
SEATTLE, WA 98115
(206) 522-3830
FOREST HOOKER
forest@tca-inc.com

SURVEYOR
DAVID EVANS AND ASSOCIATES INC.
1620 W MARINE VIEW DRIVE
EVERETT, WA 98201
(425) 405-1513
GIL LAAS, PLS
gjla@deainc.com

GEOTECHNICAL
HWA GEOSCIENCES INC
21312 30TH DRIVE SE, SUITE 110
BOTHLL, WA 98021
(425) 774-0106
BRYAN HAWKINS, PE
bhawkins@hwageo.com

LANDSCAPE
AHBL INC
1206 6TH AVENUE, SUITE 1620
SEATTLE, WA 98101
(206) 267-2425
MEREDITH SESSIONS
msessions@ahbl.com

SERVICE PROVIDERS:

WATER
NORTHSHORE UTILITY DISTRICT
6830 NE 185TH STREET
KENMORE, WA 98028
(425) 398-4400

SEWER
NORTHSHORE UTILITY DISTRICT
6830 NE 185TH STREET
KENMORE, WA 98028
(425) 398-4400

STORM
CITY OF KIRKLAND
123 5TH AVENUE
KIRKLAND, WA 98033
(425) 587-3800

POWER
PUGET SOUND ENERGY
10885 NE 47TH STREET, SUITE 1200
PO BOX 97034
BELLEVUE, WA 98009
(425) 454-6363
(888) 225-5773

GAS
PUGET SOUND ENERGY
10885 NE 47TH STREET, SUITE 1200
PO BOX 97034
BELLEVUE, WA 98009
(425) 454-6363
(888) 225-5773

SURVEY LEGEND

FOUND IRON ROD AS NOTED	●
FOUND MONUMENT AS NOTED	⊕
WATER TONE LINE	———
SANITARY SEWER LINE	———
OVERHEAD UTILITY LINE	———
POWER TONE LINE	———
GAS TONE LINE	———
TELEPHONE TONE LINE	———
TRAFFIC SIGNAL BOX	TS
ELECTRICAL BOX	E
WATER VAULT	W
ELECTRIC GROUND ROD	●
STORM DRAIN MANHOLE	Ⓓ
SEWER MANHOLE	Ⓢ
CATCH BASIN	
SIGN	
STREET LIGHT	
GUY ANCHOR	
UTILITY POLE	
WATER VALVE	⊗ WV
WATER METER	⊠ WM
GAS METER	⊠ GM
FIRE HYDRANT	
CURB & GUTTER	C&G
EXTRUDED CURB	EC
EXTRUDED CURB	EC
ELECTRICAL TRANSFORMER	
BOLLARD	●
MAILBOX	
FIRE DEPARTMENT CONNECTION	FDC
AREA DRAIN	
AREA LIGHT	
CONIFEROUS TREE	

CONTRACTOR IS ALERTED TO THE FACT THAT WORK WILL BE ACCOMPLISHED AROUND ACTIVE PSE GAS AND ENERGIZED ELECTRICAL FACILITIES THAT ARE SERVING EXISTING CUSTOMERS. CONTRACTOR SHALL COORDINATE WITH PSE TO DETERMINE WHICH FACILITIES ARE ACTIVE AND ENERGIZED AND SHALL IMPLEMENT SAFETY PROCEDURES PER PSE REQUIREMENTS. CONTRACTOR SHALL COORDINATE WITH PSE TO ENSURE THAT FACILITIES ARE IN PLACE TO MAINTAIN SERVICE TO CUSTOMERS THROUGHOUT CONSTRUCTION.

811 Call 811 two business days before you dig

TCA
ARCHITECTURE + PLANNING + DESIGN
6211 ROOSEVELT WAY NORTHEAST
SEATTLE, WA 98115
tel: (206) 522-3830
fax: (206) 522-2456

kpff
1601 5th Avenue, Suite 1600
Seattle, WA 98101
206.622.5822
www.kpff.com

JEREMY S. FRANS — STATE OF WASHINGTON — 39847 — REGISTERED PROFESSIONAL ENGINEER
7/20/2020

BID SET

No.	Description	Date

Project Title:

FIRE STATION 24
City of Kirkland
Kirkland, Washington

Sheet Title:

COVER SHEET

Scale: AS NOTED
Project No. 1700011
Date : JULY 21, 2020

Sheet Number :

UT1.0

Jul 20, 2020 - 12:21pm lareaod Z:\1700001-1700999\1700011 (Kirkland Fire Sta 24)\CAD\Design\CD\WUD C1.0KFS-24 CVR.dwg

Provided to Builders Exchange of WA, Inc. For usage Conditions Agreement see www.bxwa.com - Always Verify Scal

SECTION 19, TOWNSHIP 26N, RANGE 5E

GENERAL CONSTRUCTION NOTES

1. ALL WORK SHALL CONFORM TO THE CURRENT EDITION OF NORTHSHORE UTILITY DISTRICT STANDARD PLANS AND SPECIFICATIONS, CURRENT EDITION OF CITY OF KIRKLAND PRE-APPROVED PLANS AND THE CURRENT EDITION OF WSDOT STANDARD SPECIFICATIONS. A COPY OF THESE DOCUMENTS SHALL BE ON SITE DURING CONSTRUCTION.
2. A COPY OF THE APPROVED PLAN MUST BE ON SITE WHENEVER CONSTRUCTION IS IN PROGRESS.
3. ERRORS AND OMISSIONS ON THE PERMITTED PLANS MUST BE CORRECTED BY THE ENGINEER AND APPROVED BY THE CITY OF KIRKLAND.
4. ALL PERMITS REQUIRED FOR WORK MUST BE OBTAINED PRIOR TO THE START OF CONSTRUCTION.
5. PRIOR TO THE START OF CONSTRUCTION , THE CONTRACTOR SHALL SCHEDULE AND ATTEND A PRECONSTRUCTION MEETING WITH THE CITY OF KIRKLAND AND NORTHSHORE UTILITY DISTRICT.
6. ALL DAMAGE TO CITY INFRASTRUCTURE CAUSED BY THE CONSTRUCTION SHALL BE IMMEDIATELY REPORTED AND REPAIRED AS REQUIRED BY THE CITY OF KIRKLAND.
7. DATUM: NAVD 88.
8. SURVEYING AND STAKING OF ALL IMPROVEMENTS SHALL BE COMPLETED PRIOR TO CONSTRUCTION.
9. THE CONTRACTOR SHALL BE RESPONSIBLE FOR REFERENCING AND REPLACING ALL MONUMENTS THAT MAY BE DISTURBED, DESTROYED OR REMOVED BY THE PROJECT AND SHALL FILE AN APPLICATION FOR PERMIT TO REMOVE OR DESTROY A SURVEY MONUMENT WITH THE WASHINGTON STATE DEPARTMENT OF NATURAL RESOURCES, PURSUANT TO RCW 58.24.040(8).
10. THE CONTRACTOR SHALL LOCATE AND PROTECT ALL CASTINGS AND UTILITIES DURING CONSTRUCTION.
11. THE CONTRACTOR SHALL CONTACT THE UNDERGROUND UTILITIES LOCATOR SERVICE (1-800-424-5555) AT LEAST 48 HOURS PRIOR TO CONSTRUCTION.
12. IT IS THE SOLE RESPONSIBILITY OF THE CONTRACTOR TO VERIFY THE ACCURACY OF ALL UTILITY LOCATIONS SHOWN AND TO FURTHER DISCOVER AND AVOID ANY OTHER UTILITIES NOT SHOWN WHICH MAY BE AFFECTED BY THE IMPLEMENTATION OF THIS PLAN.
13. THE CONTRACTOR SHALL ADJUST ALL EXISTING MANHOLE RIMS, DRAINAGE STRUCTURE LIDS, VALVE BOXES, AND UTILITY ACCESS STRUCTURES TO FINISH GRADE WITHIN AREAS AFFECTED BY THE PROPOSED IMPROVEMENTS.
14. THE CONTRACTOR SHALL PROVIDE FOR ALL TESTING AS REQUIRED BY PROJECT OWNER.
15. INSPECTION AND ACCEPTANCE OF ALL WORK SHALL BE DONE BY REPRESENTATIVES OF OWNER. IT SHALL BE THE CONTRACTOR'S RESPONSIBILITY TO COORDINATE AND SCHEDULE APPROPRIATE INSPECTIONS ALLOWING FOR PROPER ADVANCE NOTICE. THE OWNER MAY REQUIRE REMOVAL AND RECONSTRUCTION OF ANY ITEMS PLACED THAT DO NOT MEET STANDARDS AND SPECIFICATIONS OR THAT WERE CONSTRUCTED WITHOUT APPROPRIATE INSPECTIONS.
16. THE CONTRACTOR SHALL PROVIDE A PLAN FOR STORMWATER AND EROSION CONTROL AND INSTALL, MAINTAIN AND REMOVE TEMPORARY FACILITIES FOR CONSTRUCTION ACTIVITIES. AS CONSTRUCTION PROGRESSES AND CONDITIONS DICTATE, ADDITIONAL CONTROL FACILITIES MAY BE REQUIRED. DURING THE COURSE OF CONSTRUCTION IT SHALL BE THE OBLIGATION AND RESPONSIBILITY OF THE CONTRACTOR TO ADDRESS ANY NEW CONDITIONS THAT MAY BE CREATED BY THE CONTRACTOR'S ACTIVITIES AND TO PROVIDE ADDITIONAL FACILITIES THAT MAY BE NEEDED TO PROTECT ADJACENT PROPERTIES.
17. ALL TRAFFIC CONTROL SHALL BE IN ACCORDANCE WITH THE CITY OF KIRKLAND STANDARDS. AN APPROVED TRAFFIC CONTROL PLAN WILL BE REQUIRED FOR ALL ARTERIAL STREETS PRIOR TO BEGINNING CONSTRUCTION.
18. ALL WORK PERFORMED BY UTILITY PURVEYORS TO REPAIR, REMOVE OR RELOCATE EXISTING UTILITIES SHALL BE DONE AT THE CONTRACTOR'S EXPENSE.
19. CARE SHALL BE EXERCISED WHEN EXCAVATING OR REMOVING PAVEMENT NEAR EXISTING CHARGED WATER MAINS. CAST IRON WATER MAINS ARE KNOWN TO BE SENSITIVE TO EXCESSIVE VIBRATION. COORDINATE PROTECTION METHODS WITH NORTHSHORE UTILITY DISTRICT.

NORTHSHORE UTILITY DISTRICT SEWER GENERAL NOTES

1. ALL WORK AND MATERIALS SHALL BE IN ACCORDANCE WITH THE DEVELOPER EXTENSION AGREEMENT, THE STANDARD SPECIFICATIONS, STANDARD DETAILS OF NORTHSHORE UTILITY DISTRICT.

UTILITY LOCATES:

2. THE APPROXIMATE LOCATIONS OF EXISTING UTILITIES ARE SHOWN ON PLANS AND PROFILES FOR CONVENIENCE. THE CONTRACTOR SHALL BE RESPONSIBLE FOR VERIFICATION OF UTILITY LOCATIONS SHOWN AND FOR DISCOVERY OF POSSIBLE ADDITIONAL UTILITIES NOT SHOWN ON PLANS.
3. IT SHALL BE THE RESPONSIBILITY OF THE CONTRACTOR TO HAVE LOCATED, BY APPROPRIATE UTILITY DISTRICTS OR COMPANIES, ALL UNDERGROUND UTILITIES PRIOR TO BEGINNING CONSTRUCTION.
4. FOR UTILITY LOCATES IN KING COUNTY, CALL 1-800-424-5555 PRIOR TO DIGGING.

PERMITS:

5. THE DEVELOPER IS RESPONSIBLE FOR OBTAINING ALL REGULATORY PERMITS EXCEPT THE RIGHT-OF-WAY PERMIT, WHICH NORTHSHORE UTILITY DISTRICT OBTAINS.
6. ALL WORK IN RIGHTS-OF-WAY SHALL BE IN ACCORDANCE WITH THE REQUIREMENTS OF THE PERMITTING AGENCY.

PRE-CON:

7. A PRE-CONSTRUCTION CONFERENCE SHALL BE HELD AT NORTHSHORE UTILITY DISTRICTS OFFICE PRIOR TO THE START OF CONSTRUCTION. DISTRICT STAFF WILL NOTIFY THE APPROPRIATE AGENCIES OR REPRESENTATIVES.

SURVEYING:

8. PRIOR TO CONSTRUCTING ANY SEWER MAINS, THE STREET CENTERLINES OF THE DEVELOPMENT, CENTER OF CUL-DE-SACS, ALL SEWER LINE EASEMENTS AND ALL LOT CORNERS SHALL BE STAKED. THE MAXIMUM STATIONING INTERVAL SHALL BE 50 FEET WITH THE STATION NUMBER ON EACH STAKE.
9. HORIZONTAL CONTROL DATA SHALL BE NAD 83/91. VERTICAL CONTROL SHALL BE NAVD-88 DATUM.
10. AT THE CONCLUSION OF CONSTRUCTION, THE DEVELOPER'S REGISTERED PROFESSIONAL SURVEYOR SHALL PREPARE A DRAWING BASED ON THE SURVEYED LOCATION OF ALL AT-GRADE APPURTENANCES INSTALLED, INCLUDING BUT NOT LIMITED TO, LOCATION OF EXISTING MANHOLES INCLUDING RIM & ALL INVERT ELEVATIONS AND NEW MANHOLE LOCATIONS INCLUDING RIM & ALL INVERT ELEVATIONS. THE DRAWING SHALL BE PROVIDED TO THE DISTRICT IN AUTOCAD FORMAT, R 2000 OR NEWER. IN ADDITION, ALL SEWER EASEMENTS SHALL BE STAKED AND FLAGGED AT THEIR INTERSECTION WITH PROPERTY LINES AND AT 25 FOOT STATIONS ALONG THE EASEMENT LINES.

CONSTRUCTION:

11. THE SEWER MAIN SHALL BE PLACED FIVE (5) FEET SOUTH OR WEST FROM THE CENTERLINE OF ROADWAY,UNLESS OTHERWISE SHOWN ON THE PLAN.
12. A MINIMUM TEN (10) FOOT HORIZONTAL SEPARATION MUST BE MAINTAINED BETWEEN THE SANITARY SEWER LINE AND THE WATER MAIN.
13. AFTER TRENCH BACKFILL AND COMPACTION, PVC SANITARY SEWER MAINS SHALL BE TESTED FOR DEFLECTION AS SPECIFIED IN SECTION 7-17.3(2)G OF THE WASHINGTON STATE DEPARTMENT OF TRANSPORTATION'S STANDARD SPECIFICATIONS FOR ROAD, BRIDGE AND MUNICIPAL CONSTRUCTION. TEST OBSERVATION AND INSPECTION BY NORTHSHORE UTILITY DISTRICT.
14. WHENEVER SANITARY SEWER CROSSES BELOW A WATER MAIN, THE SEWER SHALL BE LAID AT SUCH AN ELEVATION THAT THE TOP OF THE SEWER LINE IS AT LEAST EIGHTEEN (18) INCHES BELOW THE BOTTOM OF THE WATER MAIN.
15. ALL MANHOLES SHALL HAVE A MINIMUM DROP OF ONE-TENTH (0.10) FOOT AND FIVETENTHS (0.50) FOOT MAXIMUM DROP BETWEEN INVERT IN AND INVERT OUT.
16. MANHOLES IN THE PUBLIC RIGHT-OF-WAY SHALL BE A MINIMUM OF EIGHT(8) FEET IN DEPTH OR PER APPROVED PLANS.
17. MANHOLES NOT IN PAVED PUBLIC RIGHT-OF-WAY TO HAVE LOCKING LIDS AND ALL FRAMES SHALL BE LOCKING TYPE PER THE STANDARD DETAILS.
18. FOR PIPE SLOPES GREATER THAN 20%, RESTRAINED-JOINT DUCTILE IRON PIPE SHALL BE USED FOR EVERY JOINT.
19. SIDE SEWER STUBS SHALL HAVE A MINIMUM OF TWO(2) PERCENT SLOPE AND MAXIMUM OF FORTY-FIVE (45) DEGREE SLOPE. STUBS SHALL BE 6"MINIMUM DIAMETER. FOR ALL STUBS LESS THAN EIGHT(8) FEET IN DEPTH: INSTALL A THREE(3) INCH WIDE GREEN METALLIC DETECTOR TAPE 12"ABOVE THE PIPE, THE ENTIRE LENGTH OF THE STUB CONTINUING UP THE 2X4 SIDE SEWER MARKER POST. IDENTIFICATION ON THE TAPE SHALL INCLUDE THE WORDS 'SANITARY SEWER'.

MATERIALS:

20. SANITARY SEWER PIPE LESS THAN EIGHTEEN (18) FEET IN DEPTH AND LESS THAN 20% SLOPE SHALL BE PVC CONFORMING TO ASTM D-3034, SDR-35 AND SHALL BE BEDDED WITH CLEAN, GRANULAR MANUFACTURED PEA GRAVEL FROM 4"UNDER TO 6"OVER THE PIPE. SANITARY SEWER PIPE EIGHTEEN (18) FEET DEEP AND GREATER, OR ON A SLOPE OF 20% OR MORE, SHALL BE DUCTILE-IRON MINIMUM THICKNESS CLASS 52, CEMENT-MORTAR LINED AND TYTON JOINT. ALL DUCTILE-IRON PIPE MUST MEET THE REQUIREMENTS OF AWWA C-151.
21. HIGH-DENSITY POLYETHYLENE (HDPE) SHALL BE SDR-11 MINIMUM.

NORTHSHORE UTILITY DISTRICT WATER GENERAL NOTES

1. ALL WORK AND MATERIALS SHALL BE IN ACCORDANCE WITH THE DEVELOPER EXTENSION AGREEMENT, THE STANDARD SPECIFICATIONS AND THE STANDARD DETAILS OF NORTHSHORE UTILITY DISTRICT.

UTILITY LOCATES:

2. THE APPROXIMATE LOCATIONS OF EXISTING UTILITIES ARE SHOWN ON PLANS AND PROFILES FOR CONVENIENCE. THE CONTRACTOR SHALL BE RESPONSIBLE FOR VERIFICATION OF UTILITY LOCATIONS SHOWN AND FOR DISCOVERY OF POSSIBLE ADDITIONAL UTILITIES NOT SHOWN ON PLANS.
3. IT SHALL BE THE RESPONSIBILITY OF THE CONTRACTOR TO HAVE LOCATED,BY APPROPRIATE UTILITY DISTRICTS OR COMPANIES, ALL UNDERGROUND UTILITIES PRIOR TO BEGINNING CONSTRUCTION.
4. FOR UTILITY LOCATES IN KING COUNTY, CALL 1-800-424-5555 PRIOR TO DIGGING.

PERMITS:

5. THE DEVELOPER IS RESPONSIBLE FOR OBTAINING ALL REGULATORY PERMITS EXCEPT THE RIGHT-OF-WAY PERMIT, WHICH NORTHSHORE UTILITY DISTRICT OBTAINS.
6. ALL WORK IN RIGHTS-OF-WAY SHALL BE IN ACCORDANCE WITH THE REQUIREMENTS OF THE PERMITTING AGENCY.

PRE-CON:

7. A PRE-CONSTRUCTION CONFERENCE SHALL BE HELD AT NORTHSHORE UTILITY DISTRICTS OFFICE PRIOR TO THE START OF CONSTRUCTION. DISTRICT STAFF WILL NOTIFY THE APPROPRIATE AGENCIES OR REPRESENTATIVES.

SURVEYING:

8. PRIOR TO CONSTRUCTING ANY WATER MAINS, THE STREET CENTERLINES OF THE DEVELOPMENT, CENTER OF CUL-DE-SACS, ALL WATERLINE EASEMENTS AND ALL LOT CORNERS SHALL BE STAKED. THE MAXIMUM STATIONING INTERVAL WILL BE 50 FEET WITH THE STATION NUMBER ON EACH STAKE.
9. HORIZONTAL CONTROL DATA SHALL BE NAD 83/91. VERTICAL CONTROL SHALL BE NAVD-88 DATUM.
10. AT THE CONCLUSION OF CONSTRUCTION, THE DEVELOPER'S REGISTERED PROFESSIONAL SURVEYOR SHALL PREPARE A DRAWING BASED ON THE SURVEYED LOCATION OF ALL APPURTENANCES INSTALLED, INCLUDING BUT NOT LIMITED TO, WATER MAIN, METER BOXES, BLOWOFFS, VALVES BOXES, HYDRANTS AND BENDS. THE DISTRICT WILL PROVIDE LOCATES TO ASSIST THE SURVEYOR IN LOCATING THE WATER MAIN BETWEEN APPURTENANCES AND LOCATING THE BENDS. THE DRAWING SHALL BE PROVIDED TO THE DISTRICT IN AUTOCAD FORMAT, R 2000 OR NEWER. IN ADDITION, ALL WATER EASEMENTS SHALL BE STAKED AND FLAGGED AT THEIR INTERSECTION WITH PROPERTY LINES AND AT 25-FOOT STATIONS ALONG THE EASEMENT LINES.

CONSTRUCTION:

11. THE WATER MAIN SHALL BE PLACED AS SHOWN ON PLAN.
12. A MINIMUM TEN(10) FOOT HORIZONTAL SEPARATION MUST BE MAINTAINED BETWEEN THE SANITARY SEWER LINE AND THE WATER MAIN.
13. A FIVE(5) FOOT HORIZONTAL SEPARATION SHALL BE MAINTAINED BETWEEN ALL WATER FACILITIES AND UNDERGROUND POWER AND TELEPHONE FACILITIES, UNLESS OTHERWISE APPROVED BY THE DISTRICT.
14. DISTRICT VALVES SHALL ONLY BE OPERATED BY DISTRICT PERSONNEL.

MATERIALS:

15. ALL WATER MAIN PIPING SHALL BE DUCTILE-IRON MINIMUM THICKNESS CLASS 52, CEMENT-MORTAR LINED AND TYTON JOINT. ALL WATER MAIN PIPING TO MEET THE REQUIREMENTS OF AWWA C-151.
16. ALL WATER MAIN FITTINGS SHALL BE CEMENT-MORTAR LINED AND MEET THE REQUIREMENTS OF AWWA C-153.
17. POLYETHYLENE ENCASEMENT TO MEET THE AWWA STANDARD C-105. ANY TEARS OR OPENINGS MADE FOR SERVICES OR TAP'S SHALL BE REPAIRED WITH AN ADHESIVE TAPE.
18. ALL WATER MAIN PIPES AND SERVICES SHALL BE INSTALLED WITH A 14 (FOURTEEN) GAUGE, CONTINUOUS, SOLID-CORE, NEOPRENE COATED LOCATING WIRE. ANY CONNECTIONS OR SPLICES SHALL BE MADE WITH SPLIT-BOLT WIRE CONNECTORS.

PLACEMENT:

19. FIRE HYDRANT LOCATIONS TO BE APPROVED BY THE FIRE MARSHAL OF JURISDICTION.
20. WATER SERVICE LINE AND METER LOCATIONS WILL BE COORDINATED WITH THE DEVELOPER'S ENGINEER AFTER A THOROUGH REVIEW OF ALL UTILITY FACILITIES.
    - 20.1. THE METER LOCATION SHALL BE WITHIN THREE (3) FEET OF THE PROPERTY LINE THAT IS PERPENDICULAR TO THE RIGHT-OF-WAY AND WITHIN ONE(1) FOOT OF THE EDGE OF PROPERTY ON THE RIGHT-OF-WAY SIDE UNLESS OTHERWISE APPROVED IN WRITING BY THE DISTRICT.
    - 20.2. AFTER INSTALLATION OF THE METER AND BOX, A 2X4 BOARD PAINTED WHITE WITH 'WATER SERVICE'STENCILED ONTO IT WILL BE DRIVEN INTO THE GROUND BEHIND THE METER BOX.

811 Call 811 two business days before you dig

Z:\1700001-1700999\1700011 (Kirkland Fire Sta 24)\CAD\Design\CD\WUD C1.00KFS-24 CVR.dwg
Jul 20, 2020 - 12:21pm tleresad

TCA
ARCHITECTURE + PLANNING + DESIGN
6211 ROOSEVELT WAY NORTHEAST
SEATTLE, WA 98115
tel: (206) 522-3830
fax: (206) 522-2456

kpff
1601 5th Avenue, Suite 1600
Seattle, WA 98101
206.622.5822
www.kpff.com

CHRISTOPHER S. PETERS — STATE OF WASHINGTON — 39847 — REGISTERED PROFESSIONAL ENGINEER

7/20/2020

BID SET

No.	Description	Date:

Project Title:

FIRE STATION 24
City of Kirkland
Kirkland, Washington

Sheet Title:

GENERAL NOTES

Scale: AS NOTED
Project No. : 1700011
Date : JULY 21, 2020

Sheet Number :

UT1.1

Provided to Builders Exchange of WA, Inc. For usage Conditions Agreement see www.bxwa.com - Always Verify Scal

SECTION 19, TOWNSHIP 26N, RANGE 5E

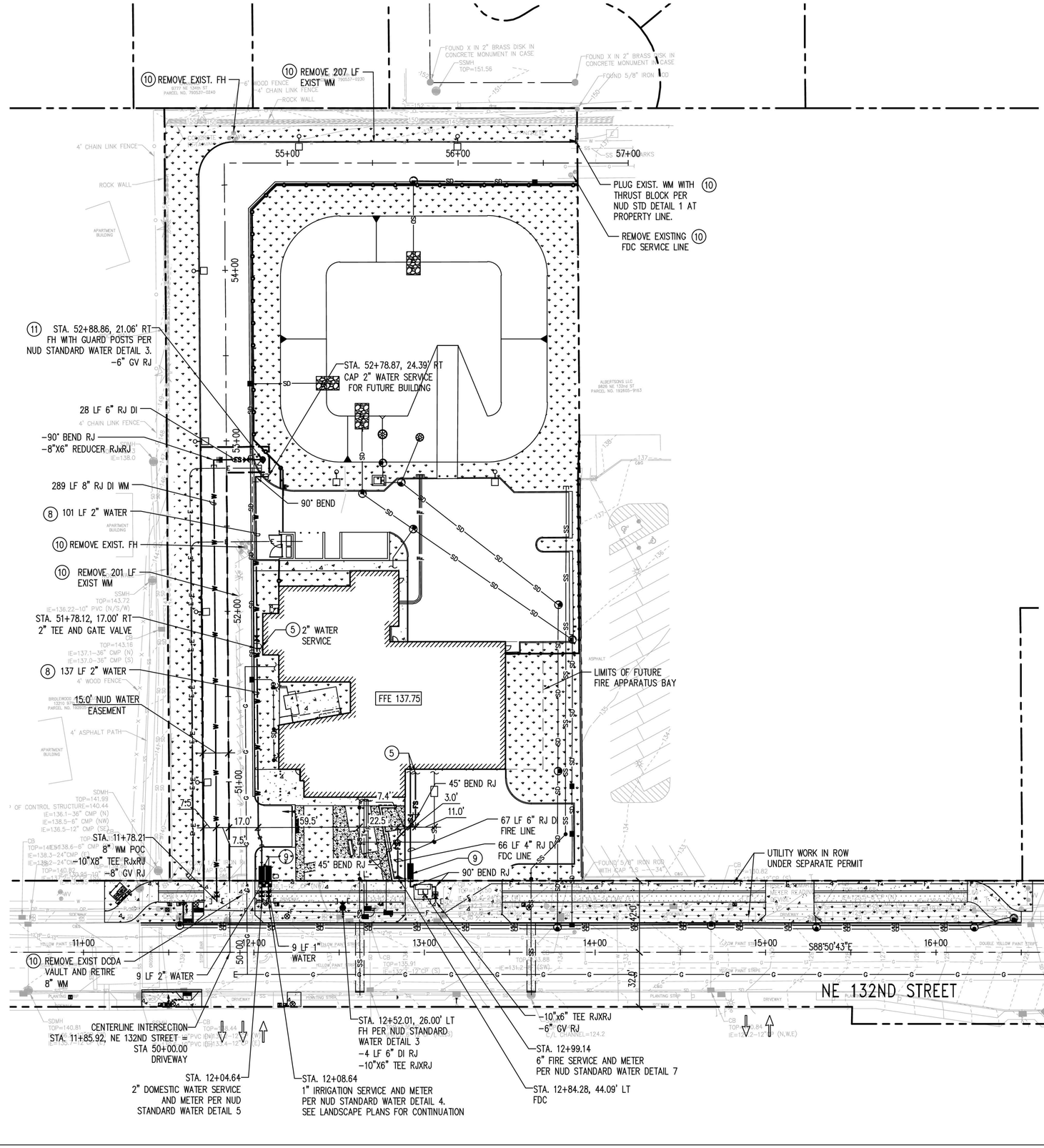

UTILITY NOTES:

1. PRIOR TO ANY SITE CONSTRUCTION CONTRACTOR SHALL POT HOLE UTILITIES AT POINTS OF CONNECTION AND PROVIDE PIPE SIZE, INVERT ELEVATION AND LOCATION INFORMATION TO ENGINEER.
2. EXISTING DRAINAGE RIMS, DRAINAGE STRUCTURE LIDS, VALVE BOXES AND UTILITY ACCESS STRUCTURES SHALL BE ADJUSTED TO FINISHED GRADE WITHIN AREAS AFFECTED BY PROPOSED IMPROVEMENTS.
3. POWER, GAS, FIBER AND TELECOMMUNICATIONS SERVICES UNDER SEPARATE PERMIT.
4. REFER TO ARCHITECTURAL AND STRUCTURAL PLANS FOR FINISHED FLOOR ELEVATIONS.

(5) SEE MEP PLANS FOR UTILITY POC CONTINUATION

6. WATER LINES SHALL HAVE A MINIMUM 3-FEET OF COVER, UNLESS OTHERWISE NOTED.
7. DIMENSIONS SHOWN ARE TO CENTERLINE ALIGNMENT, CENTERLINE OF UTILITY LINES OR CENTER OF UTILITY STRUCTURE, UNLESS OTHERWISE NOTED. SEE HORIZONTAL CONTROL PLAN UNDER CITY OF KIRKLAND BUILDING PERMIT. THESE PLANS SHALL BE USED IN CONJUNCTION WITH THE CITY OF KIRKLAND BUILDING PERMIT PLAN SET.

(8) WATER PIPES 2-INCHES OR SMALLER SHALL BE HDPE, PE4710, SIDR7 WITH A 250 PSI PRESSURE RATING AND SHALL CONFORM TO NORTHSHORE UTILITY DISTRICT (NUD) WATER STANDARD SPECIFICATIONS. WATER LINES LARGER THAN 2-INCHES SHALL BE DUCTILE IRON PIPE CLASS 52, CEMENT LINED CONFORMING TO AWWA C151 AND SHALL CONFORM TO NUD STANDARD SPECIFICATIONS.

(9) BACKFLOW ASSEMBLY PER NUD STANDARD WATER DETAIL 14.

(10) CONTRACTOR SHALL COORDINATE WITH NORTHSHORE UTILITY DISTRICT (NUD) FOR ALL ABANDONING, CAPPING AND REMOVAL OF SEWER AND WATER INFRASTRUCTURE SERVICES.

(10) CONTRACTOR SHALL INSTALL FIRE HYDRANT GUARD POSTS PER NUD STANDARD SPECIFICATIONS TO PROVIDE MIN. 3' CLEAR OF FIRE HYDRANT. COORDINATE FINAL LOCATION IN THE FIELD WITH NUD.

LEGEND

- PROPERTY/ROW LINE
- PROPOSED BUILDING
- TYPE 1 CATCH BASIN
- TYPE 2 CATCH BASIN
- CLEANOUT
- STORM DRAIN LINE
- SANITARY SEWER LINE
- WATER SERVICE LINE
- FIRE SERVICE LINE
- GAS SERVICE LINE
- FIRE HYDRANT

Call 811 two business days before you dig

Z:\1700001-1700999\1700011 (Kirkland Fire Sta 24)\0400\Design\CD\WUD C2.0WFS-24 UT.dwg
Jul 20, 2020 - 12:21pm tomead

TCA
ARCHITECTURE + PLANNING + DESIGN
6211 ROOSEVELT WAY NORTHEAST
SEATTLE, WA 98115
tel: (206) 522-3830
fax: (206) 522-2456

kpff
1601 5th Avenue, Suite 1600
Seattle, WA 98101
206.622.5822
www.kpff.com

JEREMY S. FRIES — STATE OF WASHINGTON — 39847 — REGISTERED PROFESSIONAL ENGINEER

7/20/2020

BID SET

No.	Description	Date

Project Title:

FIRE STATION 24
City of Kirkland
Kirkland, Washington

Sheet Title:

WATER UTILITY PLAN

Scale: AS NOTED
Project No. 1700011
Date: JULY 21, 2020

Sheet Number:

UT2.0

Provided to Builders Exchange of WA, Inc. For usage Conditions Agreement see www.bxwa.com - Always Verify Scal

SECTION 19, TOWNSHIP 26N, RANGE 5E

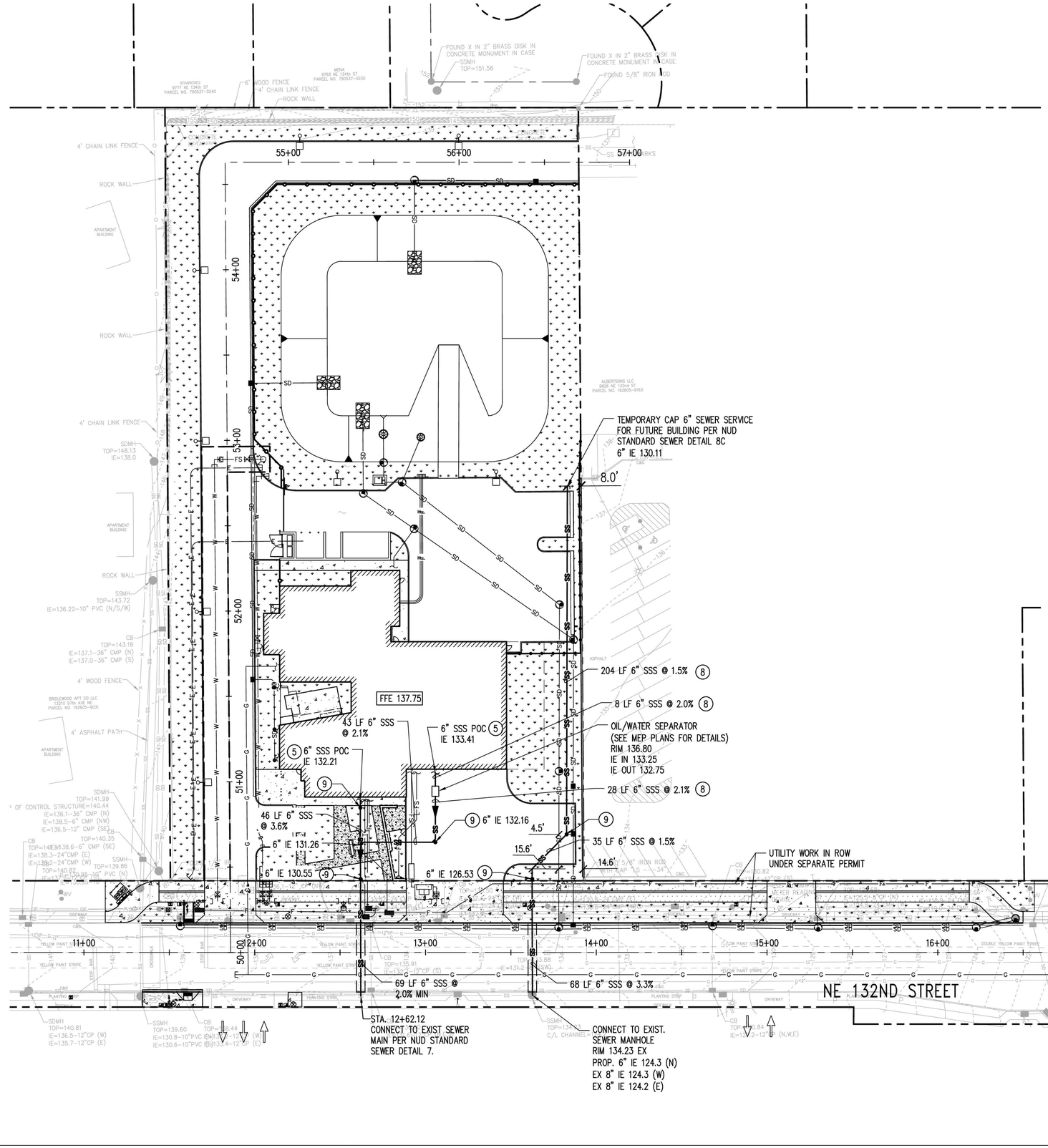

UTILITY NOTES:

1. PRIOR TO ANY SITE CONSTRUCTION CONTRACTOR SHALL POT HOLE UTILITIES AT POINTS OF CONNECTION AND PROVIDE PIPE SIZE, INVERT ELEVATION AND LOCATION INFORMATION TO ENGINEER.
2. EXISTING DRAINAGE RIMS, DRAINAGE STRUCTURE LIDS, VALVE BOXES AND UTILITY ACCESS STRUCTURES SHALL BE ADJUSTED TO FINISHED GRADE WITHIN AREAS AFFECTED BY PROPOSED IMPROVEMENTS.
3. POWER, GAS, FIBER AND TELECOMMUNICATIONS SERVICES UNDER SEPARATE PERMIT.
4. REFER TO ARCHITECTURAL AND STRUCTURAL PLANS FOR FINISHED FLOOR ELEVATIONS.
5. SEE MEP PLANS FOR UTILITY POC CONTINUATION
6. SANITARY SERVICE LINES SHALL HAVE A MINIMUM 2-FEET OF COVER, UNLESS OTHERWISE NOTED.
7. DIMENSIONS SHOWN ARE TO CENTERLINE ALIGNMENT, CENTERLINE OF UTILITY LINES OR CENTER OF UTILITY STRUCTURE, UNLESS OTHERWISE NOTED.
8. SEWER PIPES SHALL BE DUCTILE IRON PIPE, CLASS 52 AND SHALL CONFORM TO NUD SEWER STANDARD SPECIFICATIONS
9. SEWER CLEANOUT PER NUD STANDARD SEWER DETAIL 9

LEGEND

- PROPERTY/ROW LINE
- PROPOSED BUILDING
- TYPE 1 CATCH BASIN
- TYPE 2 CATCH BASIN
- CLEANOUT
- STORM DRAIN LINE
- SANITARY SEWER LINE
- WATER SERVICE LINE
- FIRE SERVICE LINE
- GAS SERVICE LINE

811 Call 811 two business days before you dig

TCA
ARCHITECTURE + PLANNING + DESIGN
6211 ROOSEVELT WAY NORTHEAST
SEATTLE, WA 98115
tel: (206) 522-3830
fax: (206) 522-2456

kpff
1601 5th Avenue, Suite 1600
Seattle, WA 98101
206.622.5822
www.kpff.com

JEREMY S. FRIES — STATE OF WASHINGTON — 39847 — REGISTERED PROFESSIONAL ENGINEER

7/20/2020

BID SET

No.	Description	Date:

Project Title:

FIRE STATION 24
City of Kirkland
Kirkland, Washington

Sheet Title:

SEWER UTILITY PLAN

Scale: **AS NOTED**
Project No.: **1700011**
Date: **JULY 21, 2020**

Sheet Number:

UT3.0

Z:\1700001-1700999\1700011 (Kirkland Fire Sta 24)\CAD\Design\C2\NUD C3.0KCS-24 SWR.dwg
Jul 20, 2020 - 12:21pm teresad

Provided to Builders Exchange of WA, Inc. For usage Conditions Agreement see www.bxwa.com - Always Verify Scal

GENERAL NOTES

1. ALL WORK SHALL BE IN ACCORDANCE WITH WASHINGTON STATE DEPARTMENT OF TRANSPORTATION (WSDOT) STANDARD SPECIFICATIONS, CITY OF KIRKLAND STANDARDS, AND PROJECT SPECIFICATIONS.
2. AS A PART OF THE DESIGN PROCESS, THE ENGINEER HAS ATTEMPTED TO CONFIRM THAT THERE ARE NO CONFLICTS WITH OVERHEAD POWER LINES OR SUBSURFACE UTILITIES. HOWEVER, IT IS POSSIBLE FOR THE EXISTING OR PROPOSED CONDITIONS TO CHANGE PRIOR TO IMPLEMENTATION OF THE SCOPE OF WORK IDENTIFIED ON THESE DOCUMENTS. AS THE FIRST ORDER OF BUSINESS, THE CONTRACTOR SHALL POTHOLE EACH POLE LOCATION TO CONFIRM THAT THERE ARE NO CONFLICTS WITH SUBSURFACE UTILITIES. ADDITIONALLY, THE CONTRACTOR SHALL CONFIRM THAT THERE IS A MINIMUM 10-FOOT CLEARANCE PROVIDED BETWEEN OVERHEAD POWER LINES AND THE PROPOSED TRAFFIC SIGNAL EQUIPMENT PRIOR TO CONSTRUCTION. ADDITIONAL CLEARANCE MAY BE REQUIRED AS DIRECTED BY THE UTILITY. THE CONTRACTOR SHALL CONTACT THE ENGINEER IMMEDIATELY IF A CONFLICT IS DISCOVERED.
3. CONTRACTOR SHALL COORDINATE WITH PSE FOR CONSTRUCTION SEQUENCING. TYPE II TRAFFIC SIGNAL POLES AND MAST ARMS ON THE NORTH SIDE OF NE 132ND ST SHALL NOT BE INSTALLED UNTIL PSE HAS COMPLETED WORK ASSOCIATED WITH RELOCATION OF THE NEUTRAL WIRE.
4. THE LOCATIONS OF FEATURES SHOWN ARE APPROXIMATE AND SHALL BE VERIFIED BY THE CONTRACTOR PRIOR TO CONSTRUCTION START.
5. UTILITY LOCATIONS ARE APPROXIMATE AND SHALL BE VERIFIED IN THE FIELD BY THE CONTRACTOR PRIOR TO ANY SIGNAL WORK.
6. ALL WORK SHALL BE CONSISTENT WITH UTILITY AGENCY REQUIREMENTS. THE CONTRACTOR SHALL COORDINATE WITH AFFECTED UTILITY AGENCIES THROUGHOUT THE PROJECT. THE CONTRACTOR SHALL BE RESPONSIBLE FOR ANY DAMAGE TO UTILITIES.
7. JUNCTION BOX AND CONDUIT LOCATIONS ARE SHOWN FOR ILLUSTRATIVE PURPOSES. ACTUAL LOCATIONS SHALL BE DETERMINED BY THE CONTRACTOR IN THE FIELD. COINCIDENT CONDUITS MAY OCCUPY THE SAME TRENCH.
8. NEW VEHICLE SIGNAL HEADS SHALL BE CONVENTIONAL TYPE WITH 12IN LED LENSES, TUNNEL VISORS, AND BACKPLATES. ALL VEHICLE SIGNAL HEADS SHALL BE FACTORY PAINTED FEDERAL GREEN. ALL BACK PLATES SHALL HAVE A TWO-INCH YELLOW REFLECTIVE STRIP AROUND ITS PERIMETER. ALL VEHICLE SIGNAL HEAD MOUNTS SHALL BE TYPE M PER WSDOT STANDARD PLAN J-75.20-01.
9. NEW PEDESTRIAN SIGNAL HEADS SHALL BE COUNTDOWN TYPE LED WITH Z CRATE VISORS. HOUSING SHALL BE FACTORY PAINTED FEDERAL GREEN. ALL PEDESTRIAN SIGNAL HEAD MOUNTS SHALL BE TYPE E FOR SIDE MOUNT PER WSDOT STANDARD PLAN J-75.10-02.
10. NEW PEDESTRIAN PUSHBUTTONS SHALL BE APS TYPE POLARA NAVIGATOR OR APPROVED EQUIVALENT PER WSDOT STANDARD PLAN J-20.26-01.
11. ALL NEW SPARE/EMPTY CONDUIT SHALL CONTAIN ELECTRICALLY DETECTABLE PULL TAPE AND BE MARKED AS "CITY OF KIRKLAND" CONDUIT.
12. THE FINAL LOCATIONS OF ALL POLE FOUNDATIONS SHALL BE APPROVED BY THE ENGINEER IN THE FIELD PRIOR TO INSTALLATION.
13. ALL JUNCTION BOXES SHALL BE INSTALLED PER WSDOT STANDARD PLANS J-40.10-04 AND J-40.30-04.
14. ALL STREET NAME SIGNS SHALL BE INSTALLED PER WSDOT STANDARD PLAN G-30.10-04.
15. ALL FIBER OPTIC SWEEPS SHALL BE 3' RADIUS MINIMUM.
16. ALL 25-TA VAULTS SHALL BE INSTALLED PER CITY OF KIRKLAND STANDARD PLAN CK-TS.06.
17. COORDINATE THE CONFIGURATION OF VIDEO DETECTION ZONES IN THE FIELD WITH THE ENGINEER.
18. SPEED LIMIT OF NE 132ND STREET, IS 25 MPH.
19. PEDESTRIAN PUSHBUTTONS HAVE BEEN LOCATED TO MEET CURRENT ADA STANDARDS AND SHALL BE: ADJACENT TO A 4-FOOT BY 4-FOOT LANDING, WITHIN A 10-INCH REACH FROM THE LANDING, HAVE THE FACE OF PEDESTRIAN PUSHBUTTON ALIGNED PARALLEL WITH THE ASSOCIATED CROSSWALK, AND HAVE THE PUSHBUTTON ARROW POINTING TOWARD THE DIRECTION OF TRAVEL WITH THE ASSOCIATED CROSSWALK. THE CONTRACTOR SHALL CONFIRM PLACEMENT OF NEW PEDESTRIAN PUSHBUTTONS WITH THE ENGINEER IN THE FIELD PRIOR TO INSTALLATION.
20. A PRE-CONSTRUCTION CONFERENCE SHALL BE HELD PRIOR TO THE START OF CONSTRUCTION.
21. THE CONTRACTOR SHALL BE RESPONSIBLE FOR SECURING ALL NECESSARY PERMITS PRIOR TO CONSTRUCTION.
22. ALL WORK SHALL BE COMPLETED IN ACCORDANCE WITH WSDOT/APWA STANDARD PLANS, STANDARD SPECIFICATIONS, CITY OF KIRKLAND STANDARD, LATEST AMENDMENTS TO SPECIAL PROVISION AND THE PLANS.
23. A COPY OF THE APPROVED PLANS MUST BE ON THE JOB SITE WHENEVER CONSTRUCTION IS IN PROGRESS.
24. IT IS THE RESPONSIBILITY OF THE CONTRACTOR TO PROVIDE ADEQUATE TRAFFIC CONTROL TO ENSURE TRAFFIC SAFETY DURING CONSTRUCTION ACTIVITIES; THEREFORE, THE CONTRACTOR SHALL SUBMIT A TRAFFIC CONTROL PLAN TO THE PUBLIC WORKS DEPARTMENT PRIOR TO STARTING ANY WORK IN THE RIGHT OF WAY. ALL TRAFFIC CONTROL DEVICES SHALL CONFORM TO THE MANUAL OF UNIFORM TRAFFIC CONTROL DEVICES (MUTCD).
25. ANY EXISTING PUBLIC IMPROVEMENTS DAMAGED DURING CONSTRUCTION SHALL BE REPLACED PRIOR TO FINAL INSPECTION.
26. THE CONTRACTOR IS RESPONSIBLE FOR KEEPING ALL PUBLIC STREETS FREE OF MUD AND DEBRIS AT ALL TIMES. THE CONTRACTOR SHALL BE PREPARED TO USE POWER SWEEPERS OR OTHER PIECE OF EQUIPMENT NECESSARY TO KEEP THE ROADWAYS CLEAN.
27. EXISTING SIGNAL SYSTEM TO BE OPERATIONAL UNTIL SWITCH OVER. SEE SPECIAL PROVISIONS FOR REMOVAL INFORMATION.
28. ALL SIGNAL SYSTEM COORDINATION WITH KIRKLAND TRAFFIC SHALL BE DONE THROUGH KIRKLAND CIP REPRESENTATIVE.
29. ANY ROADWAY/INTERSECTION SIGN/MARKING REMOVED OR TEMPORARILY MOVED BY THE CONTRACTOR SHALL BE RESTORED BY THE END OF DAY AS TO COMPLY WITH THE CURRENT CITY OF KIRKLAND STANDARDS.
30. RELOCATED SIGNS SHALL BE INSTALLED ON NEW GALVANIZED PIPE PER COK PLAN NO. CK-R.43 EXCEPT BUS SIGNS.

SIGNAL HEAD DISPLAYS

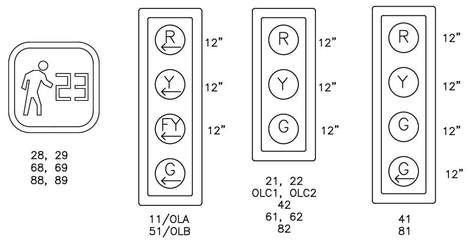

PRE-EMPTION SCHEDULE

CIRCUIT	PHASE(S)
A	ø2/ø5/OLC
B	ø4
C	ø1/ø6
D	ø8
E	ø2/ø5*

*PRE-EMPTION CIRCUIT E INITIATES THE FIRE STATION PRE-EMPT PHASING

SERVICE CABINET BREAKER SCHEDULE

SERVICE & CIRCUITS	VOLTAGE	LOAD (WATTS)	MAIN BREAKER AMPS	BRANCH BREAKER AMPS	CONTACTOR AMPS
SERVICE	120/240	5843	200		
SIGNAL	120	2730		50	
ILLUMINATION	240	2316		30	30

SIGN SCHEDULE

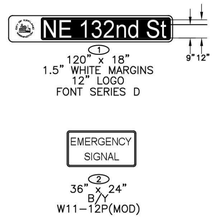

LEGEND

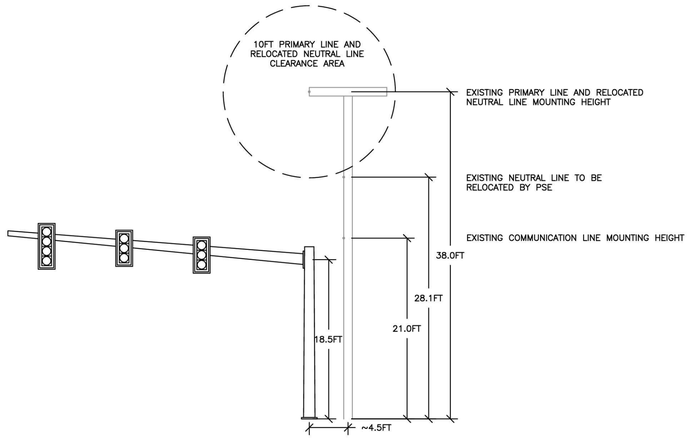

TRAFFIC SIGNAL POLE 3 – LOOKING WEST

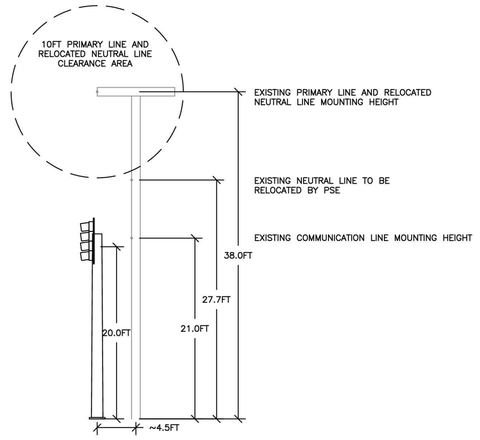

TRAFFIC SIGNAL POLE 5 – LOOKING WEST

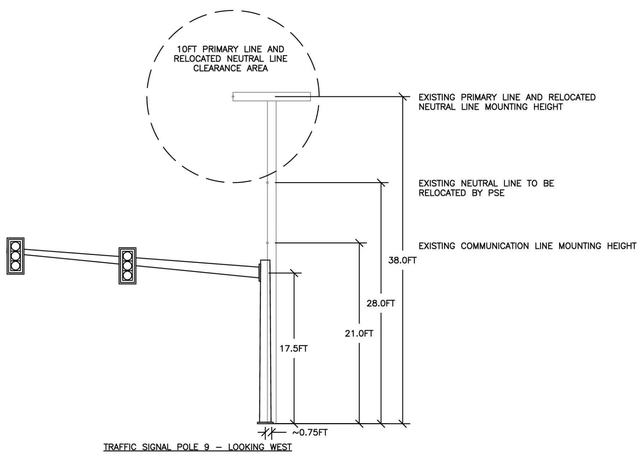

TRAFFIC SIGNAL POLE 9 – LOOKING WEST

LIGHT LEVELS*

CALCULATION AREA	AVERAGE MAINTAINED ILLUMINANCE (FC)		AVERAGE TO MINIMUM UNIFORMITY RATIO	
	TARGET	CALCULATED	TARGET	CALCULATED
INT – NE 132ND ST	1.90	2.05	3:1	2.56
RD – NE 132ND ST (EAST OF INTERSECTION)	1.20	1.33	3:1	2.66
RD – NE 132ND ST (WEST OF INTERSECTION)	1.20	2.00	3:1	2.00

*PER RP-8-18

transpogroup
WHAT TRANSPORTATION CAN BE.
12131 113TH AVENUE NE, SUITE 203 (TEL) 425 821-3665
KIRKLAND, WASHINGTON 98034 (FAX) 425 825-8434

JENNIFER J. AITCHISON — STATE OF WASHINGTON — 51486 — REGISTERED PROFESSIONAL ENGINEER

07/20/2020

BID SET

No.	Description	Date:

Project Title:

Fire Station 24

City of Kirkland
Kirkland, Washington

Sheet Title:

TRAFFIC SIGNAL NOTES AND LEGEND

Scale:

Project No. : 16-46

Date : July 20, 2020

Sheet Number :

TS01

W:\KFL\116544.00 - Kirkland Fire Station #24\Engineering\CAD\Sheets\Kirkland Fire Station 24 Signal Plan.dwg(TS1)-Bobby Miller 7/20/2020 3:49 PM

Provided to Builders Exchange of WA, Inc. For usage Conditions Agreement see www.bxwa.com - Always Verify Scal

CONSTRUCTION NOTES

1. REMOVE EXISTING TYPE II SIGNAL POLE, FOUNDATION AND CONDUIT UPSWEEPS, AND ALL ASSOCIATED EQUIPMENT. BACKFILL AND COMPACT VOID TO MATCH SURROUNDING AREA.
2. INSTALL TYPE PS SIGNAL POLE AND CURB BASE FOUNDATION PER WSDOT STANDARD PLANS J-20.11-03, J-20.16-02, AND J-20.20-02. INSTALL ONE PEDESTRIAN SIGNAL HEAD WITH TYPE D MOUNT, AND ONE APS PEDESTRIAN PUSHBUTTON ASSEMBLY WITH AUDIBLE SPEECH MESSAGE ON SIGNAL POLE.
3. INSTALL TYPE II SIGNAL POLE WITH 35FT MAST ARM AND FOUNDATION PER WSDOT STANDARD PLAN J-26.10-03 AND SHEET TS05. INSTALL THREE VEHICLE SIGNAL HEADS, ONE EMERGENCY VEHICLE PREEMPTION DETECTOR, ONE VIDEO DETECTION CAMERA, ONE CCTV CAMERA, AND ONE STREET NAME SIGN ON MAST ARM. INSTALL ONE PEDESTRIAN SIGNAL HEAD WITH TYPE E MOUNT, ONE TERMINAL CABINET, AND ONE APS PEDESTRIAN PUSHBUTTON ASSEMBLY WITH AUDIBLE SPEECH MESSAGE AND POLARA EZ523-6 MOUNTING EXTENDER ON SIGNAL POLE.
4. INSTALL TYPE PS SIGNAL POLE AND FOUNDATION PER WSDOT STANDARD PLANS J-20.16-02, J-20.20-02, AND J-21.10-04. INSTALL ONE PEDESTRIAN SIGNAL HEAD WITH TYPE D MOUNT, AND ONE APS PEDESTRIAN PUSHBUTTON ASSEMBLY ON SIGNAL POLE.
5. INSTALL TYPE II SIGNAL POLE WITH 25FT MAST ARM AND FOUNDATION PER WSDOT STANDARD PLAN J-26.10-03 AND SHEET TS05. INSTALL TWO VEHICLE SIGNAL HEADS, ONE EMERGENCY VEHICLE PREEMPTION DETECTOR, ONE VIDEO DETECTION CAMERA, AND ONE STREET NAME SIGN ON MAST ARM. INSTALL ONE TERMINAL CABINET ON SIGNAL POLE.
6. INSTALL TYPE III SIGNAL POLE WITH 35FT MAST ARM AND FOUNDATION PER WSDOT STANDARD PLAN J-26.10-03 AND SHEET TS05. INSTALL THREE VEHICLE SIGNAL HEADS, ONE EMERGENCY VEHICLE PREEMPTION DETECTOR, AND ONE VIDEO DETECTION CAMERA ON MAST ARM. INSTALL ONE PEDESTRIAN SIGNAL HEAD WITH TYPE E MOUNT, ONE APS PEDESTRIAN PUSHBUTTON ASSEMBLY, AND ONE TERMINAL CABINET ON SIGNAL POLE. INSTALL ONE LEOTEK 130W LED (GC2-96G-MV-NW-3R-GY-450S-4B) LUMINAIRE ON A 10FT DAVIT ARM AT 40FT MOUNTING HEIGHT.
7. INSTALL TYPE III SIGNAL POLE WITH 30FT MAST ARM AND FOUNDATION PER WSDOT STANDARD PLAN J-26.10-03 AND SHEET TS05. INSTALL TWO VEHICLE SIGNAL HEADS, ONE EMERGENCY VEHICLE PREEMPTION DETECTOR, ONE VIDEO DETECTION CAMERA, AND ONE STREET NAME SIGN ON MAST ARM. INSTALL TWO PEDESTRIAN SIGNAL HEADS WITH TYPE E MOUNTS, TWO APS PEDESTRIAN PUSHBUTTON ASSEMBLIES WITH AUDIBLE SPEECH MESSAGES, AND ONE TERMINAL CABINET ON SIGNAL POLE. INSTALL ONE LEOTEK 130W LED (GC2-96G-MV-NW-3R-GY-450S-4B) LUMINAIRE ON A 10FT DAVIT ARM AT 40FT MOUNTING HEIGHT.
8. REMOVE EXISTING TYPE III SIGNAL POLE, FOUNDATION CONDUIT UPSWEEPS, AND ALL ASSOCIATED EQUIPMENT. BACKFILL AND COMPACT VOID TO MATCH SURROUNDING AREA.
9. INSTALL TYPE II SIGNAL POLE WITH 30FT MAST ARM AND FOUNDATION PER WSDOT STANDARD PLAN J-26.10-03 AND SHEET TS05. INSTALL TWO VEHICLE SIGNAL HEADS, ONE EMERGENCY PREEMPTION DETECTOR, AND ONE WARNING SIGN ON MAST ARM. INSTALL ONE TERMINAL CABINET ON SIGNAL POLE.
10. INSTALL ONE EVP DETECTOR ON EXISTING LIGHT POLE. ROUTE NEW CONDUCTORS THROUGH EXISTING CONDUITS TO PROPOSED SIGNAL CABINET. REMOVE AND REPLACE EXISTING LUMINAIRE WITH LEOTEK 130W LED (GC2-96G-MV-NW-3R-GY-450S).
11. COORDINATE WITH PSE TO REMOVE EXISTING LUMINAIRE AND SECONDARY WIRE.
12. REMOVE AND REPLACE EXISTING LUMINAIRE WITH LEOTEK 130W LED (GC2-96G-MV-NW-3R-GY-450S).
13. INSTALL POLE, LUMINAIRE ARM, AND FOUNDATION PER CITY OF KIRKLAND STANDARD PLAN CK-TS.08. INSTALL 89W LEOTEK LED LUMINAIRE FIXTURE (GCM2-60J-MV-40K-3R-GY-140S-4B) ON 10FT LUMINAIRE ARM AT 25FT MOUNTING HEIGHT AT STA 11+07.3, 30.5FT RT.
14. ROUTE NEW CONDUIT INTO EXISTING JUNCTION BOX AND SPLICE EXISTING LUMINAIRE CONDUCTORS TO PROPOSED ILLUMINATION CIRCUIT.
15. REMOVE EXISTING JUNCTION BOX AND CONDUIT SWEEPS. BACKFILL AND COMPACT VOID TO MATCH SURROUNDING AREA.
16. INTERCEPT EXISTING CONDUIT, REROUTE EXISTING CONDUCTORS INTO PROPOSED JUNCTION BOX, AND SPLICE EXISTING ILLUMINATION CONDUCTORS INTO PROPOSED ILLUMINATION CIRCUIT.
17. CONSTRUCT COMBINATION TRAFFIC CONTROLLER/ELECTRICAL SERVICE CABINETS FOUNDATION PER CITY OF KIRKLAND STANDARD PLAN CK-TS.04. INSTALL NEW FULLY EQUIPPED TYPE STRETCH "P" CABINET, TRAFFIC SIGNAL CONTROLLER, ALL ASSOCIATED EQUIPMENT AND CONNECT ALL FIELD WIRING. COORDINATE DELIVERY, TESTING, AND INSTALLATION WITH THE CITY OF KIRKLAND TRAFFIC MAINTENANCE CENTER REPRESENTATIVE. SEE SPECIAL PROVISIONS FOR TRAFFIC SIGNAL CABINET EQUIPMENT LIST. COORDINATE CABINET ORIENTATION WITH THE CITY OF KIRKLAND TRAFFIC MAINTENANCE CENTER PRIOR TO CONSTRUCTION.
18. INSTALL ELECTRICAL SERVICE CABINET PER CITY OF KIRKLAND STANDARD PLANS CK-TS.05A, CK-TS.05B, AND CK-TS.05C. CONTRACTOR SHALL VERIFY WITH PUGET SOUND ENERGY THAT CABINET IS COMPLIANT PRIOR TO INSTALLATION. PHOTOELECTRIC CONTROL SHALL BE INSTALLED ON TOP OF SERVICE CABINET.
19. SEE UTILITY PLAN FOR FIBER OPTIC CONNECTION TO NE 132ND ST & 100TH AVE NE TRAFFIC SIGNAL CONTROLLER CABINET.
20. INSTALL TYPE 3A INDUCTION LOOP PER WSDOT STANDARD PLANS J-50.05-00, J-50.12-02, AND J-50.15.01.
21. COORDINATE POWER SUPPLY WITH PUGET SOUND ENERGY

NOTES

1. SEE SHEET TS01 FOR GENERAL NOTES, LEGEND, SIGN SCHEDULE, PRE-EMPTION SCHEDULE, AND SIGNAL HEAD DISPLAYS

WIRING SCHEDULE

NO	RACEWAY CONDUIT SIZE*	VEH DETECT 2C(SH)		E/V DETECT 3C(SH)		PPB 2C(SH)		VIDEO DETECT CABLE		CCTV CAT6		VEH/PED HEAD 5C		VEH HEAD 7C		ILLUM #8		SIGNAL POWER #6		CONDUIT FILL %	REMARKS
		EX.	NEW	EX.	NEW	EX.	NEW	EX.	NEW	EX.	NEW	EX.	NEW	EX.	NEW	EX.	NEW	EX.	NEW		
1	2" SCH40																		3	8.4%	
2	2" SCH40																2			5.1%	
3	2" SCH80																2			5.8%	
4	2" SCH40															2				5.1%	RE-ROUTE EX. CONDUCTORS TO NEW JUNCTION BOX
5	2" EX				1											2(R)	2			7.2%	REMOVE AND REPLACE EXISTING ILLUMINATION CONDUCTORS
6	4" SCH40	SPARE (FOR FUTURE FIBER CONNECTION BY THE CITY)																			
	4" SCH40	SPARE (FOR FUTURE FIBER CONNECTION BY THE CITY)																			
7	3" SCH40												5		1					12.7%	
	3" SCH40		3		2		3		2		1									14.4%	
8	2" SCH40						1						1							11.4%	
9	2" SCH40				1		1		1		1		2		1					23.1%	
	2" SCH40	SPARE (EMPTY WITH PULL ROPE)																			
10	3" SCH80		5		2		1		1				3							22.0%	
	2" SCH80	SPARE (EMPTY WITH PULL ROPE)																			
11	2" SCH40						1						1							8.7%	
12	2" SCH40				1								1							12.0%	
	2" SCH40	SPARE (EMPTY WITH PULL ROPE)																			
13	2" SCH40				1												2			7.2%	
14	3" SCH80												5		1					14.4%	
	3" SCH80		3		2		3		2											15.4%	
	2" SCH80	SPARE (EMPTY WITH PULL ROPE)																			
	2" SCH80	SPARE (EMPTY WITH PULL ROPE)																			
15	3" SCH40				1		2		1				3							11.8%	
	2" SCH40	SPARE (EMPTY WITH PULL ROPE)																			
16	3" SCH80				1		1		1				2		1					12.3%	
	2" SCH80	SPARE (EMPTY WITH PULL ROPE)																			
	2" SCH80	SPARE (EMPTY WITH PULL ROPE)																			
17	2" SCH40				1		1		1				2		1					24.2%	
	2" SCH40	SPARE (EMPTY WITH PULL ROPE)																			
18	2" SCH40																2			5.1%	
19	2" SCH40		2																	7.2%	
20	2" SCH80		2		1								1							20.0%	
	2" SCH80	SPARE (EMPTY WITH PULL ROPE)																			
21	2" SCH40		5		1								1							25.7%	
	2" SCH40	SPARE (EMPTY WITH PULL ROPE)																			
22	3" SCH40												5		1					12.7%	
	3" SCH40		3		3		3		2		1									15.4%	
	2" SCH40	SPARE (EMPTY WITH PULL ROPE)																			
	2" SCH40	SPARE (EMPTY WITH PULL ROPE)																			
23	2" SCH40				1															3.8%	
24	2" SCH80				1												2			8.3%	
25	3" SCH40												6		1					14.7%	
	3" SCH40		5		3		3		2		1									19.7%	
26	3" SCH40												6		1					14.7%	
	3" SCH40		5		3		3		2		1									19.7%	
	2" SCH40	SPARE (EMPTY WITH PULL ROPE)																			
	2" SCH40	SPARE (EMPTY WITH PULL ROPE)																			
27	2" SCH40		3																	9.9%	

*ALL NEW CONDUIT SHALL BE PVC AND SHALL CONTAIN A GROUND WIRE EQUAL IN SIZE TO THE LARGEST CONDUCTOR (NO. 8 MINIMUM), UNLESS OTHERWISE STATED.

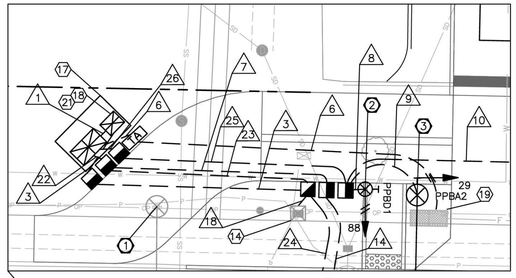

INSET SCALE: 1"=10'

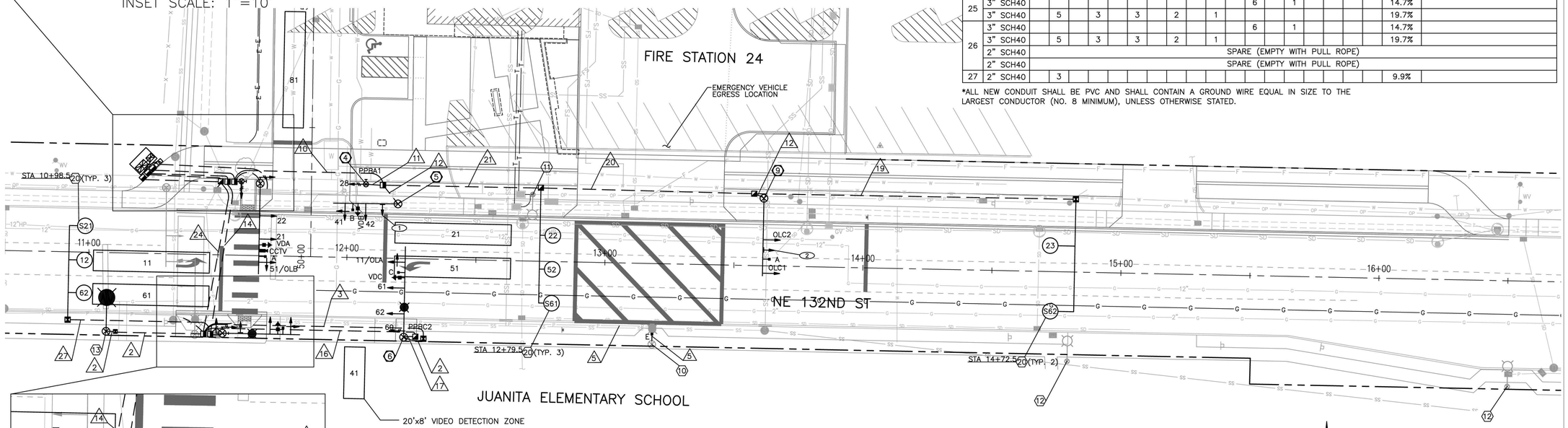

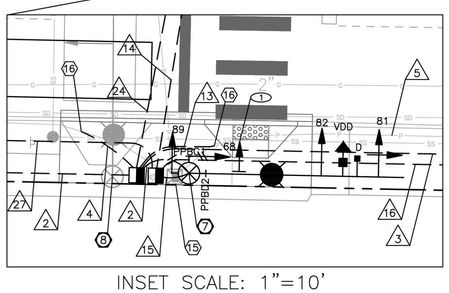

INSET SCALE: 1"=10'

PROPOSED PHASE SEQUENCE DIAGRAM

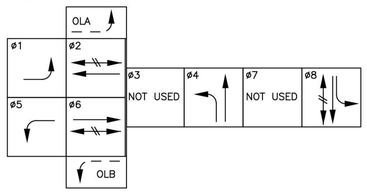

PHASING NOTES:

1. PHASES ø4 AND ø8 ARE SPLIT PHASE.
2. OLC REMAINS GREEN UNTIL FIRE STATION EMERGENCY PRE-EMPT PHASING (SHOWN ON TS04) IS ACTIVATED.

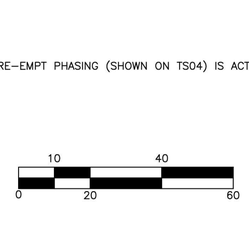

transpogroup
WHAT TRANSPORTATION CAN BE.
12131 113TH AVENUE NE, SUITE 203
KIRKLAND, WASHINGTON 98034
(TEL) 425 821-3665
(FAX) 425 825-8434

07/20/2020

BID SET

No.	Description	Date:

Project Title:

Fire Station 24

City of Kirkland
Kirkland, Washington

Sheet Title:

TRAFFIC SIGNAL PLAN

Scale:
Project No. : 16-46
Date : July 20, 2020

Sheet Number :

TS02

Provided to Builders Exchange of WA, Inc. For usage Conditions Agreement see www.bxwa.com - Always Verify Scal

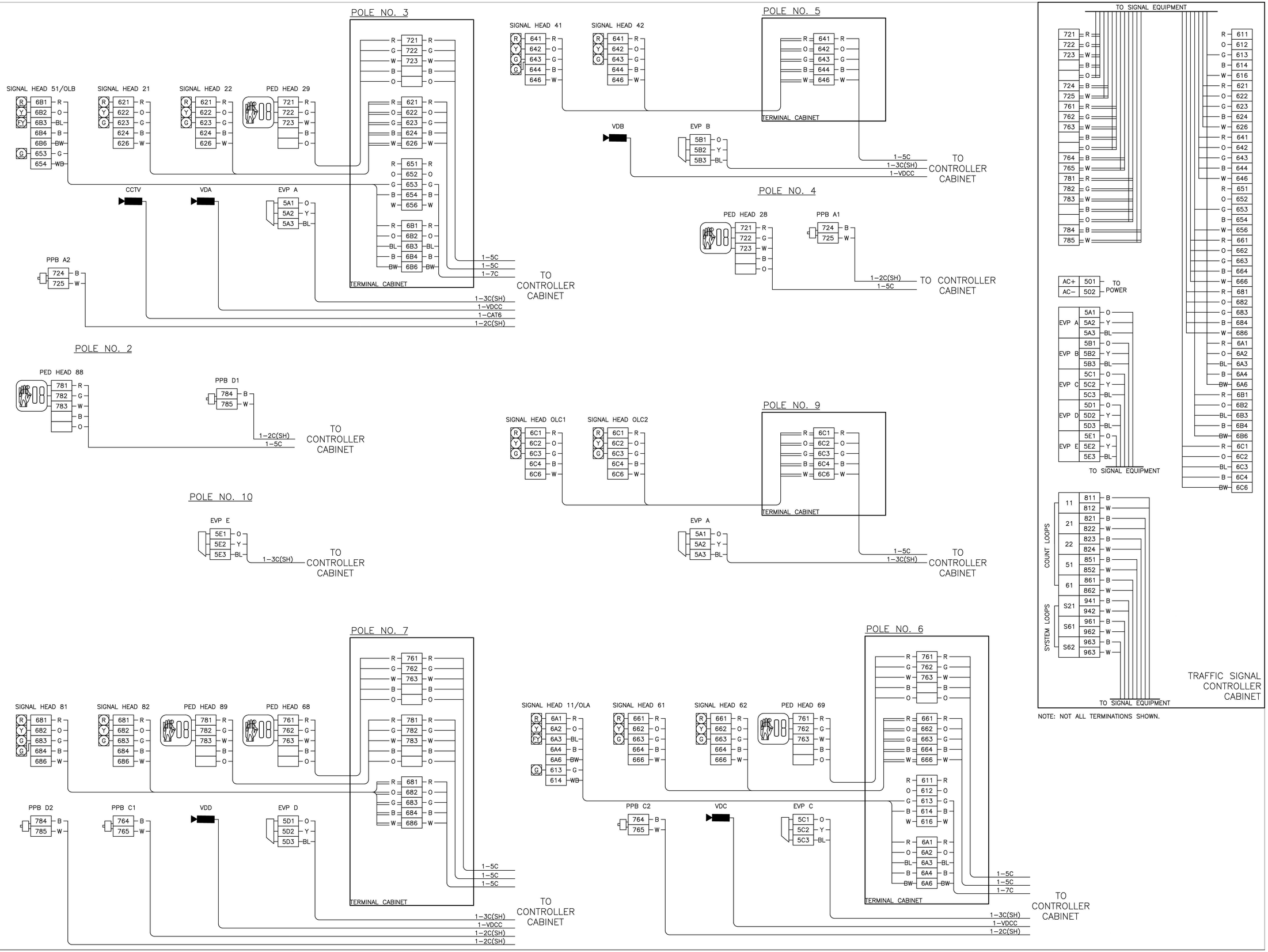

NOTE: NOT ALL TERMINATIONS SHOWN.

transpogroup
WHAT TRANSPORTATION CAN BE.
12131 113TH AVENUE NE, SUITE 203
KIRKLAND, WASHINGTON 98034
(TEL) 425 821-3665
(FAX) 425 825-8434

JENNIFER TAITOONG ANDERSON — STATE OF WASHINGTON — 51486 — REGISTERED PROFESSIONAL ENGINEER
07/20/2020

BID SET

No.	Description	Date:

Project Title:

Fire Station 24

City of Kirkland
Kirkland, Washington

Sheet Title:

TRAFFIC SIGNAL FIELD WIRE TERMINATIONS

Scale:
Project No.: 16-46
Date: July 20, 2020

Sheet Number:

TS03

M:\(1).1-16\4.0 - Kirkland Fire Station 24\Engineering\CAD\Sheets\Kirkland Fire Station 24 Signal Plans.dwg(TS03)Bobby Miller 7/20/2020 3:49 PM

Provided to Builders Exchange of WA, Inc. For usage Conditions Agreement see www.bxwa.com - Always Verify Scal

FIRE STATION PRE-EMPT PHASING

EVP A

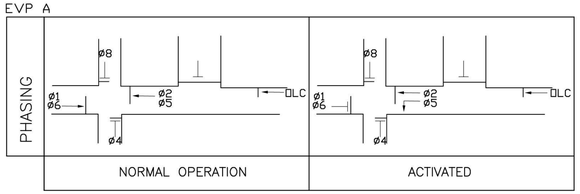

EVP B

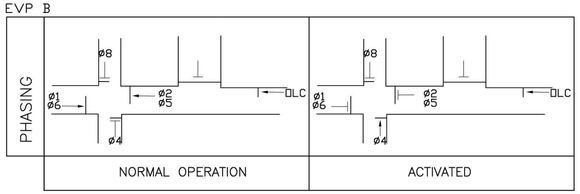

EVP C

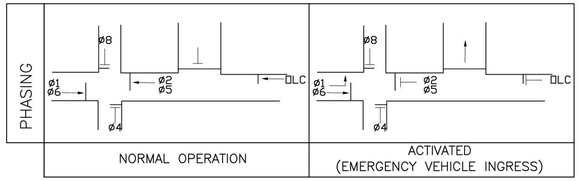

EVP D

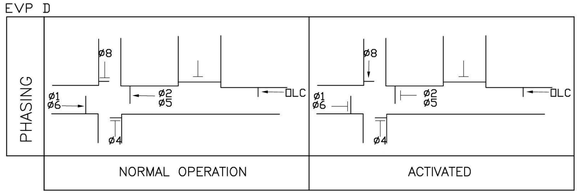

EVP E

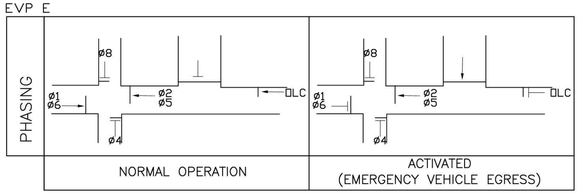

NOTES:

NORMAL OPERATION SHOWN AS PHASES 2 AND 6 BEING GREEN, FOR PURPOSES OF CLARITY.

LEGEND

PROTECTED MOVEMENT ←

PROHIBITED MOVEMENT ⊢

VIDEO DETECTION CAMERA NOTES:

1. THE CONTRACTOR SHALL DRILL A 1" HOLE IN THE BACK SIDE OF THE SIGNAL MAST ARM. TAP HOLE AND INSTALL GALVANIZED STRAIN RELIEF FITTING. VERIFY MOUNTING LOCATION WITH ENGINEER PRIOR TO DRILLING.
2. INSTALL THE PELCO PRODUCT INC. ASTRO BRACKET OVER THE 1" HOLE.
3. PULL VIDEO CABLE THROUGH THE SIGNAL MAST ARM, THROUGH THE 1" HOLE, AND THROUGH THE GUSSETED 1.5" ALUMINUM TUBE.
4. BOLT THE 1.5" GUSSETED TUBE TO THE ASTRO BRACKET.
5. ATTACH VIDEO CAMERA MOUNTING BRACKET TO THE TOP OF THE GUSSETED TUBE.
6. ROUTE VIDEO CABLE IN GUSSET TO THE INSIDE OF TUBE, UP THE TUBE, EXITING AT TOP OF GUSSET, AND CONNECT TO VIDEO SPLICE ENCLOSURE (SEE DETAIL THIS SHEET) LEAVING A 6 TO 8 INCH DRIP LOOP IN CABLE.
7. INSTALL VINYL INSERT IN GUSSET, LEAVING NO MORE THAN A 1" GAP AT THE TOP FOR CABLE TO EXIT THE TUBE.
8. INSTALL TWO BLACK WEATHER RATED WIRE TIES AROUND TUBE WHERE CABLES EXIT AT THE TOP OF THE VINYL INSERT.
9. CONTRACTOR TO DETERMINE CABLE LENGTH FOR MOUNTING BRACKET.
10. ADJUST CAMERA ROTATION IN HOUSING TO PROVIDE LEVEL MONITOR PICTURE.

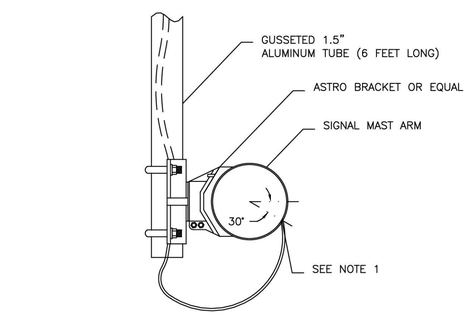

VIDEO DETECTION CAMERA - SIGNAL MAST ARM INSTALLATION DETAILS
(N.T.S.)

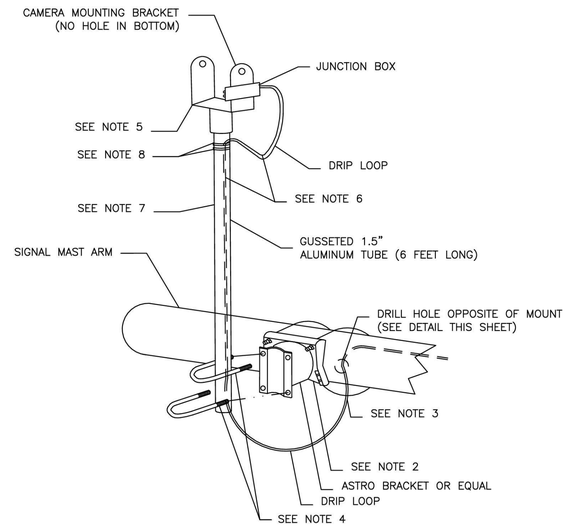

VIDEO DETECTION CAMERA - SIGNAL MAST ARM MOUNT DETAILS
(N.T.S.)

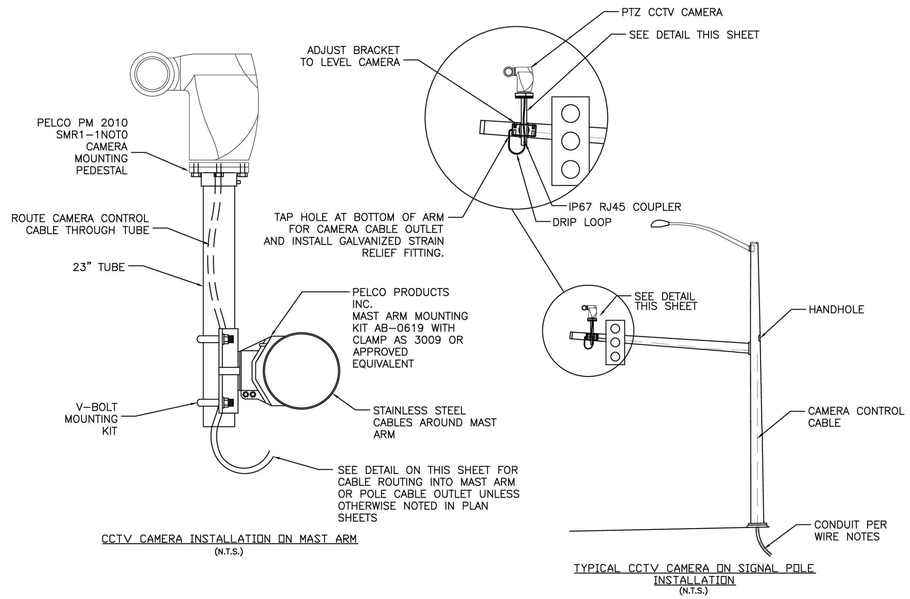

CCTV CAMERA INSTALLATION ON MAST ARM
(N.T.S.)

TYPICAL CCTV CAMERA ON SIGNAL POLE INSTALLATION
(N.T.S.)

transpogroup
WHAT TRANSPORTATION CAN BE.
12131 113TH AVENUE NE, SUITE 203 (TEL) 425 821-3665
KIRKLAND, WASHINGTON 98034 (FAX) 425 825-8434

HEATHER T. AITCHISON
STATE OF WASHINGTON
51486
REGISTERED
PROFESSIONAL ENGINEER
07/20/2020

BID SET

No.	Description	Date:

Project Title:

Fire Station 24

City of Kirkland
Kirkland, Washington

Sheet Title:

TRAFFIC SIGNAL DETAILS

Scale:

Project No. : **16-46**

Date : **July 20, 2020**

Sheet Number :

TS04

Provided to Builders Exchange of WA, Inc. For usage Conditions Agreement see www.bxwa.com - Always Verify Scal

LEGEND

a.	VEHICLE DISPLAY	g.	PEDESTRIAN DISPLAY
b.	MAST ARM MTD. SIGN	h.	TERMINAL CABINET
c.	STREET NAME SIGN	i.	APS PPB-M
d.	PRE-EMPT DETECTOR	j.	HANDHOLE
e.	POST MTD. SIGN	k.	VIDEO DETECTION
f.	LUMINAIRE	l.	CCTV CAMERA

SIGNAL STANDARD IDENTIFICATION TAG DETAIL

STD. NO. XX	SIGNAL STANDARD NO.	STD. NO. 02
XX RD & XX ST	INTERSECTION NAME	NE 132ND ST AND FIRE STATION 24
MANUFACTURER		MANUFACTURER
APPROVED DWG. XXXXXX	APPROVED DRAWING NO.	APPROVED DWG. AB12345
FAB. X/XX/XXXX	FABRICATION DATE	FAB. 6/14/2002

EXAMPLE

TAG NOTES:
CORROSION RESISTANT METAL TAG SECURED WITH (2) 0.125" RIVETS AS FOLLOWS:
- POLE SHAFT - LOCATED WITHIN 6" ABOVE HAND HOLE (TYPE II & III).
- SIGNAL AND LUMINAIRE MAST ARM (TYPE II & III) - LOCATED WITHIN 6" OF THE LUMINAIRE ARM AND THE POLE SHAFT CONNECTION POINT (TYPE III).

TEXT SHALL BE A MINIMUM OF 3/16" HIGH, STAMPED OR EMBOSSED.

MEASURE ATTACHMENT POINT ANGLES CLOCKWISE FROM POLE ORIENTATION LINE (E1 ATTACHMENT POINT) TO THE ATTACHMENT POINT LOCATION

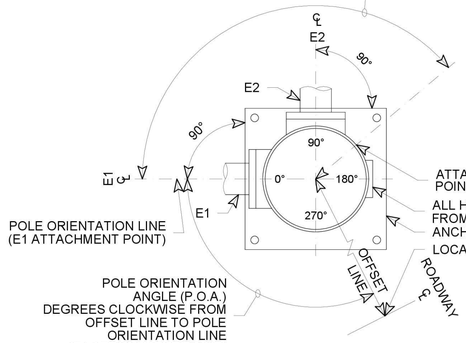

POLE ORIENTATION AND ATTACHMENT POINT DETAIL

LUMINAIRE MAST ARM X Y Z (ft^3)	
MAST ARM LENGTH	X Y Z (ft^3)
6'	19.8
8'	26.4
10'	33.0
12'	39.6
14'	46.2
16'	52.8

STANDARD TYPE		STANDARD PLAN REFERENCES			
		POLE	FOUNDATION	CURB	ELECTRICAL
			STANDARD		
PPB	FIXED	J-20.10	J-20.10	J-20.11	J-20.10
PPB	BREAKAWAY	J-20.15	J-20.15	J-20.11	J-20.15
PS		J-20.16	J-21.10	J-20.11	J-20.20
I		J-21.15	J-21.10	J-20.11	J-21.20
II, III, SD		N/A	J-26.10, J-26.15	N/A	N/A

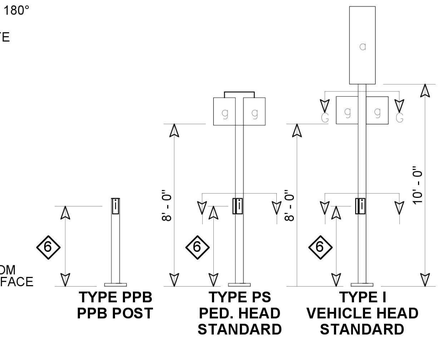

6 3' - 6" MEASURED FROM SIDEWALK SURFACE TO CENTER OF PEDESTRIAN PUSH BUTTON

TYPE PPB PPB POST

TYPE PS PED. HEAD STANDARD

TYPE I VEHICLE HEAD STANDARD

NOTES

1. MOUNTING COUPLING INSTALLED AT OFFSET DISTANCE INDICATED IN CHART. FOR TYPE N MOUNTS ONLY, DRILL 1" DIA. HOLE IN MAST ARM AND INSTALL PLASTIC SPLIT BUSHING FOR CABLE ENTRANCE.
2. FIELD INSTALLED. SIGN SIZES SHALL NOT EXCEED THE MAXIMUM VALUES LISTED HERE:

SIGN	HEIGHT	WIDTH	AREA
b	3.0 FT	N/A	7.5 SQ. FT.
c	3.0 FT	N/A	36.0 SQ. FT.
e	N/A	3.0 FT	15.0 SQ. FT.

3 1' - 0" MIN. TO 2' - 6" MAX. FROM POLE CENTERLINE TO SIGN EDGE

4 FOR POST MOUNTED SIGNS THERE SHALL BE 2' - 0" MIN. FROM THE FACE OF THE CURB OR THE EDGE OF THE SHOULDER TO THE EDGE OF THE SIGN

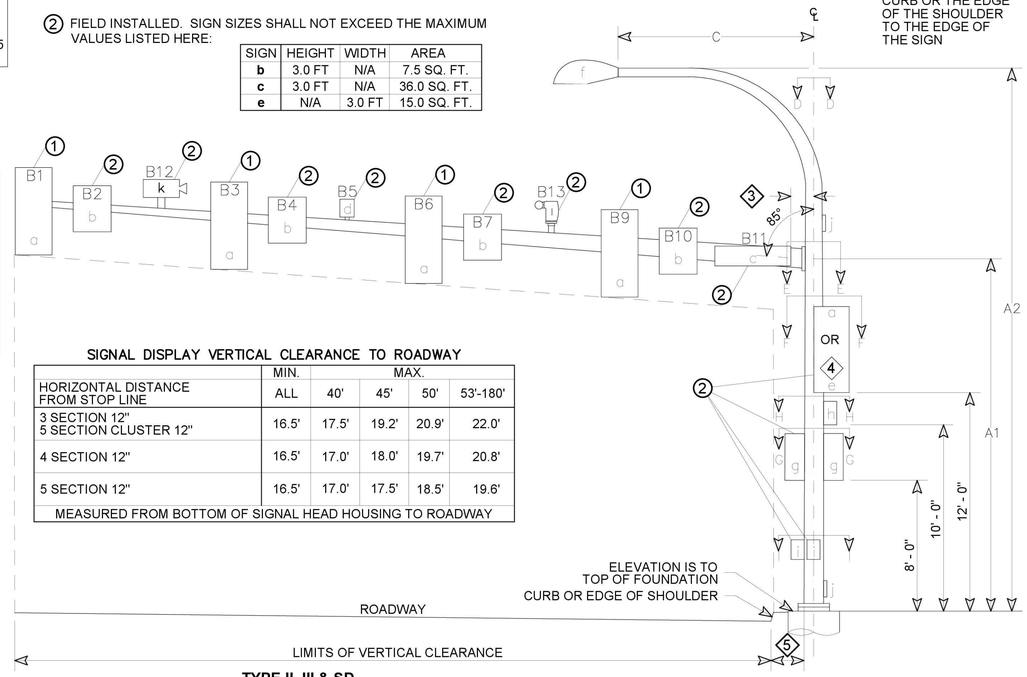

SIGNAL DISPLAY VERTICAL CLEARANCE TO ROADWAY

	MIN.	MAX.			
HORIZONTAL DISTANCE FROM STOP LINE	ALL	40'	45'	50'	53'-180'
3 SECTION 12" 5 SECTION CLUSTER 12"	16.5'	17.5'	19.2'	20.9'	22.0'
4 SECTION 12"	16.5'	17.0'	18.0'	19.7'	20.8'
5 SECTION 12"	16.5'	17.0'	17.5'	18.5'	19.6'

MEASURED FROM BOTTOM OF SIGNAL HEAD HOUSING TO ROADWAY

TYPE II, III & SD SIGNAL STANDARD

7 DMS OR VMS IS NOT ALLOWED ON THESE POLES.

5 PLACEMENT SHALL BE 2' - 0" MIN. FROM FACE OF CURB OR EDGE OF SHOULDER; 3' - 0" MIN. FROM FACE OF GUARDRAIL; 4' - 0" MIN. FROM CONC. BARRIER TYPE 2 (MEASURED FROM A POINT WHERE THE BARRIER BASE MEETS THE SHOULDER SURFACE (TOE). MEASUREMENT TAKEN FROM TRAFFIC SIDE OF BARRIER; TO FACE OF POLE)

NOTE:

TYPE E MOUNTS SHALL BE USED FOR PEDESTRIAN DISPLAYS ON TYPE II OR III SIGNAL STANDARDS, WITH THE FOLLOWING EXCEPTION: PEDESTRIAN DISPLAYS MOUNTED ON OCTAGONAL (8 SIDED) SIGNAL STANDARDS AT AN ANGLE OTHER THAN A 45 DEGREE INCREMENT SHALL USE A TYPE A MOUNT FOR TWO PEDESTRIAN DISPLAYS, OR A TYPE B MOUNT FOR A SINGLE PEDESTRIAN DISPLAY.

SIGNAL STANDARD DETAIL CHART

STD. No.	CENTERLINE STATIONING	FIELD LOCATION						POLE TYPE	MOUNTING HEIGHT (FT)	SIGNAL MAST ARM DATA																					LUMINAIRE ARM (FT)	CALCULATED POLE XZY(FT^3)[X][Y]	POLE ATTACHMENT POINT ANGLES (deg.)									FOUNDATION DESIGN XYZ(FT^3)	FOUNDATION DEPTH (FT) ***			REMARKS
										OFFSET DISTANCES (FT) (Z) (POLE ℄ TO ATTACHMENT POINT)											WINDLOAD AREAS ($FT)^2$ (X)(Y)																								ALTERNATE 1			
		STATION	OFFSET (FT)	LT.	RT.	ELEV. (FT)	P.O.A		A1	A2	B1	B2	B3	B4	B5	B6	B7	B8	B9	B10	B11	B12	B13	B1	B2	B3	B4	B5	B6	B7	B8	B9	B10	B11	C	**	D	E1	E2	F1	G1	G2	H	I1	I2		3' RD.	3' SQ.	4' RD.	
1	NE 132ND ST	EX						II																																								REMOVE EXISTING POLE
2	NE 132ND ST	11+58.6	28.6FT	X		*		PS																																0		270						
3	NE 132ND ST	11+65.9	27.9FT	X		*	0	II	18.5		30.5		21.5		28.5	12.5						23.5	26.0	11.6		9.2			9.2									667		0		180		180		180	900	10	8	8	
4	NE 132ND ST	12+06.8	28.5FT	X		*		PS																																90			180						
5	NE 132ND ST	12+19.4	21.1FT	X		*	90	II	20.0		20.5		12.5		17.5						6.0	15.5		11.6		9.2										15		443		0				180			700	10	8	8	
6	NE 132ND ST	12+22.6	30.4FT		X	*	0	III	19.0	35.0	29.0		19.0		25.0	9.0						23.0		11.6		9.2			9.2							10.0	627	0	0			0		90	0		700	10	8	8	
7	NE 132ND ST	11+52.3	30.3FT		X	*	90	III	18.0	35.0	26.5		18.5		23.5						7.0	21.5		11.6		9.2										15	10.0	616	0	0			180	270	180	0	270	700	10	8	8	
8	NE 132ND ST	EX																																														REMOVE EXISTING POLE
9	NE 132ND ST	13+61.1	26.1FT	X		*	0	II	17.5		29.0		16.0	20.0	23.5									9.2		9.2	6.0										534							180			700	10	8	8	
10	NE 132ND ST	EX																																														EX. POLE TO REMAIN

* ELEVATION SHALL MATCH TOP OF SIDEWALK, CURB RAMP, OR CURB AS DETERMINED BY THE ENGINEER. ELEVATION IS TO TOP OF FOUNDATION. FIELD VERIFY ELEVATION PRIOR TO ORDERING SIGNAL STANDARDS.
* CALCULATED POLE X Y Z (FT^3) IS THE SUM OF THE TOTAL X Y Z (FT^3) FOR THE SIGNAL MAST ARM AND THE X Y Z(FT^3) FOR THE LUMINAIRE ARM (IF PRESENT).
* FOUNDATION DEPTH IS BASED ON AN ASSUMED LATERAL BEARING PRESSURE OF 1,000 PSF, A GROUND SLOPE OF 3H:1V OR FLATTER, AND A DRILLED SHAFT–TYPE CONSTRUCTION. CONTRACTOR SHALL VERIFY LATERAL BEARING PRESSURE AND GROUND SLOPE PRIOR TO EXCAVATION.

transpogroup
WHAT TRANSPORTATION CAN BE.
12131 113TH AVENUE NE, SUITE 203 (TEL) 425 821-3665
KIRKLAND, WASHINGTON 98034 (FAX) 425 825-8434

JENNIFER TAITOOSHI — STATE OF WASHINGTON — 51436 — REGISTERED PROFESSIONAL ENGINEER

07/20/2020

BID SET

No.	Description	Date:

Project Title:

Fire Station 24
City of Kirkland
Kirkland, Washington

Sheet Title:

TRAFFIC SIGNAL POLE CHART

Scale:
Project No. : 16-46
Date : July 20, 2020

Sheet Number :

TS05

W:\KR\1185410 - Kirkland Fire Station #24\Engineering\CAD\Sheets\Kirkland Fire Station 24 Signal Plans.dwg/TS05/Bobby Miller 7/20/2020 3:49 PM

Provided to Builders Exchange of WA, Inc. For usage Conditions Agreement see www.bxwa.com - Always Verify Scal

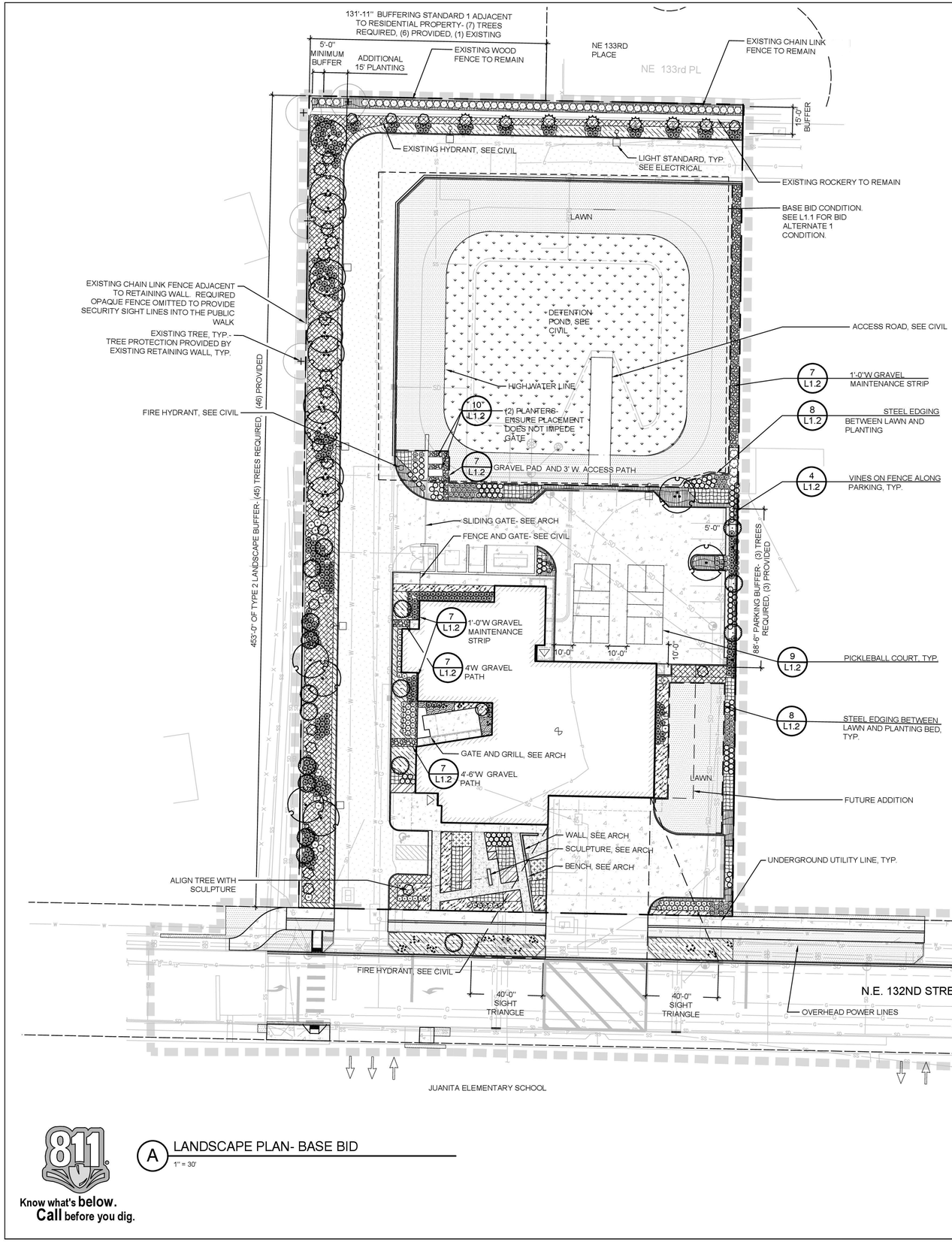

A LANDSCAPE PLAN- BASE BID

1" = 30'

GRAPHIC SCALE

0 15 30 60 FEET

1" = 30 FEET

811 Know what's below. Call before you dig.

LEGEND

- LIMIT OF WORK
- EXISTING FENCES
- PROPERTY LINE

PLANTING NOTES

1. SEE L1.1 FOR BID ALTERNATE AND PLANT SCHEDULE.
2. SEE L1.2 FOR PLANTING DETAILS.
3. SEE SPECIFICATIONS FOR PLANT MATERIAL, TOP SOIL AND PLANTING MIX TYPES AND DEPTH, MULCHING, SOIL AMENDMENTS, FERTILIZERS AND WARRANTIES.
4. PLANTING SHALL CONFORM TO ALL CITY OF KIRKLAND CODE REQUIREMENTS, INCLUDING PRESERVATION OF ADEQUATE INTERSECTION SIGHT DISTANCE LINES/ TRIANGULAR AREAS.
5. CONTRACTOR SHALL VERIFY ON-SITE CONDITIONS PRIOR TO BIDDING AND CONSTRUCTION.
6. THE CONTRACTOR IS RESPONSIBLE FOR READING THE PLANS, SPECIFICATIONS AND NOTES.
7. THE CONTRACTOR SHALL VERIFY ALL PLANT MATERIAL QUANTITIES PRIOR TO INSTALLATION. ANY PLANT MATERIAL QUANTITIES LISTED ARE FOR THE CONVENIENCE OF THE CONTRACTOR. ACTUAL NUMBER OF SYMBOLS SHALL HAVE PRIORITY OVER QUANTITY DESIGNATED. THE CONTRACTOR SHALL BE RESPONSIBLE FOR COUNTING THE TOTAL NUMBER OF PLANTS INDICATED ON THE PLANS AND ESTIMATING GROUNDCOVER QUANTITIES.
8. THE CONTRACTOR SHALL FURNISH AND PAY FOR ALL CONTAINER OR FIELD GROWN TREES, SHRUBS AND GROUNDCOVERS, INCLUDING SEEDED AND SODDED TURF, HYDROMULCHES AND FLATTED GROUNDCOVERS. THE CONTRACTOR SHALL ALSO BE RESPONSIBLE AND PAY FOR: PLANTING OF ALL PLANT MATERIALS; THE SPECIFIED GUARANTEE OF ALL PLANT MATERIALS; THE STAKING AND GUYING OF TREES AND THE CONTINUOUS PROTECTION OF ALL PLANT MATERIALS UPON THEIR ARRIVAL AT THE SITE.
9. FOR FENCES, GATES, AND SITE FURNISHING, SEE ARCH. FOR PAVING, SEE CIVIL.
10. CONTRACTOR TO REPAIR ANY EXISTING SITE ELEMENTS TO REMAIN DAMAGED BY CONSTRUCTION AT NO COST TO THE OWNER.
11. RESTORE LANDSCAPE DISTURBED BY CONSTRUCTION TO EXISTING CONDITION OR BETTER, TYP.

TCA
ARCHITECTURE + PLANNING + DESIGN
6211 ROOSEVELT WAY NORTHEAST
SEATTLE, WA 98115
tel: (206) 522-3830
fax: (206) 522-2456
AHBL
TACOMA · SEATTLE · SPOKANE · TRI-CITIES
1200 6th Avenue, Suite 1620 Seattle, WA 98101
206.267.2425 TEL 206.267.2429 FAX www.ahbl.com WEB

STATE OF WASHINGTON CRAIG R. SKIPTON No. EXP. 03/05/2021 LANDSCAPE ARCHITECT

07/20/2020

BID SET

No.	Description	Date

Project Title:

Fire Station 24

City of Kirkland
Kirkland, Washington

Sheet Title:

PLANTING PLAN

Scale:

Project No. : 16-46

Date : July 21, 2020

Sheet Number :

L 1.0

Provided to Builders Exchange of WA, Inc. For usage Conditions Agreement see www.bxwa.com - Always Verify Scal

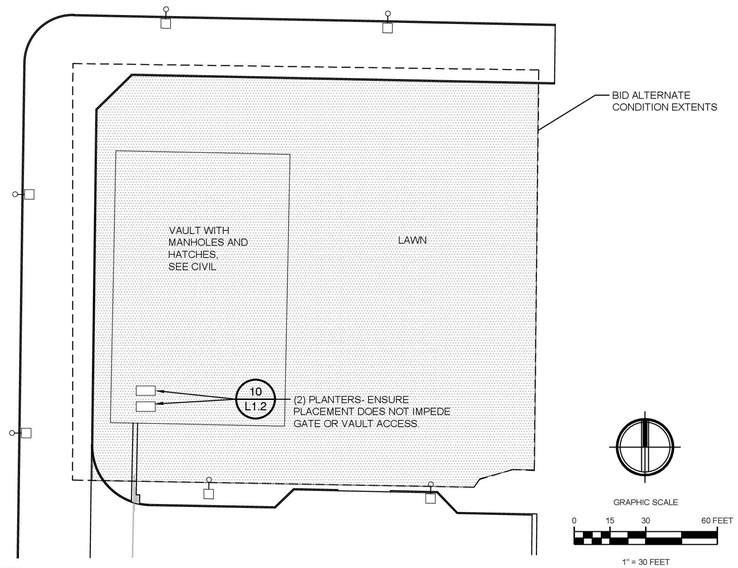

A LANDSCAPE PLAN- BID ALTERNATE 1

1" = 30'

NOTES

1. SEE L1.2 FOR LANDSCAPE DETAILS

LEGEND

LIMIT OF WORK

EXISTING FENCES

PROPERTY LINE

PLANT SCHEDULE STORM WATER AREA - BASE BID

BIORETENTION MIX-HYDROSEED OPTION		15,563 SF
CAREX OBNUPTA / SLOUGH SEDGE		3,891 SF
CAREX STIPATA / SAWBEAK SEDGE		3,891 SF
JUNCUS TENUIS / POVERTY RUSH		3,891 SF
SCIRPUS MICROCARPUS / SMALL-FRUITED BULRUSH		3,891 SF
BIORETENTION MIX-PLUG OPTION		15,539 SF
PLACE PLUGS IN GROUPINGS OF 5-11		
CAREX OBNUPTA / SLOUGH SEDGE		3,230
CAREX STIPATA / SAWBEAK SEDGE		3,230
JUNCUS TENUIS / POVERTY RUSH		3,230
SCIRPUS ACUTUS / HARDSTEM BULRUSH		3,230
SCIRPUS MICROCARPUS / SMALL-FRUITED BULRUSH		1,436

HYDROSEED POND FOR INSTALLATION DATES THAT ALLOW PLANTING AND AT LEAST (2) MONTHS OF ESTABLISHMENT BETWEEN MAY 1ST AND OCTOBER 1ST.
OR
PLUG POND FOR INSTALLATION DATES OUTSIDE THIS WINDOW.

PLANT SCHEDULE STORM WATER AREA- BID ALTERNATE

GROUND COVERS	CODE	BOTANICAL NAME	COMMON NAME	SPACING	QTY
		DROUGHT TOLERANT HYDROSEED LAWN MIX			31,162 SF

Know what's **below.**
Call before you dig.

PLANT SCHEDULE GENERAL SITE

TREES	CODE	BOTANICAL NAME	COMMON NAME	SIZE	QTY
	AC	ACER CIRCINATUM *MULTI-STEM SPECIMEN TREE- SUBMIT PHOTOS TO LANDSCAPE ARCHITECT FOR APPROVAL*	VINE MAPLE	4` HT MIN	1
	MV	MAGNOLIA GRANDIFLORA `VICTORIA`	SOUTHERN MAGNOLIA	2" CAL	17
	MA	MALUS X `ADIRONDACK` *SIZE PER CODE*	ADIRONDACK CRABAPPLE	2.5" CAL	14
	PV	PARROTIA PERSICA `VANESSA` *SIZE PER CODE*	PERSIAN PARROTIA	2.5" CAL	5
	PP	PARROTIA PERSICA `VANESSA`	PERSIAN PARROTIA	6` HT, MULTI TRUNK	12
	PO	PICEA OMORIKA	SERBIAN SPRUCE	6` HT	17

SHRUBS	CODE	BOTANICAL NAME	COMMON NAME	SIZE	QTY
	CL	COTONEASTER DAMMERI `LOWFAST`	LOWFAST BEARBERRY COTONEASTER	2 GAL	57
	MC3	MORELLA CALIFORNICA	CALIFORNIA WAX MYRTLE	2 GAL	4
	NG	NANDINA DOMESTICA `GULF STREAM` TM	GULF STREAM HEAVENLY BAMBOO	2 GAL	61
	RK	RIBES SANGUINEUM `KING EDWARD VII`	RED FLOWERING CURRANT	2 GAL	23

BULB	CODE	BOTANICAL NAME	COMMON NAME	SIZE	QTY
	CI	CAMASSIA LEICHTLINII	LEICHTLIN`S CAMAS	BULB	65

PERENNIALS	CODE	BOTANICAL NAME	COMMON NAME	SIZE	QTY
	PA2	PENNISETUM ALOPECUROIDES	FOUNTAIN GRASS	1 GAL	111
	PA	PEROVSKIA ATRIPLICIFOLIA	RUSSIAN SAGE	2 GAL	63
	PM	POLYSTICHUM MUNITUM	WESTERN SWORD FERN	2 GAL	315

VINES	CODE	BOTANICAL NAME	COMMON NAME	SIZE	QTY
	AQ	AKEBIA QUINATA	CHOCOLATE VINE	1 GAL	2
	PH	PARTHENOCISSUS HENRYANA	SILVERVEIN CREEPER	1 GAL	2

SHRUB AREAS	CODE	BOTANICAL NAME	COMMON NAME	SIZE	SPACING	QTY
		SHADE MIX				159 SF
		ASPLENIUM TRICHOMANES	MAIDENHAIR SPLEENWORT	1 GAL	9" o.c.	118
		CYCLAMEN COUM	WINTER CYCLAMEN	1 GAL	12" o.c.	50
		GROUP CYCLAMEN IN CLUSTERS OF 5-7				
		SMILACINA RACEMOSA	FALSE SOLOMON`S-SEAL	1 GAL	24" o.c.	5
		VANCOUVERIA HEXANDRA	WHITE INSIDEOUT FLOWER	1 GAL	12" o.c.	34

GROUND COVERS	CODE	BOTANICAL NAME	COMMON NAME	SIZE	SPACING	QTY
		DROUGHT TOLERANT HYDROSEED LAWN MIX *SEE SPECIFICATIONS*				21,258 SF
	AU	ARCTOSTAPHYLOS UVA-URSI	KINNIKINNICK	1 GAL	36" o.c.	469
	LB	LIRIOPE SPICATA `BIG BLUE`	CREEPING LILY TURF	1 GAL	18" o.c.	682
	MR	MAHONIA REPENS	CREEPING MAHONIA	1 GAL	36" o.c.	981
	RP	RUBUS CALYCINOIDES `EMERALD CARPET`	CREEPING RASPBERRY	1 GAL	18" o.c.	709
	RG2	RUDBECKIA FULGIDA `GOLDSTRUM`	BLACK-EYED SUSAN	1 GAL	24" o.c.	289
	SM	SALVIA X SYLVESTRIS `MAINACHT`	MAY NIGHT SALVIA	1 GAL	18" o.c.	167
	SA	SESLERIA AUTUMNALIS	AUTUMN MOOR GRASS	1 GAL	18" o.c.	87

TCA
ARCHITECTURE + PLANNING + DESIGN
6211 ROOSEVELT WAY
NORTHEAST
SEATTLE, WA 98115
tel: (206) 522-3830
fax: (206) 522-2456

AHBL
TACOMA · SEATTLE · SPOKANE · TRI-CITIES
1200 6th Avenue, Suite 1620 Seattle, WA 98101
206.267.2425 TEL 206.267.2429 FAX www.ahbl.com WEB

STATE OF WASHINGTON
CRAIG R. SKIPTON
No. 1 EXP. 03/05/2021
LANDSCAPE ARCHITECT

07/20/2020

BID SET

No.	Description	Date

Project Title:

Fire Station 24
City of Kirkland
Kirkland, Washington

Sheet Title:

PLANTING PLAN
BID ALTERNATE AND
PLANT SCHEDULE

Scale:

Project No. : **16-46**

Date : **July 21, 2020**

Sheet Number :

L 1.1

Provided to Builders Exchange of WA, Inc. For usage Conditions Agreement see www.bxwa.com - Always Verify Scal

NOTES:
1. TREES NOT PLANTED IN CONFORMANCE WITH THIS DETAIL WILL BE REJECTED BY THE LANDSCAPE ARCHITECT. REPLACEMENT OF REJECTED TREES WILL BE DONE AT THE CONTRACTOR'S EXPENSE.
2. PLANTING INCLUDES REMOVAL OF STAKES ONE YEAR AFTER INSTALLATION.

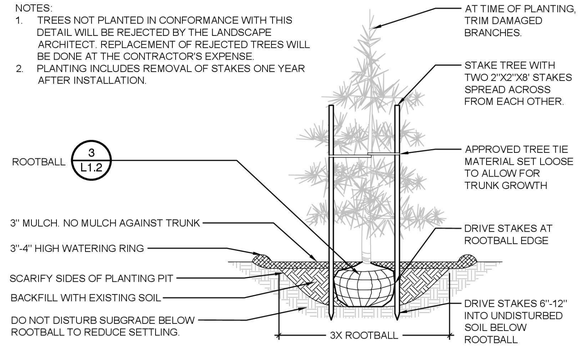

1 CONIFER TREE PLANTING W/ STAKE

3/8" = 1'-0" P-2017-KIR-71

NOTE:
1. TREES NOT PLANTED IN CONFORMANCE WITH THIS DETAIL WILL BE REJECTED BY THE LANDSCAPE ARCHITECT. REPLACEMENT OF REJECTED TREES WILL BE DONE AT THE CONTRACTOR'S EXPENSE.

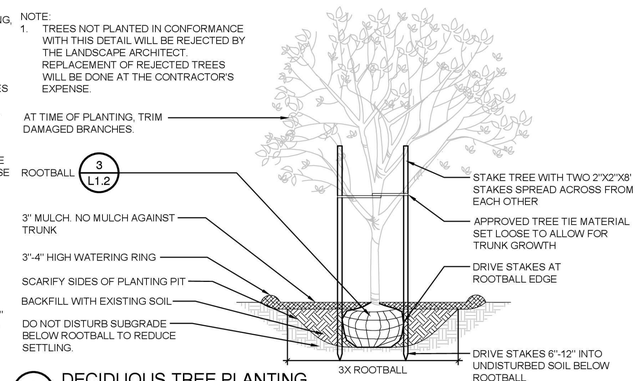

2 DECIDUOUS TREE PLANTING

3/8" = 1'-0" P-2017-KIR-01

NOTES:
1. TREES PLANTED TOO DEEP WITHOUT EXPOSING ROOT FLARE WILL BE REJECTED AND SHALL BE REMOVED AND REPLANTED AT PROPER DEPTH.
2. REPLACEMENT OR REPLANTING OF REJECTED TREES WILL BE DONE AT THE CONTRACTOR'S EXPENSE.
3. REMOVE EXCESS SOIL THAT MAY HAVE ACCUMULATED ABOVE THE TRUNK FLARE PRIOR TO DIGGING AT NURSERY. EXPOSE AND LOCATE TRUNK FLARE PRIOR TO PLANTING.
4. PRUNE ANY GIRDLING OR ADVENTITIOUS ROOTS PRIOR TO BACKFILLING.

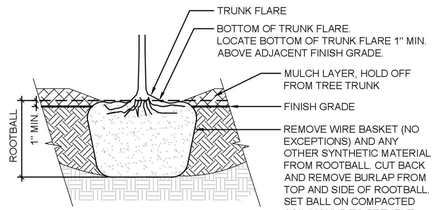

3 ROOTBALL

1" = 1'-0" P-2017-KIR-02

NOTE:
1. REFER TO SPECS FOR ADD'L INFORMATION.
2. REFER TO ARCH PLANS FOR FENCE LOCATIONS
3. BAMBOO STAKES SHALL BE REMOVED AFTER 1 YEAR.

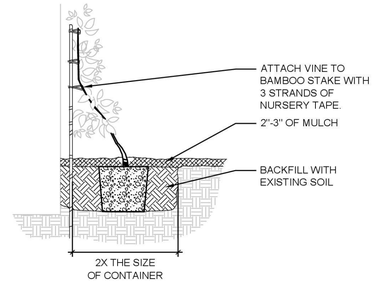

4 VINE PLANTING

3/4" = 1'-0" P-2017-KIR-04

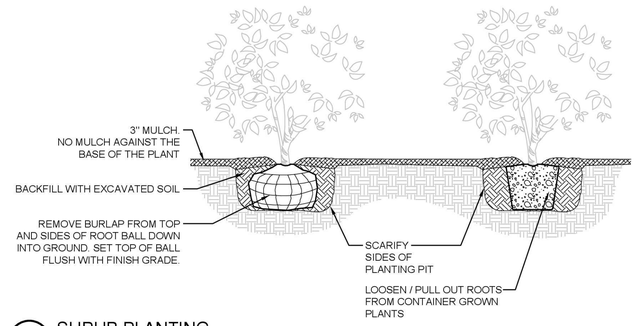

5 SHRUB PLANTING

NTS P-2017-KIR-03

NOTE:
1. ALL GROUNDCOVER TO BE PLANTED AT EQUAL TRIANGULAR SPACING PER O.C. SPACING ON LEGEND.

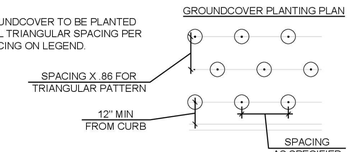

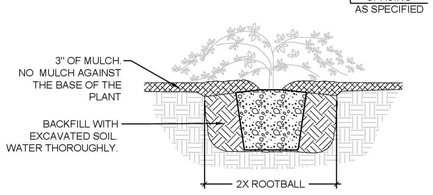

6 GROUNDCOVER PLANTING

1/2" = 1'-0" P-2017-KIR-66

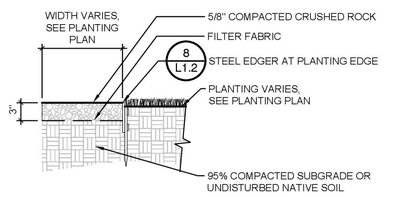

7 GRAVEL PAVING

1" = 1'-0" P-2017-KIR-07

NOTE:
INSTALL EDGING PER MANUFACTURER'S SPECIFICATIONS WITH TOP OF EDGING 1/4" TO 1/2" ABOVE COMPACTED FINISH GRADE (TURF SIDE).

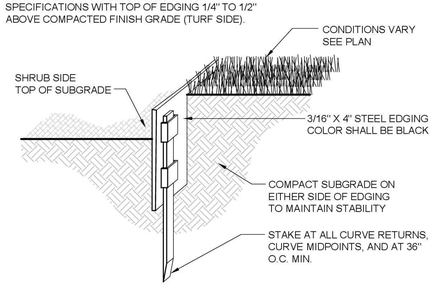

8 STEEL EDGING

1" = 1'-0" P-2017-KIR-09

NOTE:
1. NET SHALL BE PORTABLE MODEL. OWNER TO PROVIDE.

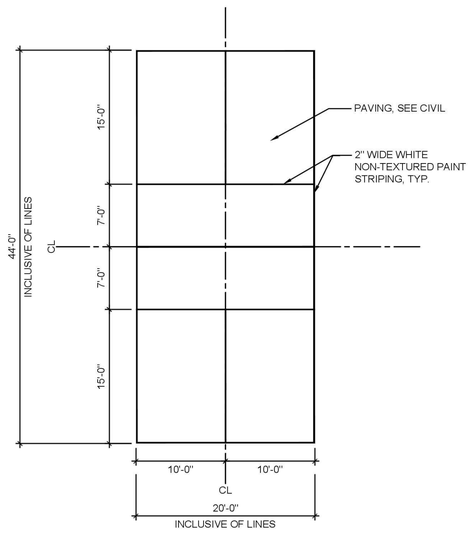

9 PICKLEBALL COURT

1/8" = 1'-0" P-2017-KIR-72

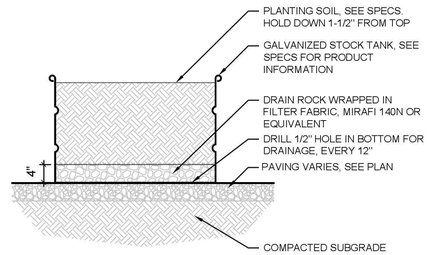

10 PLANTER

3/4" = 1'-0"

811 Know what's **below.** **Call** before you dig.

Provided to Builders Exchange of WA, Inc. For usage Conditions Agreement see www.bxwa.com - Always Verify Scal

TCA
ARCHITECTURE + PLANNING + DESIGN
6211 ROOSEVELT WAY NORTHEAST
SEATTLE, WA 98115
tel: (206) 522-3830
fax: (206) 522-2456

AHBL
TACOMA · SEATTLE · SPOKANE · TRI-CITIES
1200 6th Avenue, Suite 1620 Seattle, WA 98101
206.267.2425 TEL 206.267.2429 FAX www.ahbl.com WEB

STATE OF WASHINGTON CRAIG R. SKIPTON No. 21611 EXP. 03/05/2021 LANDSCAPE ARCHITECT

07/20/2020

BID SET

No.	Description	Date

Project Title:

Fire Station 24

City of Kirkland
Kirkland, Washington

Sheet Title:

LANDSCAPE DETAILS

Scale:
Project No. : 16-46
Date : July 21, 2020
Sheet Number :

L 1.2

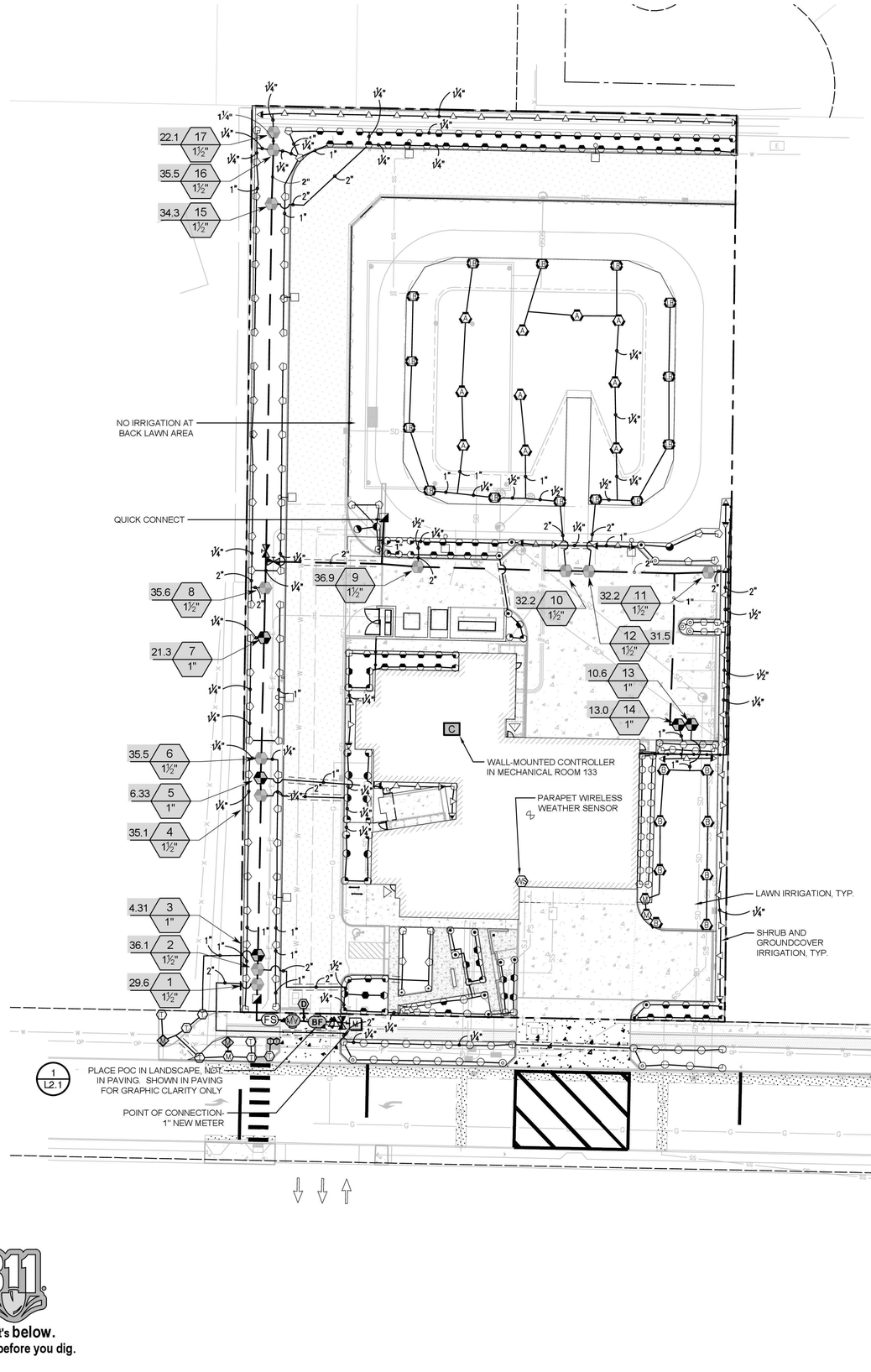

IRRIGATION SCHEDULE

SYMBOL	MANUFACTURER/MODEL/DESCRIPTION	PSI
EST LCS RCS CST SST	HUNTER PROS-12-PRS30-CV-F 5' STRIP SPRAY SHRUB SPRAY, 30 PSI REGULATED 12.0" POP-UP. WITH FACTORY INSTALLED DRAIN CHECK VALVE AND FLOGUARD. CO-MOLDED WIPER SEAL WITH UV RESISTANT MATERIAL. RECLAIMED PURPLE CAP.	30
Q H F	HUNTER PROS-12-PRS30-CV-F 5' RADIUS SHRUB SPRAY, 30 PSI REGULATED 12.0" POP-UP. WITH FACTORY INSTALLED DRAIN CHECK VALVE AND FLOGUARD. CO-MOLDED WIPER SEAL WITH UV RESISTANT MATERIAL. RECLAIMED PURPLE CAP.	30
Q T H F	HUNTER PROS-12-PRS30-CV-F 8' RADIUS SHRUB SPRAY, 30 PSI REGULATED 12.0" POP-UP. WITH FACTORY INSTALLED DRAIN CHECK VALVE AND FLOGUARD. CO-MOLDED WIPER SEAL WITH UV RESISTANT MATERIAL. RECLAIMED PURPLE CAP.	30
Q T H F	HUNTER PROS-12-PRS30-CV-F 10' RADIUS SHRUB SPRAY, 30 PSI REGULATED 12.0" POP-UP. WITH FACTORY INSTALLED DRAIN CHECK VALVE AND FLOGUARD. CO-MOLDED WIPER SEAL WITH UV RESISTANT MATERIAL. RECLAIMED PURPLE CAP.	30
Q T H TT TQ F	HUNTER PROS-12-PRS30-CV-F 12' RADIUS SHRUB SPRAY, 30 PSI REGULATED 12.0" POP-UP. WITH FACTORY INSTALLED DRAIN CHECK VALVE AND FLOGUARD. CO-MOLDED WIPER SEAL WITH UV RESISTANT MATERIAL. RECLAIMED PURPLE CAP.	30
Q T H TT TQ F	HUNTER PROS-12-PRS30-CV-F 15' RADIUS SHRUB SPRAY, 30 PSI REGULATED 12.0" POP-UP. WITH FACTORY INSTALLED DRAIN CHECK VALVE AND FLOGUARD. CO-MOLDED WIPER SEAL WITH UV RESISTANT MATERIAL. RECLAIMED PURPLE CAP.	30
Q H	HUNTER PROS-12-PRS30-CV-F 17' RADIUS SHRUB SPRAY, 30 PSI REGULATED 12.0" POP-UP. WITH FACTORY INSTALLED DRAIN CHECK VALVE AND FLOGUARD. CO-MOLDED WIPER SEAL WITH UV RESISTANT MATERIAL. RECLAIMED PURPLE CAP.	30
4 6 8 10 12 15 17	HUNTER PROS-12-PRS30-CV-F ADJUSTABLE ARC SHRUB SPRAY, 30 PSI REGULATED 12.0" POP-UP. WITH FACTORY INSTALLED DRAIN CHECK VALVE AND FLOGUARD. CO-MOLDED WIPER SEAL WITH UV RESISTANT MATERIAL. RECLAIMED PURPLE CAP.	30
T	HUNTER MP CORNER PROS-04-PRS40-CV-F TURF ROTATOR, 4" POP-UP WITH FACTORY INSTALLED CHECK VALVE, FLOGUARD, PRESSURE REGULATED TO 40 PSI, MP ROTATOR NOZZLE. T=TURQUOISE ADJ ARC 45-105 ON PRS40 BODY.	40
M L O	HUNTER MP1000 PROS-04-PRS40-CV-F TURF ROTATOR, 4" POP-UP WITH CHECK VALVE, FLOGUARD, PRESSURE REGULATED TO 40 PSI, MP ROTATOR NOZZLE ON PRS40 BODY. M=MAROON ADJ ARC 90 TO 210, L=LIGHT BLUE 210 TO 270 ARC, O=OLIVE 360 ARC.	40
B Y A	HUNTER MP3000 PROS-04-PRS40-CV-F TURF ROTATOR, 4" POP-UP WITH FACTORY INSTALLED CHECK VALVE, FLOGUARD, PRESSURE REGULATED TO 40 PSI, MP ROTATOR NOZZLE ON PRS40 BODY. B=BLUE ADJ ARC 90-210, Y=YELLOW ADJ ARC 210-270, A=GRAY 360 ARC.	35
LB	HUNTER MP3500 PROS-04-PRS40-CV-F TURF ROTATOR, 4.0" POP-UP WITH FACTORY INSTALLED CHECK VALVE, FLOGUARD, PRESSURE REGULATED TO 40 PSI, MP ROTATOR NOZZLE ON PRS40 BODY. LB=LIGHT BROWN ADJUSTABLE ARC, 90-210.	35
ADJ. 360	HUNTER MP800SR PROS-04-PRS40-CV-F TURF ROTATOR, 4.0" POP-UP WITH CHECK VALVE, FLOGUARD, PRESSURE REGULATED TO 40 PSI, MP ROTATOR NOZZLE ON PRS40 BODY. ADJ=ORANGE AND GRAY (ARC 90-210), 360=LIME GREEN AND GRAY (ARC 360)	40
MR LR BR	HUNTER MP815 PROS-04-PRS40-CV-F TURF ROTATOR, 4" POP-UP WITH CHECK VALVE, FLOGUARD, PRESSURE REGULATED TO 40 PSI, MP ROTATOR NOZZLE ON PRS40 BODY. M=MAROON AND GRAY ADJ ARC 90 TO 210, L=LIGHT BLUE AND GRAY 210 TO 270 ARC, O=OLIVE AND GRAY 360 ARC.	40

SYMBOL	MANUFACTURER/MODEL/DESCRIPTION
ICV	HUNTER ICV-G 1", 1-1/2", 2", AND 3" PLASTIC ELECTRIC REMOTE CONTROL VALVES, GLOBE CONFIGURATION, WITH NPT THREADED INLET/OUTLET, FOR COMMERCIAL/MUNICIPAL USE.
HQ	HUNTER HQ-44LRC QUICK COUPLER VALVE, YELLOW RUBBER LOCKING COVER, RED BRASS AND STAINLESS STEEL, WITH 1" NPT INLET, 2-PIECE BODY.
MV	MATCO-NORCA 759 BRASS SHUT OFF BALL VALVE, 1/2" TO 4". TWO PIECE BODY, BLOW-OUT PROOF STEM, CHROME PLATED SOLID BRASS BALL, THREADED, WITH PTFE SEATS. SAME SIZE AS MAINLINE PIPE.
ASV	HUNTER ISV 1" 1", 1-1/2", 2", AND 3" BRASS ELECTRIC MASTER VALVE, GLOBE CONFIGURATION, WITH NPT THREADED INLET/OUTLET, FOR COMMERCIAL/MUNICIPAL USE.
D	DRAIN VALVE
PR	ZURN WILKINS 600 PRESSURE REDUCING VALVE
BF	FEBCO 850 3/4" DOUBLE CHECK BACKFLOW PREVENTION, 1/2" TO 2"
C	WEATHERMATIC SL1600-WIFI WITH (2) SLM12-1600 SMARTLINE 24-ZONE WIFI CONTROLLER, INTERNAL 120VAC/220VAC TRANSFORMER, LARGE BACKLIT LCD DISPLAY
WS	WEATHERMATIC SLWS WIRELESS WEATHER SENSOR FOR ET BASED WATERING, 900MHZ - 1500' LINE OF SITE RANGE
FS	WEATHERMATIC SLFSI-T10 1" 1" TEE TYPE INSERT FLOW SENSOR USED WITH THE SMARTLINK FLOW ARCARD
M	WATER METER 1"
	IRRIGATION LATERAL LINE: PVC SCHEDULE 40
	IRRIGATION MAINLINE: PVC SCHEDULE 40
	PIPE SLEEVE: PVC SCHEDULE 40
	Valve Callout: Valve Number, Valve Flow, Valve Size

NOTES

1. SEE L2.1 FOR IRRIGATION DETAILS.
2. SEE L2.2 FOR IRRIGATION NOTES AND TABLES.

GRAPHIC SCALE
0 15 30 60 FEET
1" = 30 FEET

811 Know what's below. Call before you dig.

TCA
ARCHITECTURE + PLANNING + DESIGN
6211 ROOSEVELT WAY NORTHEAST
SEATTLE, WA 98115
tel: (206) 522-3830
fax: (206) 522-2456

AHBL
TACOMA · SEATTLE · SPOKANE · TRI-CITIES
1200 6th Avenue, Suite 1620 Seattle, WA 98101
206.267.2425 TEL 206.267.2429 FAX www.ahbl.com WEB

STATE OF WASHINGTON CRAIG R. SKIPTON No. 21611 EXP.03/05/2021 LANDSCAPE ARCHITECT

07/20/2020

BID SET

No.	Description	Date:

Project Title:

Fire Station 24

City of Kirkland
Kirkland, Washington

Sheet Title:

IRRIGATION PLAN

Scale:
Project No. : 16-46
Date : July 21, 2020
Sheet Number :

L2.0

Provided to Builders Exchange of WA, Inc. For usage Conditions Agreement see www.bxwa.com - Always Verify Scal

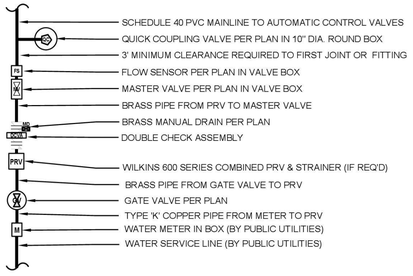

NOTES:
1. BACKFLOW PREVENTION DEVICE INSTALLATIONS REQUIRE INSPECTION AND CERTIFICATION BY PUBLIC UTILITIES INSPECTION SERVICES.

1 P.O.C. SCHEMATIC DIAGRAM
3/4" = 1'-0" P-2017-KIR-13

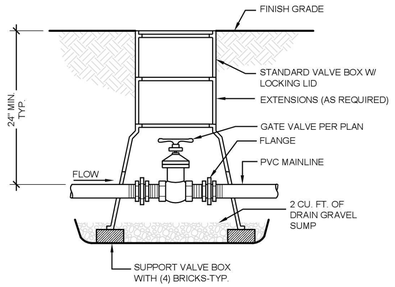

NOTE:
1. USE TEFLON TAPE ON ALL THREADED FITTINGS.
2. REFER TO SPECIFICATIONS FOR ADDITIONAL INFORMATION.

2 GATE VALVE
1 1/2" = 1'-0" P-2017-KIR-10

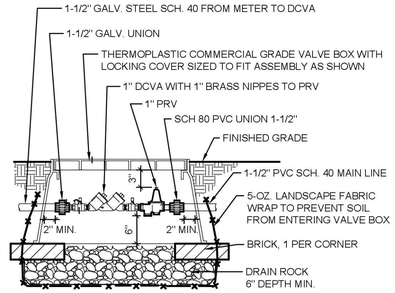

3 DVCA WITH PRV
3/4" = 1'-0"

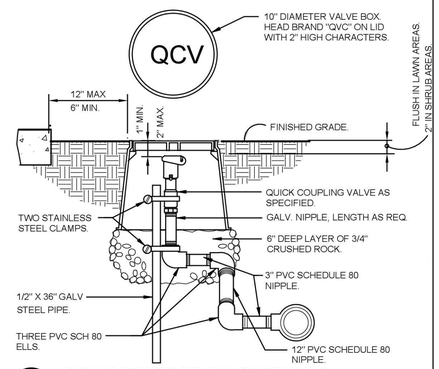

4 QUICK COUPLER IN VALVE BOX
1 1/2" = 1'-0"

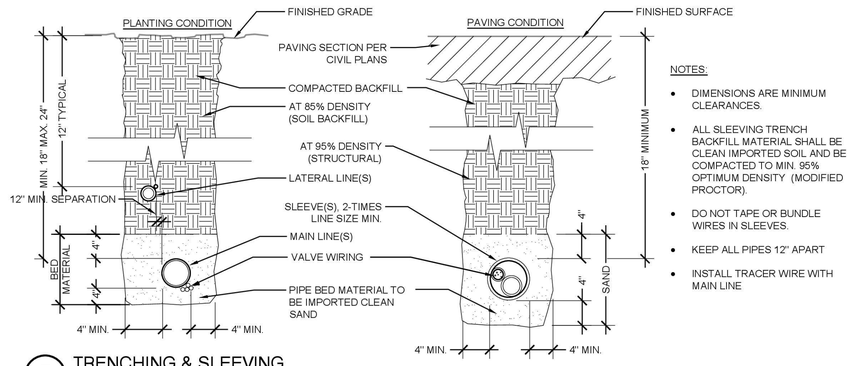

NOTES:
- DIMENSIONS ARE MINIMUM CLEARANCES.
- ALL SLEEVING TRENCH BACKFILL MATERIAL SHALL BE CLEAN IMPORTED SOIL AND BE COMPACTED TO MIN. 95% OPTIMUM DENSITY (MODIFIED PROCTOR).
- DO NOT TAPE OR BUNDLE WIRES IN SLEEVES.
- KEEP ALL PIPES 12" APART
- INSTALL TRACER WIRE WITH MAIN LINE

5 TRENCHING & SLEEVING
NTS P-2017-KIR-06

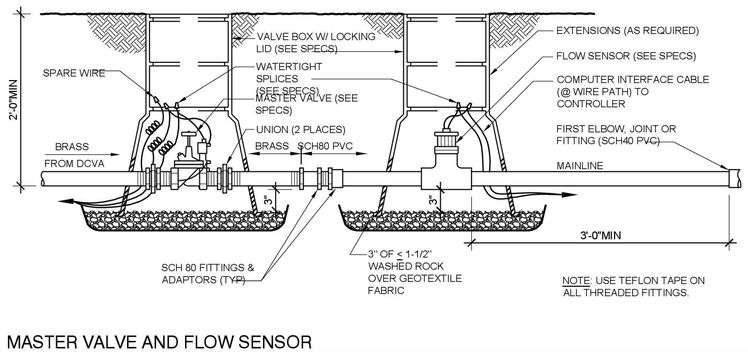

6 MASTER VALVE AND FLOW SENSOR
1" = 10' P-2017-KIR-12

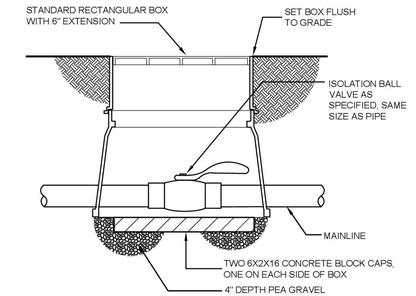

7 PVC BALL ISOLATION VALVE
NTS P-2017-KIR-81

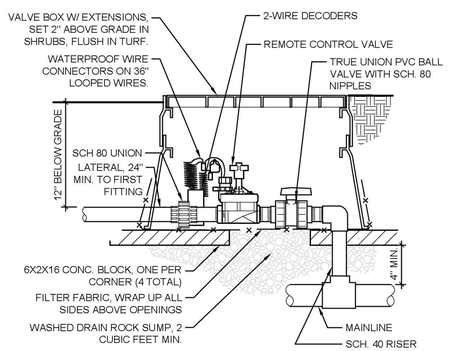

8 REMOTE CONTROL VALVES
NTS P-2017-KIR-78

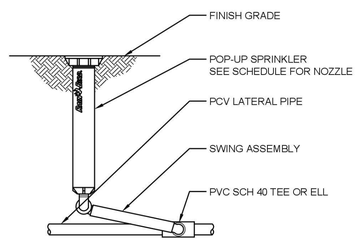

9 POP-UP SPRAY HEAD
3" = 1'-0"

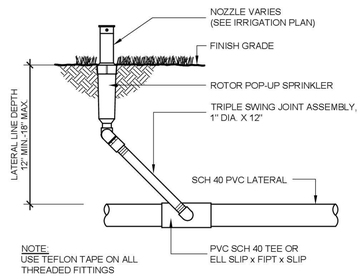

10 POP-UP ROTOR HEAD
1/8" = 1'-0" P-2017-KIR-43

811 Know what's **below.** **Call** before you dig.

Provided to Builders Exchange of WA, Inc. For usage Conditions Agreement see www.bxwa.com - Always Verify Scal

TCA
ARCHITECTURE + PLANNING + DESIGN
6211 ROOSEVELT WAY
NORTHEAST
SEATTLE, WA 98115
tel: (206) 522-3830
fax: (206) 522-2456

AHBL
TACOMA · SEATTLE · SPOKANE · TRI-CITIES
1200 6th Avenue, Suite 1620 Seattle, WA 98101
206.267.2425 TEL 206.267.2429 FAX www.ahbl.com WEB

STATE OF WASHINGTON CRAIG R. SKIPTON No. EXP. 03/05/2021 LANDSCAPE ARCHITECT

07/20/2020

BID SET

No.	Description	Date:

Project Title:

Fire Station 24
City of Kirkland
Kirkland, Washington

Sheet Title:

IRRIGATION DETAILS

Scale:
Project No. : 16-46
Date : July 21, 2020
Sheet Number :

L2.1

GENERAL IRRIGATION NOTES

1. BID ALT LAWN WOULD NOT BE IRRIGATED. SEE L1.1 FOR BID ALT PLANTING PLAN.
2. NO SUBSTITUTIONS OF EQUIPMENT OR DESIGN CHANGES SHALL BE PERMITTED UNLESS APPROVED BY THE OWNER.
3. IRRIGATION LINES AND VALVES MAY BE SHOWN IN HARD SURFACE AREAS OR OUTSIDE LANDSCAPE AREAS FOR GRAPHIC CLARITY. LOCATE ALL IRRIGATION LINES IN LANDSCAPE AREAS OR IN SLEEVES UNDER PAVEMENT.
4. IRRIGATION CONTRACTOR SHALL COORDINATE INSTALLATION OF IRRIGATION CONDUIT AND SLEEVES UNDER HARD SURFACES WITH RESPECTIVE CONTRACTORS.
5. CONTRACTOR SHALL BE RESPONSIBLE FOR OBTAINING ALL PERMITS, TESTS, AND INSPECTIONS REQUIRED FOR THE IRRIGATION SYSTEM.
6. CALL FOR LOCATES PRIOR TO DIGGING AT 811. CONTRACTOR IS RESPONSIBLE TO VERIFY UTILITY LOCATIONS. IF UTILITIES ARE DAMAGED IN THE COURSE OF WORK, CONTRACTOR SHALL INFORM THE OWNER AND MAKE ANY REPAIRS REQUIRED, AT NO COST TO THE OWNER.
7. ALL SLEEVING SHALL BE MARKED, SEALED AND STAKED. ALL SLEEVES SHALL BE TWICE THE SIZE OF OF THE LINE OR COMBINED LINES. MINIMUM SLEEVE SIZE SHALL BE 4-INCHES IF LOCATED UNDER ROADWAY OR DRIVE AISLE.
8. COORDINATE SLEEVING LOCATIONS WITH ELECTRICAL CONDUIT.
9. SPLICE CONTROL WIRES WITHIN VALVE BOXES ONLY, USING 3M-DBY, OR APPROVED SPLICE KITS, AND PROVIDE A 24" EXPANSION LOOP FOR ALL CONTROL WIRES WITHIN EACH VALVE BOX. KEEP WIRE SPLICES TO A MINIMUM. PROVIDE CLEAN WIRE CUTS WITH NEW SPLICE KITS AT ALL SPLICES INCLUDING ANY SPLICE THAT IS DISCONNECTED AND RECONNECTED FOR ANY REASON OR PERIOD OF TIME.
10. VALVE BOXES SHALL BE COMMERCIAL-GRADE POLYETHYLENE OR HDPE AND SUITABLE FOR LIGHT DUTY APPLICATIONS.
11. INSTALLER TO ADJUST ALL ZONE CONTROL VALVES TO THE CORRECT OPERATING PRESSURE. SEE VALVE SCHEDULE FOR OPERATING PSI.
12. VERIFY AT LEAST A 15PSI DIFFERENCE BETWEEN PRS DEVICES. IF PRESSURE DIFFERENCES IS LESS THAN 15PSI, NOTIFY L.A. IMMEDIATELY.
13. CONTRACTOR SHALL HAND TRENCH IRRIGATION DITCHES WHEN WITHIN 20 FEET, OR WITHIN A DELINEATED ROOT PROTECTION ZONE, OF EXISTING TREES TO REMAIN. AVOID CUTTING ANY ROOTS OVER 3" - 4" IN DIAMETER WITHIN THE ROOT PROTECTION ZONE.
14. INSTALLER SHALL BE RESPONSIBLE FOR KEEPING EXACT ACCURATE NOTES AND "AS-BUILTS" FOR THE CREATION OF THE "RECORD DRAWINGS" OF THE INSTALLED SYSTEM.
15. CONTRACTOR SHALL PROVIDE IRRIGATION MAINTENANCE THROUGH THE PLANT ESTABLISHMENT PERIOD INCLUDING WINTERIZATION(S) AND SPRING START-UP(S).

IRRIGATION SYSTEM DESIGN NOTES

1. WATER PURVEYOR: KIRKLAND UTILITIES.
2. CONTACT INFORMATION: (425)-587-3150
3. THIS DESIGN ADDS A NEW IRRIGATION SYSTEM FOR THE AREAS AFFECTED BY CONSTRUCTION OF A NEW FIRE STATION.
4. CONTRACTOR SHALL FIELD VERIFY ALL EXISTING IRRIGATION EQUIPMENT AND ZONES IMPACTED BY AN OFF-SITE SIDEWALK WORK PRIOR TO CONSTRUCTION. PROVIDE SHOP DRAWINGS INDICATING ZONE FLOW AND HEAD LOCATION OF AFFECTED ZONES AND HOW THE CONTRACTOR INTENDS TO ADJUST THE EXISTING SYSTEM TO ACCOMMODATE NEW ZONES.
5. PROVIDE TEMPORARY IRRIGATION TO ALL UNDISTURBED ZONES DURING CONSTRUCTION.

POINT OF CONNECTION NOTES

1. CONTRACTOR SHALL VERIFY EXISTING STATIC PRESSURE AT THE METER AND SUBMIT WRITTEN VERIFICATION TO THE LANDSCAPE ARCHITECT. NOTIFY THE LANDSCAPE ARCHITECT OF DISCREPANCIES GREATER THAN 5 POUNDS OF DESIGN PRIOR TO INSTALLATION OF ANY IRRIGATION EQUIPMENT.
2. POC: NEW 1" IRRIGATION METER.
   2.1. THE SYSTEM DESIGN IS BASED ON OPERATING 1 ZONE AT A TIME USING A NEW IRRIGATION METER ON A 1-1/2" SCH. 40 PVC SUPPLY LINE. CONTRACTOR SHALL FIELD VERIFY SIZE AND LOCATION.
3. COORDINATE METER SCOPE OF WORK WITH ALL APPLICABLE TRADES. INSTALL METER PER KIRKLAND UTILITIES.
4. IRRIGATION CONTRACTOR SHALL TIE INTO METER AND RUN PIPE TO BACKFLOW PREVENTER.
5. NOTIFY THE OWNER IMMEDIATELY IF THE POINT OF CONNECTION ASSUMPTIONS MADE HERE DO NOT MATCH FIELD CONDITIONS.

CONTROLLER NOTES

1. CONTROLLER: INSTALL NEW WALL MOUNTED TWO-WIRE BASELINE CONTROLLER. CONFIRM LOCATIONS WITH OWNER PRIOR TO INSTALLATION.
2. PROVIDE 120V FROM ELECTRICAL SERVICE PER LOCAL UTILITY REQUIREMENTS AND APPLICABLE CODES. SEE ELECTRICAL PLAN FOR MORE INFORMATION.
3. PROVIDE COMMUNICATION CONNECTION FROM CONTROLLER TO FLOW METER AND MASTER VALVE. ESTABLISH CONNECTION TO WIRELESS WEATHER SENSOR.
4. INSTALL CONTROLLER PER MANUFACTURER'S RECOMMENDATIONS. PROVIDE GROUNDING PER MANUFACTURER'S REQUIREMENTS.
5. PROGRAM CONTROLLER WITH TEMPORARY ESTABLISHMENT AND PERMANENT WATERING SCHEDULE.
6. INSTALL SPARE CONTROL WIRE (ORANGE COLOR) FROM CONTROLLER TO FARTHEST VALVE.

CRITICAL ANALYSIS

Generated:	2020-07-18 15:11
P.O.C. NUMBER: 01	
Water Source Information:	
FLOW AVAILABLE	
Water Meter Size:	1"
Flow Available:	37.50 gpm
PRESSURE AVAILABLE	
Static Pressure at POC:	90.00 psi
Elevation Change:	5.00 ft
Service Line Size:	3"
Length of Service Line:	20.00 ft
Pressure Available:	88.00 psi
DESIGN ANALYSIS	
Maximum Station Flow:	36.86 gpm
Flow Available at POC:	37.50 gpm
Residual Flow Available:	0.64 gpm
Critical Station:	10
Design Pressure:	35.00 psi
Friction Loss:	3.48 psi
Fittings Loss:	0.35 psi
Elevation Loss:	0.00 psi
Loss through Valve:	1.54 psi
Pressure Req. at Critical Station:	40.36 psi
Loss for Fittings:	0.34 psi
Loss for Main Line:	3.37 psi
Loss for POC to Valve Elevation:	0.00 psi
Loss for Backflow:	10.33 psi
Loss for Master Valve:	4.66 psi
Loss for Water Meter:	6.20 psi
Critical Station Pressure at POC:	65.26 psi
Pressure Available:	88.00 psi
Residual Pressure Available:	22.74 psi

VALVE SCHEDULE

NUMBER	MODEL	SIZE	TYPE	GPM	PSI	PSI @ POC	PRECIP
1	HUNTER ICV-G	1-1/2"	SHRUB SPRAY	29.62	35.87	55.37	1.72 in/h
2	HUNTER ICV-G	1-1/2"	SHRUB SPRAY	36.14	34.62	59.95	1.61 in/h
3	HUNTER ICV-G	1"	TURF ROTARY	4.31	42.94	51.37	0.49 in/h
4	HUNTER ICV-G	1-1/2"	SHRUB SPRAY	35.13	34.15	59.45	1.83 in/h
5	HUNTER ICV-G	1"	SHRUB SPRAY	6.33	33.60	42.44	1.81 in/h
6	HUNTER ICV-G	1-1/2"	SHRUB SPRAY	35.48	34.17	60	1.38 in/h
7	HUNTER ICV-G	1"	SHRUB SPRAY	21.33	36.57	51.52	1.17 in/h
8	HUNTER ICV-G	1-1/2"	SHRUB SPRAY	35.55	33.86	60.66	1.28 in/h
9	HUNTER ICV-G	1-1/2"	SHRUB SPRAY	36.86	34.78	63.96	1.55 in/h
10	HUNTER ICV-G	1-1/2"	TURF ROTARY	32.19	40.37	65.26	0.34 in/h
11	HUNTER ICV-G	1-1/2"	SHRUB SPRAY	32.19	37.08	62.59	1.60 in/h
12	HUNTER ICV-G	1-1/2"	TURF ROTARY	31.55	40.14	64.43	0.33 in/h
13	HUNTER ICV-G	1"	TURF ROTARY	10.61	39.16	52.14	0.39 in/h
14	HUNTER ICV-G	1"	SHRUB SPRAY	12.74	33.99	48.69	1.45 in/h
15	HUNTER ICV-G	1-1/2"	SHRUB SPRAY	34.28	35.34	62.76	1.69 in/h
16	HUNTER ICV-G	1-1/2"	SHRUB SPRAY	35.48	33.68	62.73	1.31 in/h
17	HUNTER ICV-G	1-1/2"	SHRUB SPRAY	22.10	35.91	52.75	1.67 in/h

811 Know what's below. Call before you dig.

TCA
ARCHITECTURE + PLANNING + DESIGN
6211 ROOSEVELT WAY
NORTHEAST
SEATTLE, WA 98115
tel: (206) 522-3830
fax: (206) 522-2456

AHBL
TACOMA · SEATTLE · SPOKANE · TRI-CITIES
1200 6th Avenue, Suite 1620 Seattle, WA 98101
206.267.2425 TEL 206.267.2429 FAX www.ahbl.com WEB

STATE OF WASHINGTON
CRAIG R. SKIPTON
No. 21891
LANDSCAPE ARCHITECT
EXP. 03/05/2021

07/20/2020

BID SET

No.	Description	Date

Project Title:

Fire Station 24

City of Kirkland
Kirkland, Washington

Sheet Title:

IRRIGATION NOTES

Scale:

Project No. : 16-46

Date : July 21, 2020

Sheet Number :

L2.2

Provided to Builders Exchange of WA, Inc. For usage Conditions Agreement see www.bxwa.com - Always Verify Scal

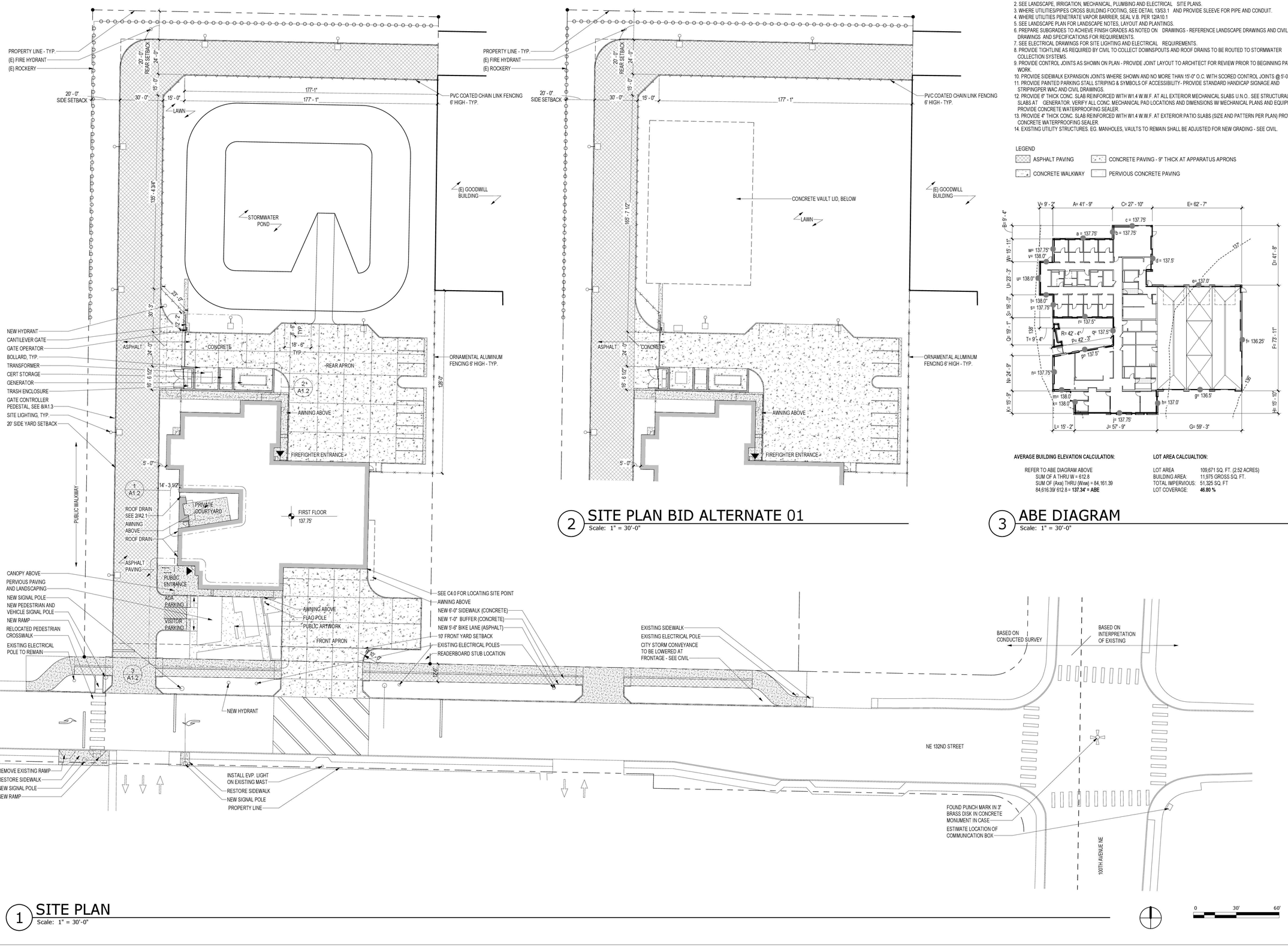

1 SITE PLAN
Scale: 1" = 30'-0"

2 SITE PLAN BID ALTERNATE 01
Scale: 1" = 30'-0"

GENERAL SITE PLAN NOTES

GENERAL NOTES
1. SEE CIVIL DRAWINGS FOR GRADING, PAVING, AND SITE UTILITIES.
2. SEE LANDSCAPE, IRRIGATION, MECHANICAL, PLUMBING AND ELECTRICAL SITE PLANS.
3. WHERE UTILITIES/PIPES CROSS BUILDING FOOTING, SEE DETAIL 13/S3.1 AND PROVIDE SLEEVE FOR PIPE AND CONDUIT.
4. WHERE UTILITIES PENETRATE VAPOR BARRIER, SEAL V.B. PER 12/A10.1
5. SEE LANDSCAPE PLAN FOR LANDSCAPE NOTES, LAYOUT AND PLANTINGS.
6. PREPARE SUBGRADES TO ACHIEVE FINISH GRADES AS NOTED ON DRAWINGS - REFERENCE LANDSCAPE DRAWINGS AND CIVIL DRAWINGS AND SPECIFICATIONS FOR REQUIREMENTS.
7. SEE ELECTRICAL DRAWINGS FOR SITE LIGHTING AND ELECTRICAL REQUIREMENTS.
8. PROVIDE TIGHTLINE AS REQUIRED BY CIVIL TO COLLECT DOWNSPOUTS AND ROOF DRAINS TO BE ROUTED TO STORMWATER COLLECTION SYSTEMS.
9. PROVIDE CONTROL JOINTS AS SHOWN ON PLAN - PROVIDE JOINT LAYOUT TO ARCHITECT FOR REVIEW PRIOR TO BEGINNING PAVING WORK.
10. PROVIDE SIDEWALK EXPANSION JOINTS WHERE SHOWN AND NO MORE THAN 15'-0" O.C. WITH SCORED CONTROL JOINTS @ 5'-0" O.C.
11. PROVIDE PAINTED PARKING STALL STRIPING & SYMBOLS OF ACCESSIBILITY - PROVIDE STANDARD HANDICAP SIGNAGE AND STRIPINGPER WAC AND CIVIL DRAWINGS.
12. PROVIDE 6" THICK CONC. SLAB REINFORCED WITH W1.4 W.W.F. AT ALL EXTERIOR MECHANICAL SLABS U.N.O.. SEE STRUCTURAL FOR SLABS AT GENERATOR. VERIFY ALL CONC. MECHANICAL PAD LOCATIONS AND DIMENSIONS W/ MECHANICAL PLANS AND EQUIPMENT. PROVIDE CONCRETE WATERPROOFING SEALER.
13. PROVIDE 4" THICK CONC. SLAB REINFORCED WITH W1.4 W.W.F. AT EXTERIOR PATIO SLABS (SIZE AND PATTERN PER PLAN) PROVIDE CONCRETE WATERPROOFING SEALER.
14. EXISTING UTILITY STRUCTURES. EG. MANHOLES, VAULTS TO REMAIN SHALL BE ADJUSTED FOR NEW GRADING - SEE CIVIL.

LEGEND
- ASPHALT PAVING
- CONCRETE PAVING - 9" THICK AT APPARATUS APRONS
- CONCRETE WALKWAY
- PERVIOUS CONCRETE PAVING

3 ABE DIAGRAM
Scale: 1" = 30'-0"

AVERAGE BUILDING ELEVATION CALCULATION:

REFER TO ABE DIAGRAM ABOVE
SUM OF A THRU W = 612.8
SUM OF (Axa) THRU (Wxw) = 84,161.39
84,616.39/ 612.8 = **137.34' = ABE**

LOT AREA CALCUALTION:

LOT AREA	109,671 SQ. FT. (2.52 ACRES)
BUILDING AREA:	11,975 GROSS SQ. FT.
TOTAL IMPERVIOUS:	51,325 SQ. FT
LOT COVERAGE:	**46.80 %**

TCA
ARCHITECTURE + PLANNING + DESIGN
6211 ROOSEVELT WAY NORTHEAST
SEATTLE, WA 98115
tel: (206) 522-3830
fax: (206) 522-2456

6235 REGISTERED ARCHITECT
BRIAN J. HARRIS
STATE OF WASHINGTON

July 21, 2020

BID SET

No.	Description	Date:

Project Title:

Fire Station 24
City of Kirkland
Kirkland, Washington

Sheet Title:
SITE PLAN

Scale: 1" = 30'-0"
Project No. : 16-46
Date : July 21, 2020

Sheet Number :
A1.1

C:\Users\joel\Documents\16-46 Kirkland 24_CENTRALx_joel@tca-inc.com.rvt

Provided to Builders Exchange of WA, Inc. For usage Conditions Agreement see www.bxwa.com - Always Verify Scal

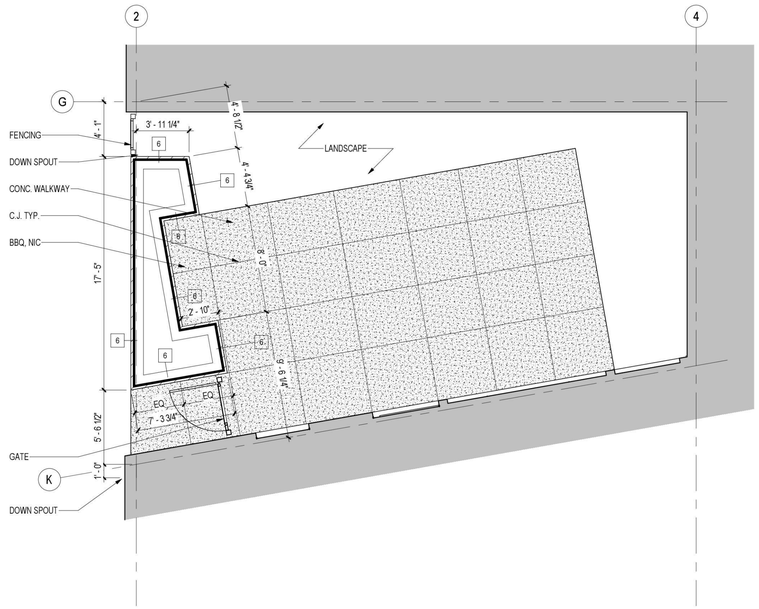

1 COURTYARD ENLARGED

Scale: 3/16" = 1'-0"

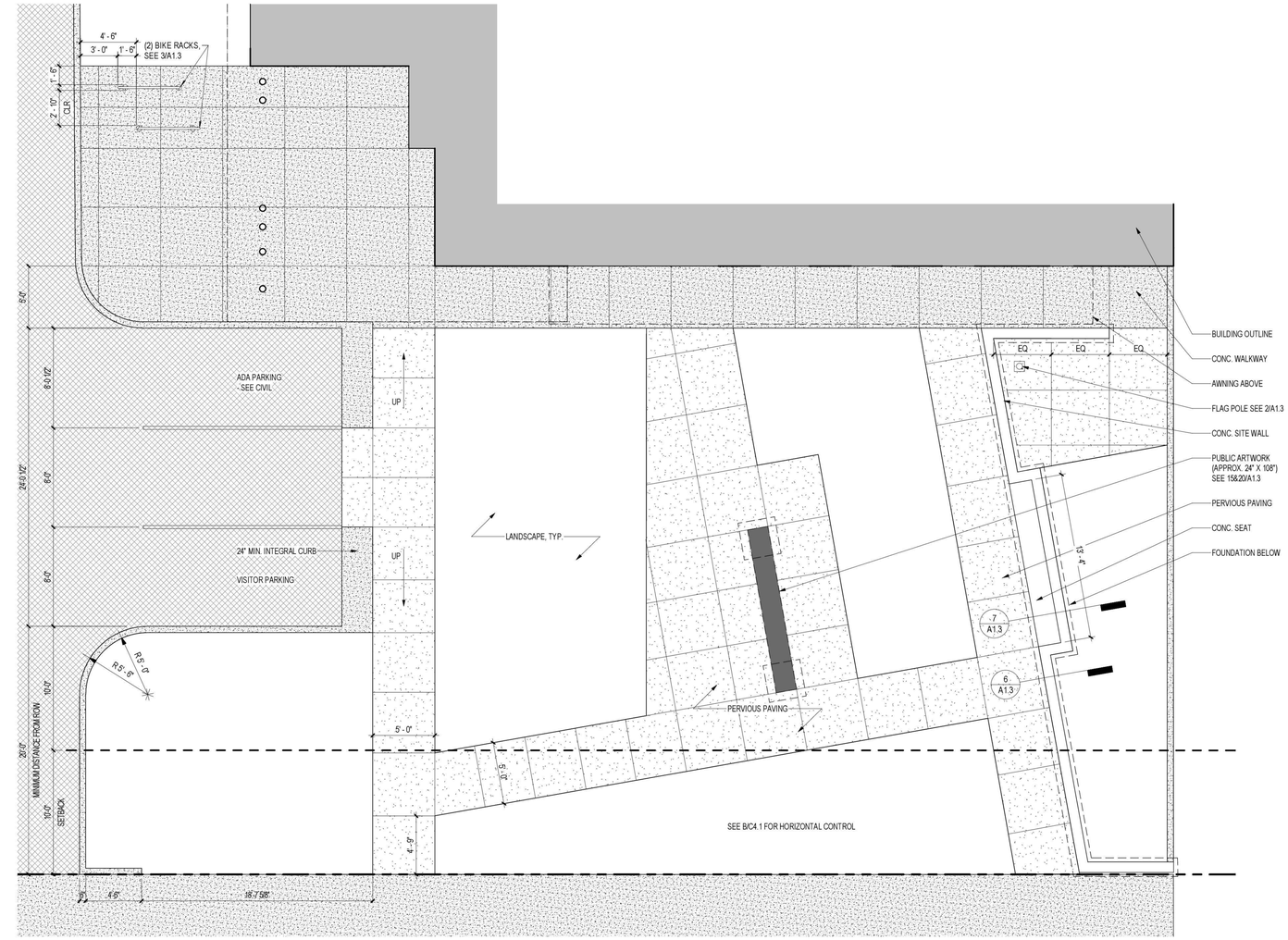

3 SITE PLAN - PLAZA LAYOUT

Scale: 3/16" = 1'-0"

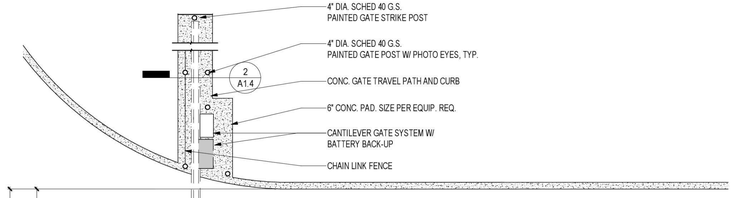

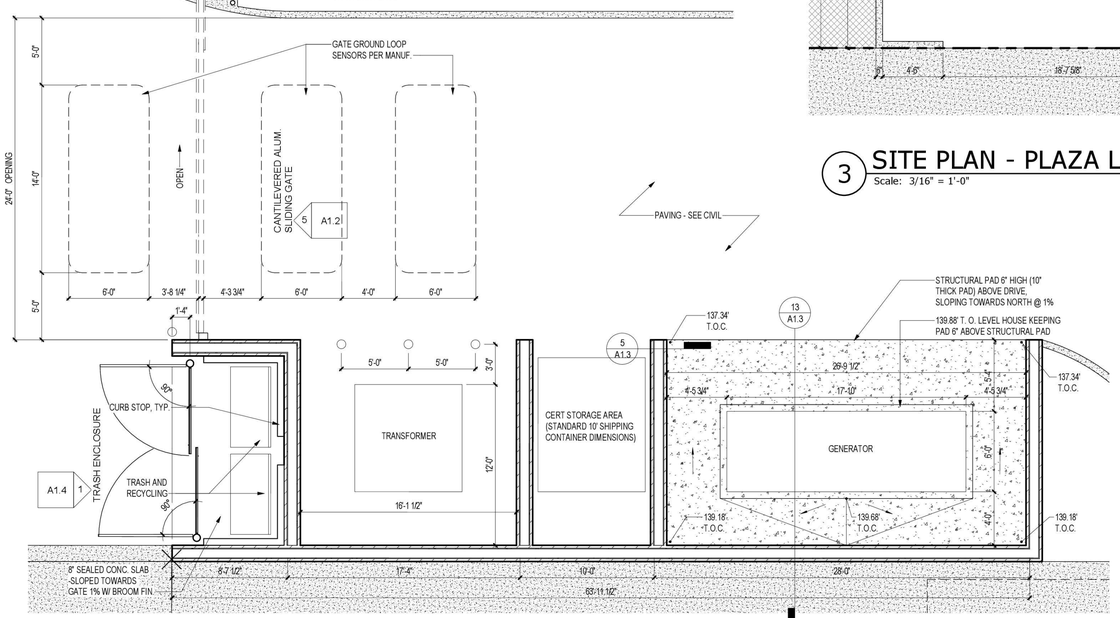

2 GATE, TRASH, TRANSFORMER, CERT, AND GENERATOR

Scale: 3/16" = 1'-0"

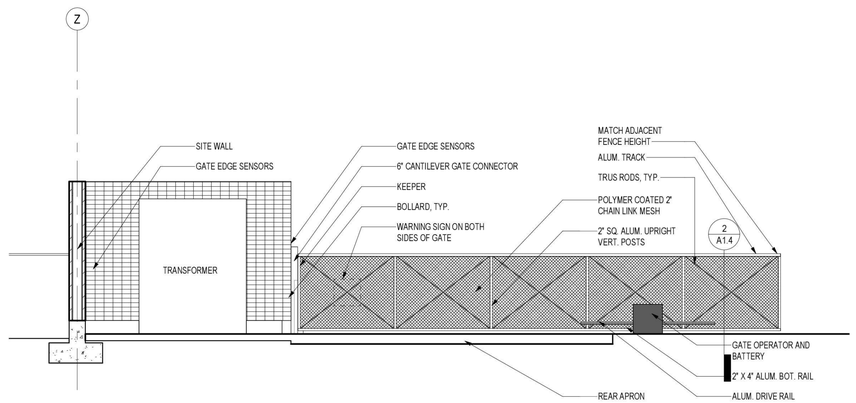

5 CANTILEVERED ALUM. SLIDING GATE

Scale: 3/16" = 1'-0"

TCA

ARCHITECTURE + PLANNING + DESIGN

6211 ROOSEVELT WAY NORTHEAST
SEATTLE, WA 98115
tel: (206) 522-3830
fax: (206) 522-2456

6235 REGISTERED ARCHITECT

BRIAN J. HARRIS
STATE OF WASHINGTON

July 21, 2020

BID SET

No.	Description	Date:

Project Title:

Fire Station 24

City of Kirkland
Kirkland, Washington

Sheet Title:

ENLARGED SITE PLANS

Scale: 3/16" = 1'-0"

Project No. : 16-46

Date : July 21, 2020

Sheet Number :

A1.2

C:\Users\joel\Documents\16-46 Kirkland 24_CENTRALx_joel@tca-inc.com.rvt

Provided to Builders Exchange of WA, Inc. For usage Conditions Agreement see www.bxwa.com - Always Verify Scal

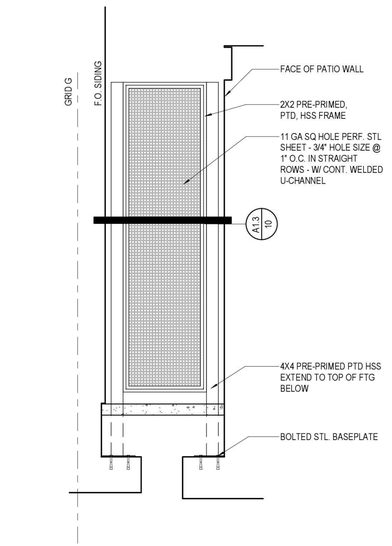

17 FENCE ELEVATION
Scale: 1/2" = 1'-0"

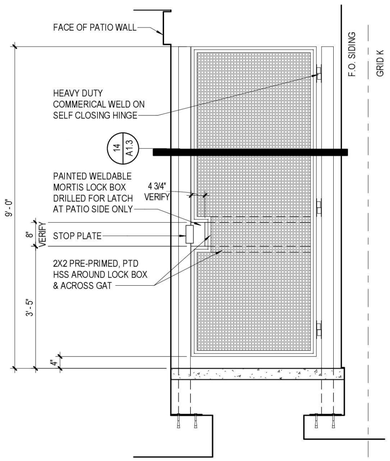

19 GATE ELEVATION
Scale: 1/2" = 1'-0"

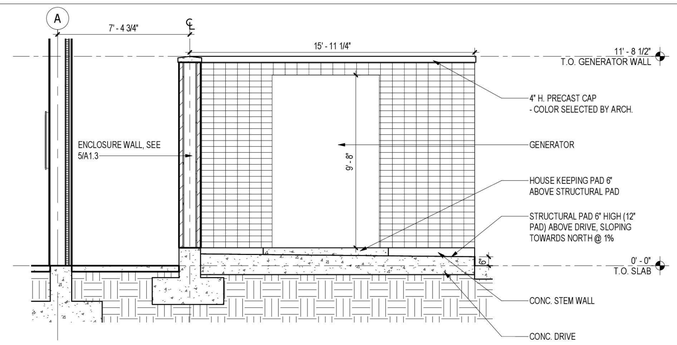

13 GENERATOR SECTION
Scale: 1/4" = 1'-0"

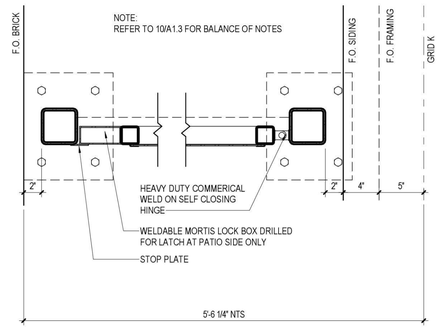

14 GATE PLAN
Scale: 1 1/2" = 1'-0"

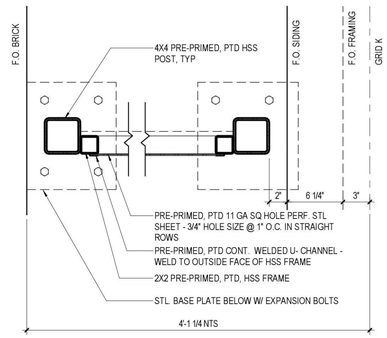

10 FENCE PLAN
Scale: 1 1/2" = 1'-0"

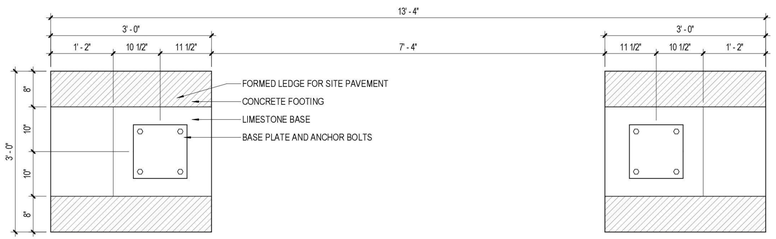

15 SCULPTURE FOUNDATION - PLAN
Scale: 3/4" = 1'-0"

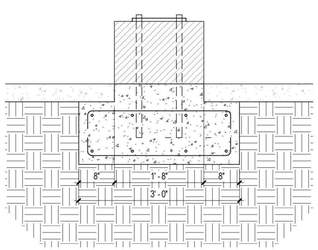

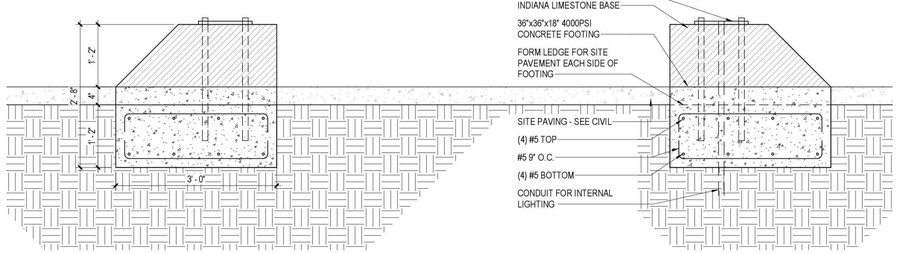

20 SCULPTURE FOUNDATION - ELEVATION
Scale: 3/4" = 1'-0"

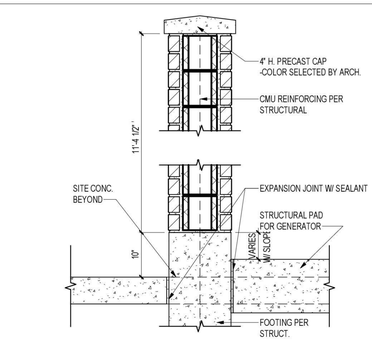

5 ENCLOSURE WALL
Scale: 3/4" = 1'-0"

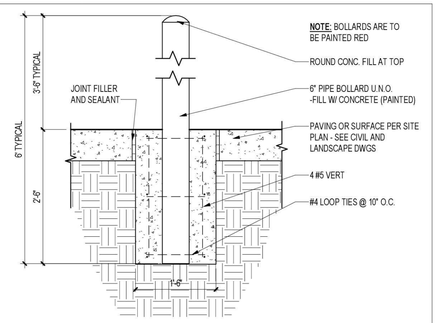

1 BOLLARD
Scale: 3/4" = 1'-0"

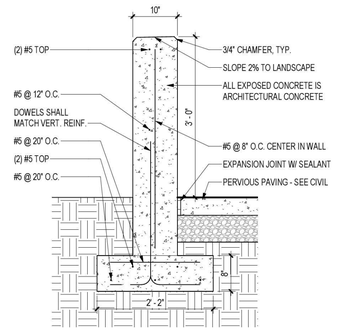

6 CONCRETE SITE WALL
Scale: 3/4" = 1'-0"

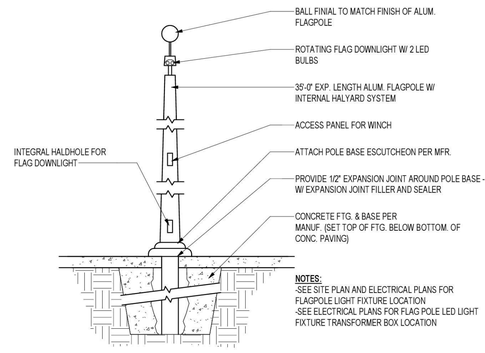

2 FLAG POLE
Scale: NTS

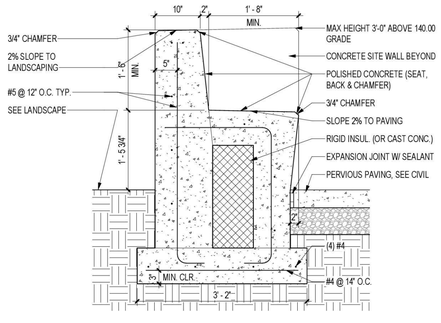

7 CONCRETE BENCH
Scale: 3/4" = 1'-0"

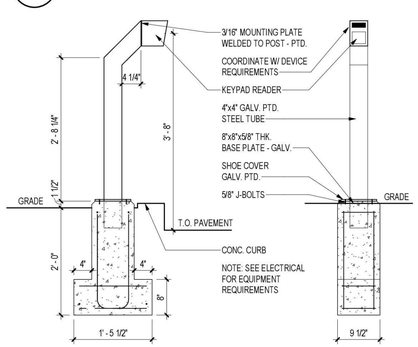

8 GATE KEYPAD/CARDREADER
Scale: 3/4" = 1'-0"

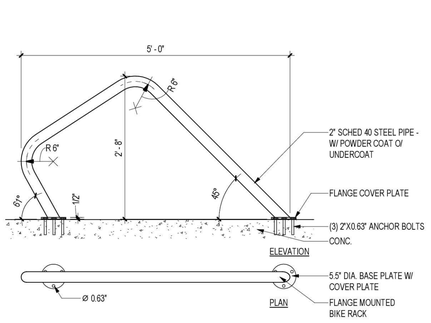

3 BIKE RACK
Scale: 3/4" = 1'-0"

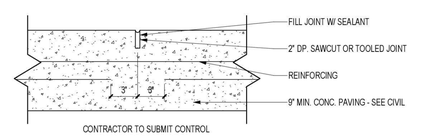

4 CONC. CONTROL JOINT
Scale: 1 1/2" = 1'-0"

TCA
ARCHITECTURE + PLANNING + DESIGN
6211 ROOSEVELT WAY NORTHEAST
SEATTLE, WA 98115
tel: (206) 522-3830
fax: (206) 522-2456

6235 REGISTERED ARCHITECT
BRIAN J. HARRIS
STATE OF WASHINGTON

July 21, 2020

BID SET

No.	Description	Date:

Project Title:

Fire Station 24

City of Kirkland
Kirkland, Washington

Sheet Title:

SITE DETAILS

Scale: As indicated
Project No. : 16-46
Date : July 21, 2020

Sheet Number :

A1.3

C:\Users\joel\Documents\16-46 Kirkland 24_CENTRAL\x_joel@tca-inc.com.rvt

Provided to Builders Exchange of WA, Inc. For usage Conditions Agreement see www.bxwa.com - Always Verify Scal

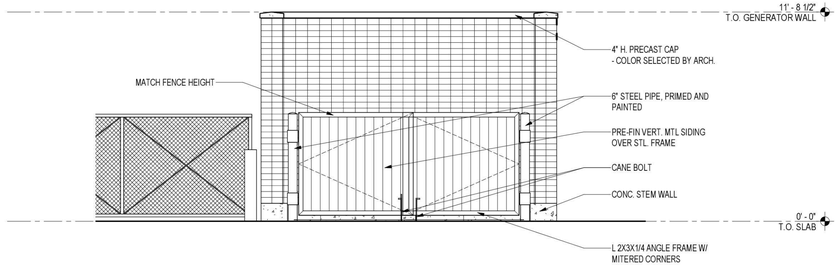

1 TRASH ENCLOSURE

Scale: 1/4" = 1'-0"

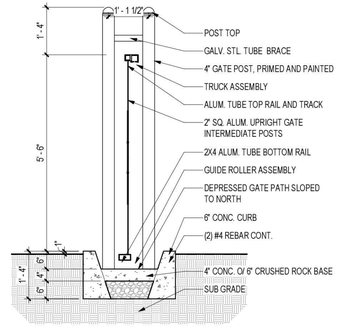

2 CANTILEVER GATE SECTION

Scale: 1/2" = 1'-0"

TCA
ARCHITECTURE + PLANNING + DESIGN
6211 ROOSEVELT WAY
NORTHEAST
SEATTLE, WA 98115
tel: (206) 522-3830
fax: (206) 522-2456

6235 REGISTERED ARCHITECT
BRIAN J. HARRIS
STATE OF WASHINGTON

July 21, 2020

BID SET

No.	Description	Date:

Project Title:

Fire Station 24
City of Kirkland
Kirkland, Washington

Sheet Title:

SITE DETAILS

Scale: **As indicated**
Project No. : **16-46**
Date : **July 21, 2020**

Sheet Number :

A1.4

C:\Users\joel\Documents\16-46 Kirkland 24_CENTRALx_joel@tca-inc.com.rvt

Provided to Builders Exchange of WA, Inc. For usage Conditions Agreement see www.bxwa.com - Always Verify Scal

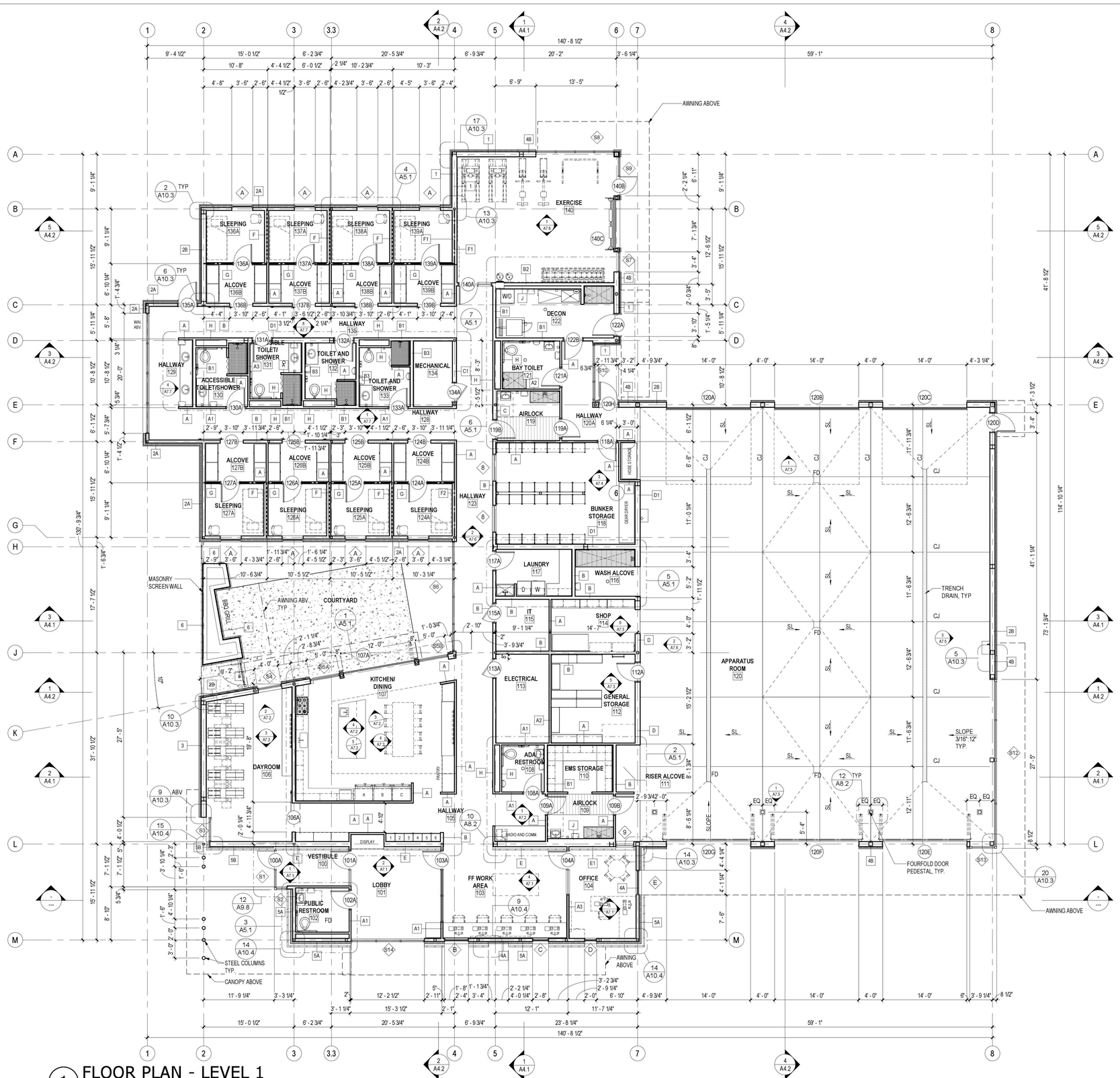

1 FLOOR PLAN - LEVEL 1
Scale: 1/8" = 1'-0"

0 4' 8' 16'
1/8" = 1'

LEGEND

1/2 HR SEPARATION - CONT. TO UNDERSIDE OF FLOOR/ ROOF ASSEMBLY

1 HR SEPARATION - CONT. TO UNDERSIDE OF ROOF/ FLOOR ASSEMBLY

GENERAL NOTES

1. SEE INTERIOR ELEV. FOR GROMMETS IN CASEWORK
2. PROVIDE DEPRESSED SLAB AT WASH ALCOVE AND SHOWERS TYP. (SEE STRUCT. FOUNDATION PLANS FOR SLAB THICKNESS)
3. COORDINATE AND PROVIDE BACKING AND BLK'G REQ'D FOR CABINETS, GRAB BARS, HANDRAILS, MARKER BOARDS, TACK BOARDS, SHELVING AND OTHER EQUIPMENT AND HARDWARE PRIOR TO INSTALLING G.W.B. - CONT. X 6" 16 GA. FLAT STRAP W/ 2X6 MIN WOOD BLK'G REQUIRED AT ALL GRAB BARS AND HANDRAIL LOCATIONS. CONT. X 8" 16 GA. FLAT STRAP BACKING OK AT ALL OTHER LOCATIONS
4. PROVIDE WALL TO WALL SLOPED FLOORS AT TRENCH DRAINS AT APPARATUS BAYS.
5. PROVIDE BLOCK OUTS AT EXTERIOR DOORS AND APPARATUS BAY DOORS TO POUR SLAB THROUGH OPENING WITH A SINGLE EXPANSION JOINT AS INDICATED
6. WHERE CONTROL JOINTS TERMINATE AT AN INTERSECTING JOINT, HOLD SHORT AND FINISH WITH HAND SAW. OVERLAPPING SAW CUTS ARE NOT ALLOWED
7. PROVIDE CURB PER 7/A8.2 AT LOCATIONS WHERE MULTIPLE CONDUIT PENETRATE SLAB
8. ALL DIMENSIONS & GRID LINES ARE FROM FACE OF BRICK/BLOCK, CENTERLINE OF COLUMNS AND STUDS, UNLESS SHOWN OTHERWISE. CONTRACTOR TO VERIFY ALL EXISTING DIMENSIONS & CONDITIONS IN THE FIELD BEFORE PROCEEDING WITH THE WORK.
9. SEE ENLARGED PLANS ON A5.1 & A5.2 FOR DIMENSIONS.
10. SEE A9.1 FOR EXTERIOR ENVELOPE TYPES
11. REFER TO 12/A10.1 FOR VAPOR BARRIER PENETRATION DETAILS

TCA
ARCHITECTURE + PLANNING + DESIGN
6211 ROOSEVELT WAY NORTHEAST
SEATTLE, WA 98115
tel: (206) 522-3830
fax: (206) 522-2456

6235 REGISTERED ARCHITECT
BRIAN J. HARRIS
STATE OF WASHINGTON

July 21, 2020

BID SET

No.	Description	Date:

Project Title:

Fire Station 24
City of Kirkland
Kirkland, Washington

Sheet Title:

FLOOR PLAN

Scale: 1/8" = 1'-0"
Project No. : 16-46
Date : July 21, 2020

Sheet Number :

A2.1

C:\Users\joel\Documents\16-46 Kirkland 24_CENTRALx_joel@tca-inc.com.rvt

Provided to Builders Exchange of WA, Inc. For usage Conditions Agreement see www.bxwa.com - Always Verify Scal

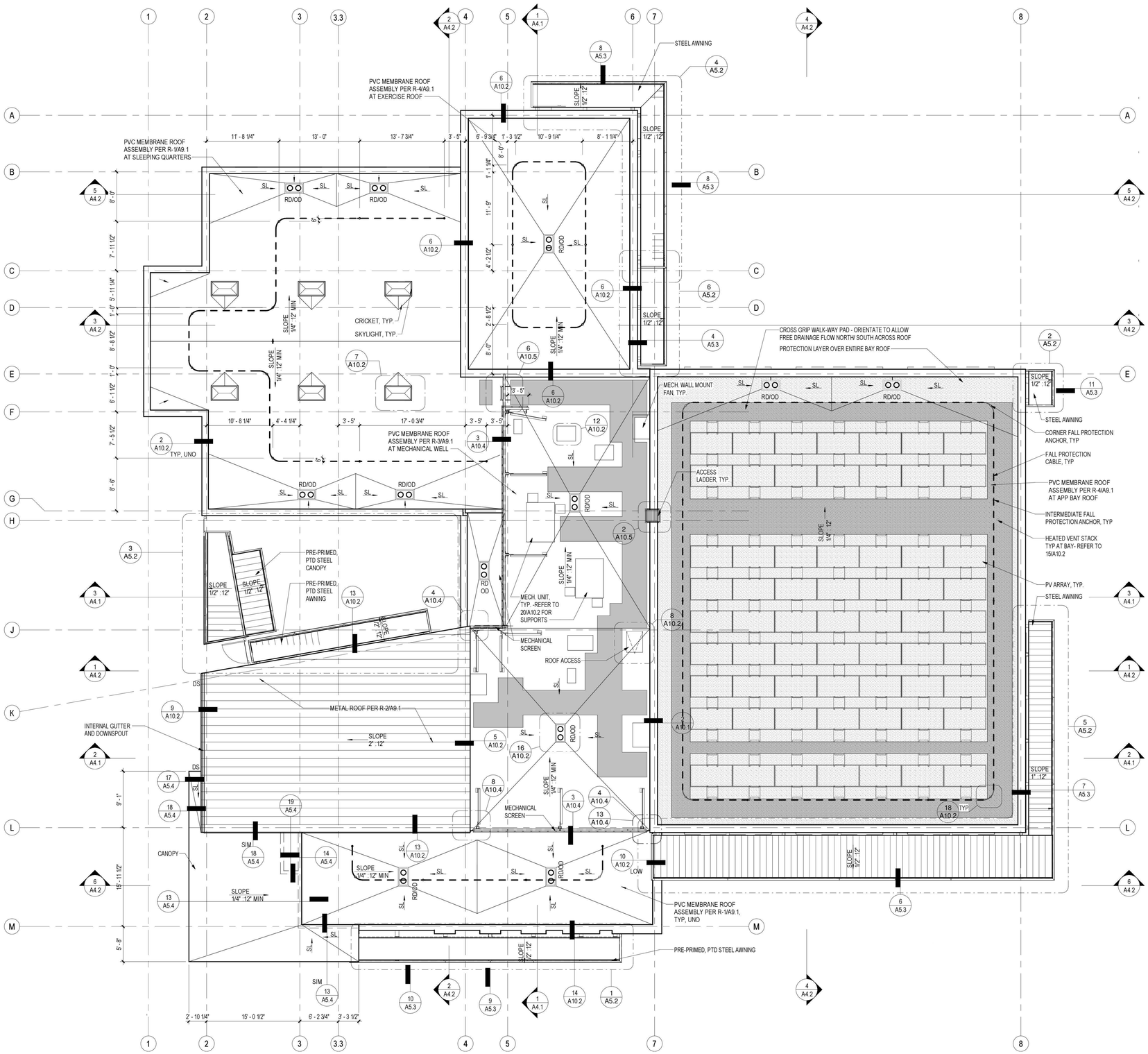

1 ROOF PLAN
Scale: 1/8" = 1'-0"

GENERAL NOTES

1. VERIFY LOCATION OF ROOF PENETRATION W/ MECHANICAL & PLUMBING DRAWINGS.
2. PROVIDE CRICKETS SLOPED AT 1/2":12" AT ROOF PENETRATIONS.
3. ALL ROOF PENETRATIONS TO BE STUBBED THROUGH ROOF DECK PRIOR TO INSTALLATION OF VAPOR BARRIERS, SEE DETAILS ON A10.2
4. ALL CURBS TO BE SIZED TO MATCH EQUIPMENT.
5. PROVIDE DRAIN MTL SCREENS AT ALL DOWNSPOUTS.
6. SEE DETAIL 11, 15/A10.2 FOR VENT STACK FLASHING.
7. FALL RESTRAINT LOCATIONS ARE APPROXIMATE, CONTRACTOR TO VERIFY ALL LOCATIONS AND SUBMIT ANCHOR LAYOUT PRIOR TO INSTALLATION OF SYSTEM. REFER TO STRUCTURAL DETAILS FOR ATTACHMENT, INCLUDING ADDITIONAL FRAMING REQUIREMENTS AT EACH ANCHOR POST, SEE 18/A10.2.
8. PROVIDE SADDLE FLASHING TYPICAL AT COPING CAP CONDITIONS PERPENDICULAR TO ADJACENT WALLS. SEE 6/A10.1
9. AT ALL ROOFS SERVED BY ROOF DRAIN/ OVERFLOW DRAINS: PROVIDE TAPERED INSULATION WITH MIN. 1/4". 12" SLOPE TO ALLOW FOR CONTINUOUS & CONSISTENT SLOPE TO ROOF DRAIN/ OVERFLOW DRAIN SUMP PANS, SEE 16/A10.2.
10. FALL PROTECTION ANCHORS SHALL BE CENTERED BETWEEN ROOF JOISTS - REFER TO DETAIL 10/S5.4.

TCA
ARCHITECTURE + PLANNING + DESIGN
6211 ROOSEVELT WAY NORTHEAST
SEATTLE, WA 98115
tel: (206) 522-3830
fax: (206) 522-2456

6235 REGISTERED ARCHITECT
BRIAN J. HARRIS
STATE OF WASHINGTON

July 21, 2020

BID SET

No.	Description	Date:

Project Title:

Fire Station 24
City of Kirkland
Kirkland, Washington

Sheet Title:

ROOF PLAN

Scale: 1/8" = 1'-0"
Project No. : 16-46
Date : July 21, 2020

Sheet Number :

A2.2

0 4' 8' 16'
1/8" = 1'

C:\Users\michelle\Documents\16-46 Kirkland 24_CENTRAL_R19 0721_michelle@tca-inc.com.rvt

Provided to Builders Exchange of WA, Inc. For usage Conditions Agreement see www.bxwa.com - Always Verify Scal

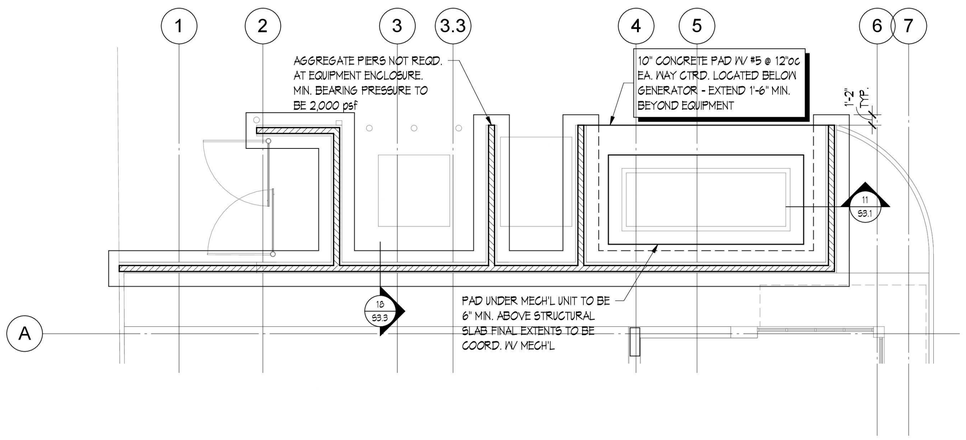

2 EQUIPMENT ENCLOSURE
1/8" = 1'-0"

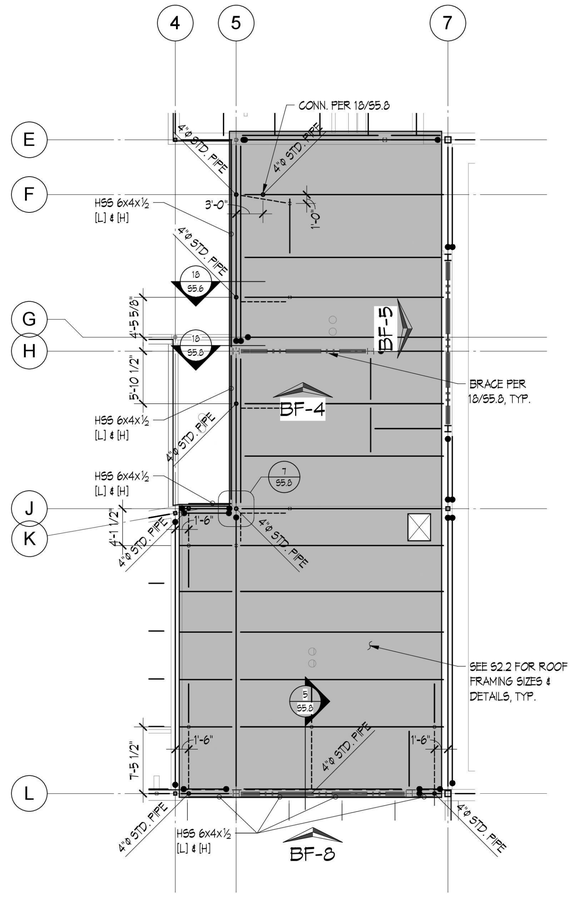

1 MECH'L PARTIAL PLAN
1/8" = 1'-0"

COUGHLIN
PORTER
LUNDEEN

801 SECOND AVENUE, SUITE 900
SEATTLE, WA 98104

(206) 343-0460 www.cplinc.com

MICHAEL A ARMSTRONG
STATE OF WASHINGTON
37839
STRUCTURAL ENGINEER
PROFESSIONAL ENGINEER
07/20/20

BID SET

No.	Description	Date:

Project Title:

Fire Station 24

City of Kirkland
Kirkland, Washington

Sheet Title:

EQUIPMENT ENCLOSURE & MECH'L SCREEN PLAN

Scale: 1/8" = 1'-0"
Project No. : S19-0211-03
Date : 12/02/19

Sheet Number :

S2.3

C:\Revit Local\2019\KFS24_Structural_nicks9LRV7.rvt

Provided to Builders Exchange of WA, Inc. For usage Conditions Agreement see www.bxwa.com - Always Verify Scal

GENERAL NOTES

1. HORIZ. JOINTS IN METAL PANELS ARE NOT PERMITTED EXCEPT WHERE SHOWN ON ELEVATIONS.
2. MECHANICAL, ELECTRICAL AND PLUMBING EQUIPMENT AND FIXTURES ARE SHOWN FOR REFERENCE ONLY. QUANTITIES AND LOCATIONS SHALL BE VERIFIED WITH MECHANICAL, ELECTRICAL AND PLUMBING DRAWINGS.
3. ALL PLUMBING AND ELECTRICAL WALL PENETRATIONS SHALL BE FLASHED ACCORDING TO DETAIL 13/A10.1 UNLESS NOTED OTHERWISE.
4. ALL PLUMBING AND ELECTRICAL FIXTURES LOCATED ON HPL PANELS SHALL BE FLUSH MOUNT.
5. ALL PLUMBING AND ELECTRICAL FIXTURE LOCATED ON METAL SIDING SHALL BE PROVIDED WITH A SHEET METAL TRIM PER DETAIL 14/A10.1
6. ALL EXTERIOR STEEL IS ARCHITECTURAL EXPOSED STRUCTURAL STEEL (AESS).
7. ALL EXTERIOR STEEL IS PRE-PRIMED AND PAINTED UNLESS NOTED OTHERWISE.

LEGEND	
Key Value	Keynote Text
AWN-01	PRE-PRIMED, PTD METAL AWNING
BR-01	SHINER STACK BRICK VENEER
BR-02	SHINER STACK BRICK VENEER
BR-03	SHINER STACK BRICK MASONRY WALL
CAN-01	CANOPY
CAN-02	PRE-PRIMED, PTD. METAL CANOPY
DR-01	HOLLOW METAL DOOR AND FRAME - PRE-PRIMED, PTD
DR-02	THERMALLY BROKEN OVERHEAD DOOR
DR-03	ALUMINUM OVERHEAD DOOR
DR-04	FOURFOLD DOOR
DR-05	ALUMINUM FOLDING DOOR SYSTEM
FG-01	FIBERGLASS STOREFRONT W/ THERMALLY BROKEN ALUMINUM STOREFRONT DOOR
FG-02	FIBERGLASS STOREFRONT
FG-03	FIBERGLASS WINDOW
HPL-01	SOLID PHENOLIC (HPL) WALL PANEL
HPL-02	SOLID PHENOLIC (HPL) WALL PANEL
LV-01	MECHANICAL LOUVER - PRE-FINISH TO MATCH SIDING (REFER TO DETAILS 17, 18 & 19/A10.4)
MTL-01	HORIZONTAL BOX RIB METAL WALL PANEL
MTL-02	VERTICAL STANDING METAL SEAM WALL PANEL
MTL-03A	VERTICAL BOX RIB METAL WALL PANEL
MTL-03B	VERTICAL BOX RIB METAL WALL PANEL
MTL-04	PERFORATED HORIZONTAL FLUSH METAL WALL PANEL
MTL-05	BOX RIB METAL ROOF PANEL
MTL-06	STANDING SEAM METAL ROOF PANEL
P-01	PRE-PRIMED, PTD METAL POST
SM-01	SHEET METAL COPING TO MATCH SIDING

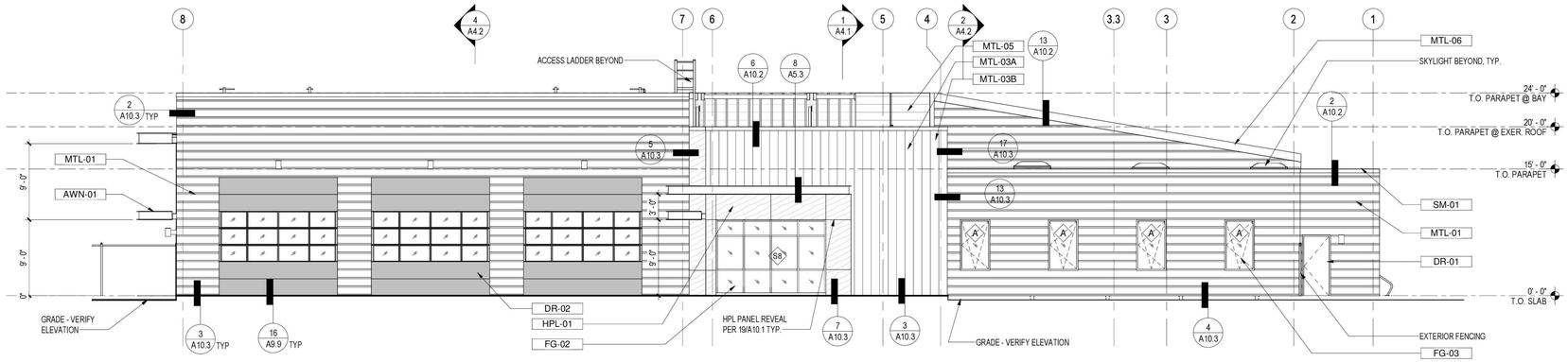

1 EXTERIOR ELEVATION NORTH

Scale: 1/8" = 1'-0"

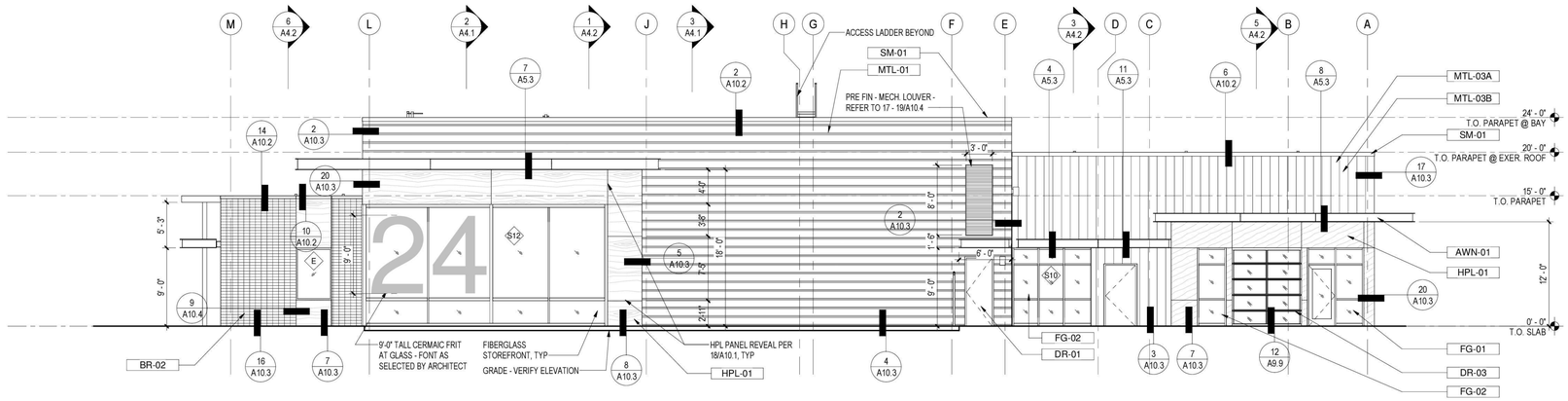

2 EXTERIOR ELEVATION EAST

Scale: 1/8" = 1'-0"

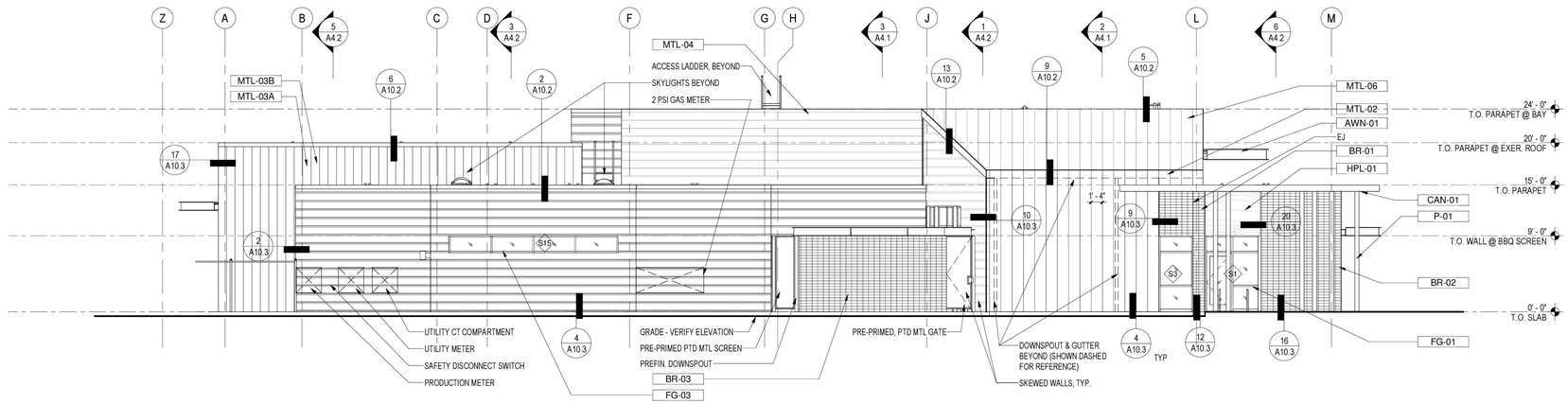

3 EXTERIOR ELEVATION WEST

Scale: 1/8" = 1'-0"

TCA
ARCHITECTURE + PLANNING + DESIGN
6211 ROOSEVELT WAY NORTHEAST
SEATTLE, WA 98115
tel: (206) 522-3830
fax: (206) 522-2456
6235 REGISTERED ARCHITECT
BRIAN J. HARRIS
STATE OF WASHINGTON

July 21, 2020

BID SET

No.	Description	Date:

Project Title:

Fire Station 24

City of Kirkland
Kirkland, Washington

Sheet Title:

ELEVATIONS

Scale: 1/8" = 1'-0"
Project No. : 16-46
Date : July 21, 2020

Sheet Number :

A3.1

C:\Users\michelle\Documents\16-46 Kirkland 24_CENTRAL_R19 0721_michelle@tca-inc.com.rvt

Provided to Builders Exchange of WA, Inc. For usage Conditions Agreement see www.bxwa.com - Always Verify Scal

GENERAL NOTES

1. HORIZ. JOINTS IN METAL PANELS ARE NOT PERMITTED EXCEPT WHERE SHOWN ON ELEVATIONS.
2. MECHANICAL, ELECTRICAL AND PLUMBING EQUIPMENT AND FIXTURES ARE SHOWN FOR REFERENCE ONLY. QUANTITIES AND LOCATIONS SHALL BE VERIFIED WITH MECHANICAL, ELECTRICAL AND PLUMBING DRAWINGS.
3. ALL PLUMBING AND ELECTRICAL WALL PENETRATIONS SHALL BE FLASHED ACCORDING TO DETAIL 13/A10.1 UNLESS NOTED OTHERWISE.
4. ALL PLUMBING AND ELECTRICAL FIXTURES LOCATED ON HPL PANELS SHALL BE FLUSH MOUNT.
5. ALL PLUMBING AND ELECTRICAL FIXTURE LOCATED ON METAL SIDING SHALL BE PROVIDED WITH A SHEET METAL TRIM PER DETAIL 14/A10.1
6. ALL EXTERIOR STEEL IS ARCHITECTURAL EXPOSED STRUCTURAL STEEL (AESS).
7. ALL EXTERIOR STEEL IS PRE-PRIMED AND PAINTED UNLESS NOTED OTHERWISE.

LEGEND	
Key Value	Keynote Text
AWN-01	PRE-PRIMED, PTD METAL AWNING
BR-01	SHINER STACK BRICK VENEER
BR-02	SHINER STACK BRICK VENEER
BR-03	SHINER STACK BRICK MASONRY WALL
CAN-01	CANOPY
CAN-02	PRE-PRIMED, PTD. METAL CANOPY
DR-01	HOLLOW METAL DOOR AND FRAME - PRE-PRIMED, PTD
DR-02	THERMALLY BROKEN OVERHEAD DOOR
DR-03	ALUMINUM OVERHEAD DOOR
DR-04	FOURFOLD DOOR
DR-05	ALUMINUM FOLDING DOOR SYSTEM
FG-01	FIBERGLASS STOREFRONT W/ THERMALLY BROKEN ALUMINUM STOREFRONT DOOR
FG-02	FIBERGLASS STOREFRONT
FG-03	FIBERGLASS WINDOW
HPL-01	SOLID PHENOLIC (HPL) WALL PANEL
HPL-02	SOLID PHENOLIC (HPL) WALL PANEL
LV-01	MECHANICAL LOUVER - PRE-FINISH TO MATCH SIDING (REFER TO DETAILS 17, 18 & 19/A10.4)
MTL-01	HORIZONTAL BOX RIB METAL WALL PANEL
MTL-02	VERTICAL STANDING METAL SEAM WALL PANEL
MTL-03A	VERTICAL BOX RIB METAL WALL PANEL
MTL-03B	VERTICAL BOX RIB METAL WALL PANEL
MTL-04	PERFORATED HORIZONTAL FLUSH METAL WALL PANEL
MTL-05	BOX RIB METAL ROOF PANEL
MTL-06	STANDING SEAM METAL ROOF PANEL
P-01	PRE-PRIMED, PTD METAL POST
SM-01	SHEET METAL COPING TO MATCH SIDING

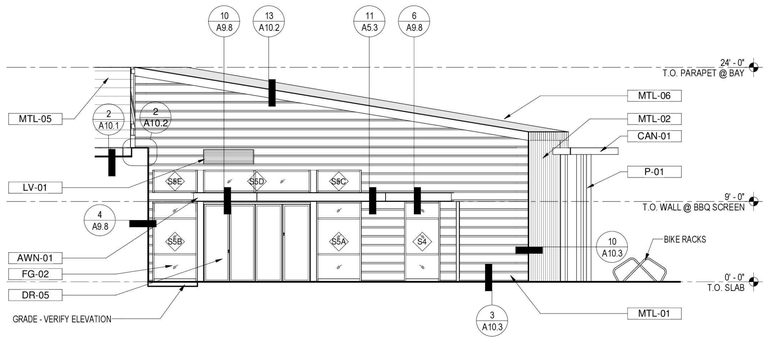

1 NORTH ELEV. @ COURTYARD
Scale: 1/8" = 1'-0"

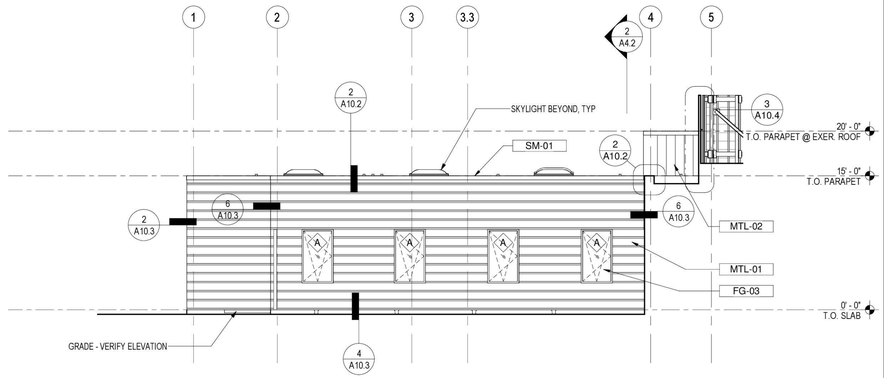

2 SOUTH ELEV. @ COURTYARD
Scale: 1/8" = 1'-0"

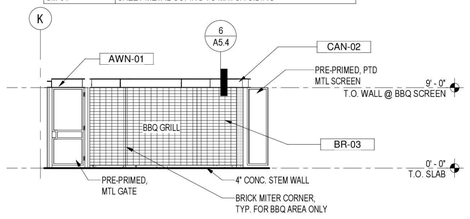

3 EAST ELEV. @ COURTYARD
Scale: 1/8" = 1'-0"

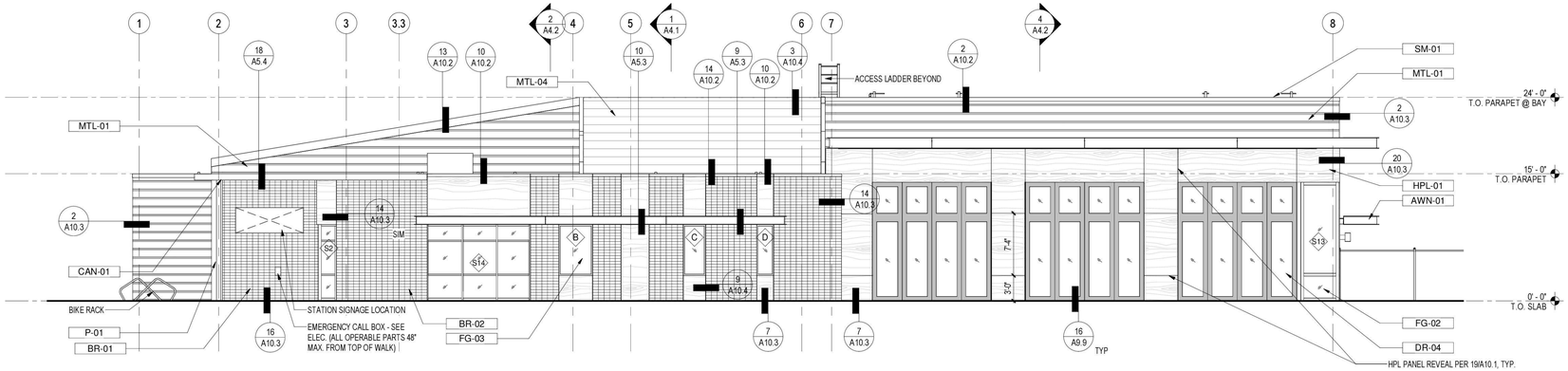

4 EXTERIOR ELEVATION SOUTH
Scale: 1/8" = 1'-0"

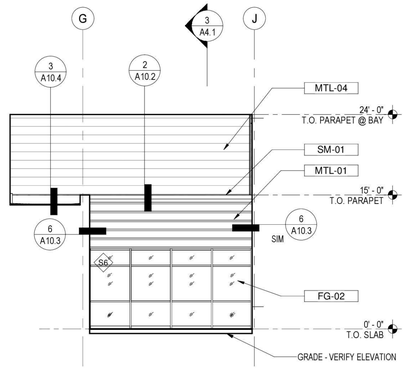

5 WEST ELEV. @ COURTYARD
Scale: 1/8" = 1'-0"

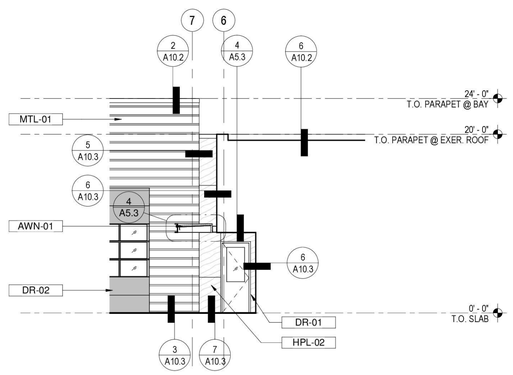

6 NORTH ELEV. @ F.F. ENTRANCE
Scale: 1/8" = 1'-0"

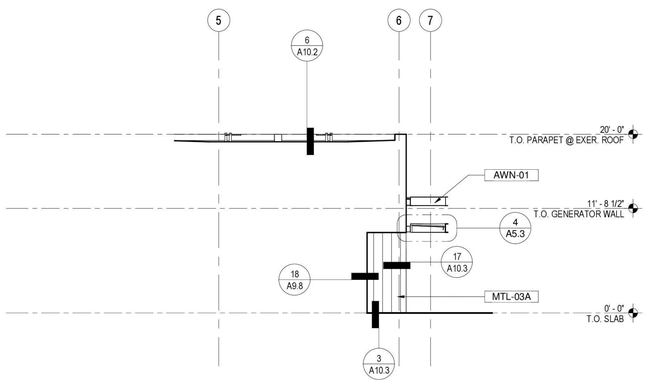

7 SOUTH ELEV. @ F.F. ENTRANCE
Scale: 1/8" = 1'-0"

TCA
ARCHITECTURE + PLANNING + DESIGN
6211 ROOSEVELT WAY NORTHEAST
SEATTLE, WA 98115
tel: (206) 522-3830
fax: (206) 522-2456

6235 REGISTERED ARCHITECT
BRIAN J. HARRIS
STATE OF WASHINGTON

July 21, 2020

BID SET

No.	Description	Date:

Project Title:

Fire Station 24
City of Kirkland
Kirkland, Washington

Sheet Title:

ELEVATIONS

Scale: 1/8" = 1'-0"
Project No. : 16-46
Date : July 21, 2020

Sheet Number :

A3.2

C:\Users\michelle\Documents\16-46 Kirkland 24_CENTRAL_R19 0721_michelle@tca-inc.com.rvt

Provided to Builders Exchange of WA, Inc. For usage Conditions Agreement see www.bxwa.com - Always Verify Scal

GENERAL NOTES

1. REFER TO A9.1 FOR EXTERIOR ENVELOPE TYPES.
2. REFER TO A9.2 FOR INTERIOR PARTITION TYPES.
3. REFER TO EXTERIOR ELEVATIONS FOR EXTENT OF SIDING TYPES AND ORIENTATION.
4. AIR BARRIER REQUIREMENTS AND COMPLIANCE:
   A. PROVIDE A CONTINUOUS AIR BARRIER COMPLIANT WITH 2015 WSEC C402.5.1.
   B. PROVIDE AIR BARRIER COMPLIANCE TESTING AND REPORTS PURSUANT TO 2015 WSEC C402.5.1.2 (BLOWER DOOR TEST). SHOULD LEAKAGE RATES EXCEED CODE LIMITS, PROVIDE INSPECTION, ADDITIONAL SEALING AND REPORTS AS REQUIRED BY 2015 WSEC C402.5.1.2. SUBMIT REPORTS TO THE OWNER AND BUILDING OFFICIAL.
5. REFER TO A2.1 AND A5.1 FOR WALL TYPES NOT SHOWN HERE
6. REFER TO BUILDING SECTIONS FOR HEIGHTS OF APPARATUS BAY RADIANT HEATERS, LIGHT FIXTURES, SOURCE CAPTURE EXHAUST AND CEILING BLADE FANS
7. PV ARRAY AND MECHANICAL EQUIPMENT NOT SHOWN. REFER TO ELEC. AND MECH. DRAWINGS.

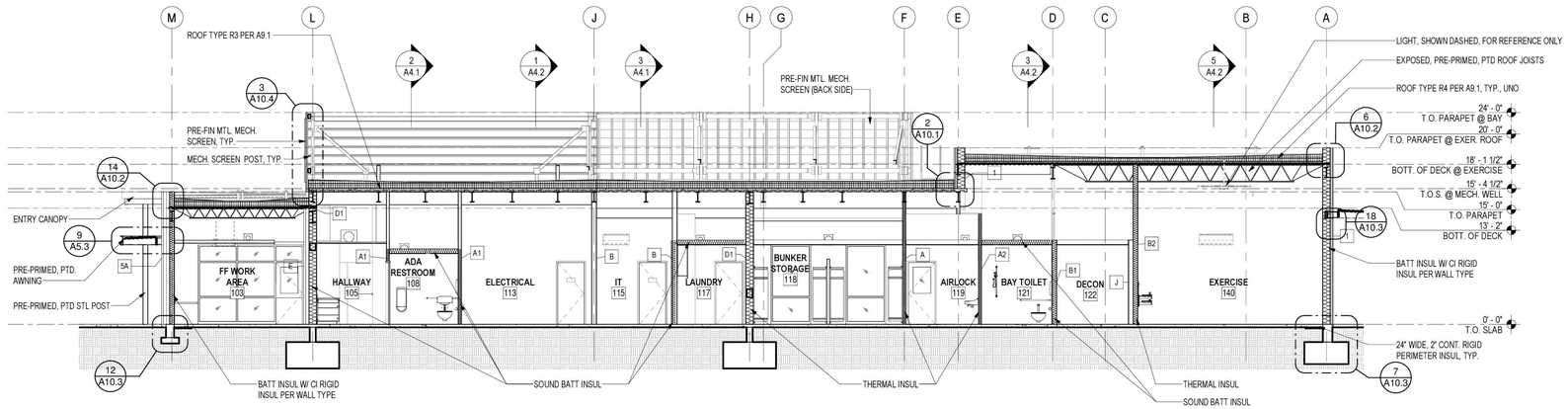

1 NORTH-SOUTH SECTION

Scale: 1/8" = 1'-0"

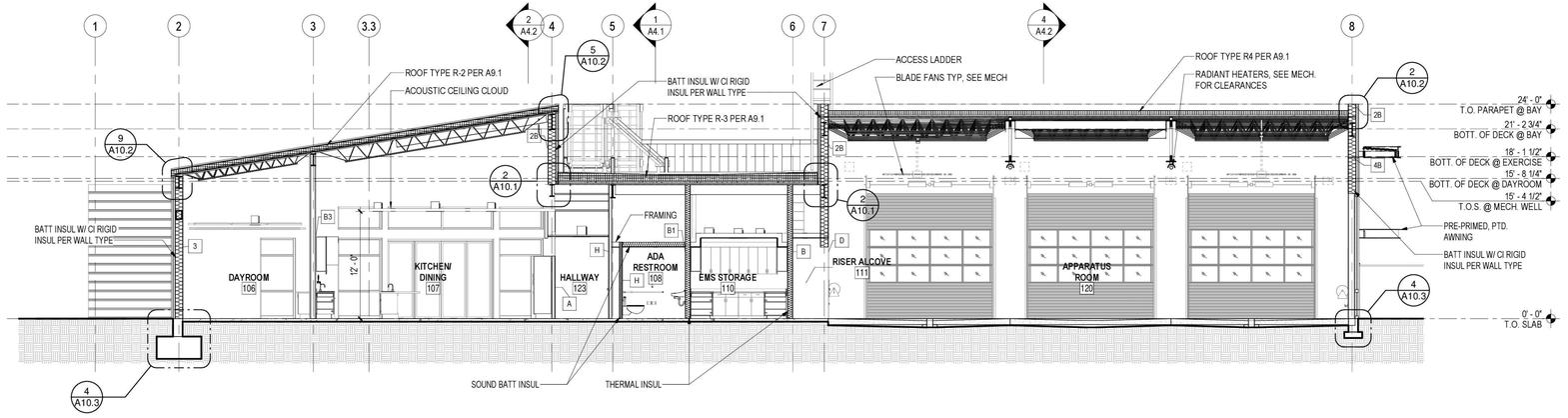

2 EAST-WEST SECTION

Scale: 1/8" = 1'-0"

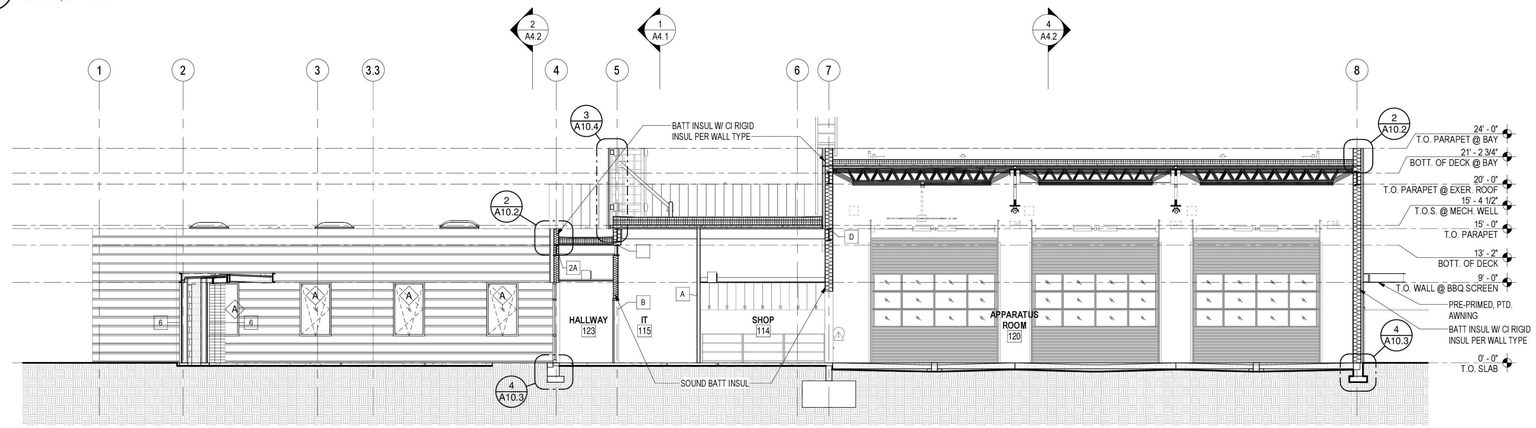

3 EAST-WEST SECTION THROUGH COURTYARD

Scale: 1/8" = 1'-0"

TCA
ARCHITECTURE + PLANNING + DESIGN
6211 ROOSEVELT WAY NORTHEAST
SEATTLE, WA 98115
tel: (206) 522-3830
fax: (206) 522-2456
6235 REGISTERED ARCHITECT
BRIAN J. HARRIS
STATE OF WASHINGTON
July 21, 2020

BID SET

No.	Description	Date:

Project Title:

Fire Station 24

City of Kirkland
Kirkland, Washington

Sheet Title:

BUILDING SECTIONS

Scale: As indicated
Project No. : 16-46
Date : July 21, 2020

Sheet Number :

A4.1

C:\Users\michelle\Documents\16-46 Kirkland 24_CENTRAL_R19 0721_michelle@tca-inc.com.rvt

Provided to Builders Exchange of WA, Inc. For usage Conditions Agreement see www.bxwa.com - Always Verify Scal

GENERAL NOTES

1. REFER TO A9.1 FOR EXTERIOR ENVELOPE TYPES.
2. REFER TO A9.2 FOR INTERIOR PARTITION TYPES.
3. REFER TO EXTERIOR ELEVATIONS FOR EXTENT OF SIDING TYPES AND ORIENTATION.
4. AIR BARRIER REQUIREMENTS AND COMPLIANCE:
   A. PROVIDE A CONTINUOUS AIR BARRIER COMPLIANT WITH 2015 WSEC C402.5.1.
   B. PROVIDE AIR BARRIER COMPLIANCE TESTING AND REPORTS PURSUANT TO 2015 WSEC C402.5.1.2 (BLOWER DOOR TEST). SHOULD LEAKAGE RATES EXCEED CODE LIMITS, PROVIDE INSPECTION, ADDITIONAL SEALING AND REPORTS AS REQUIRED BY 2015 WSEC C402.5.1.2 SUBMIT REPORTS TO THE OWNER AND BUILDING OFFICIAL.
5. REFER TO A2.1 AND A5.1 FOR WALL TYPES NOT SHOWN HERE
6. REFER TO BUILDING SECTIONS FOR HEIGHTS OF APPARATUS BAY RADIANT HEATERS, LIGHT FIXTURES, SOURCE CAPTURE EXHAUST AND CEILING BLADE FANS.
7. PV ARRAY AND MEHCANICAL EQUIPMENT NOT SHOWN. REFER TO ELEC. AND MECH. DRAWINGS

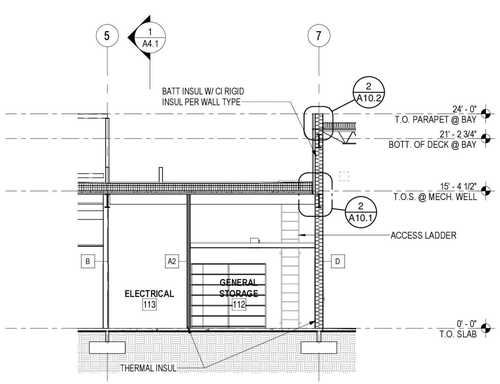

1 EAST-WEST SECTION THROUGH ELECTRICAL

Scale: 1/8" = 1'-0"

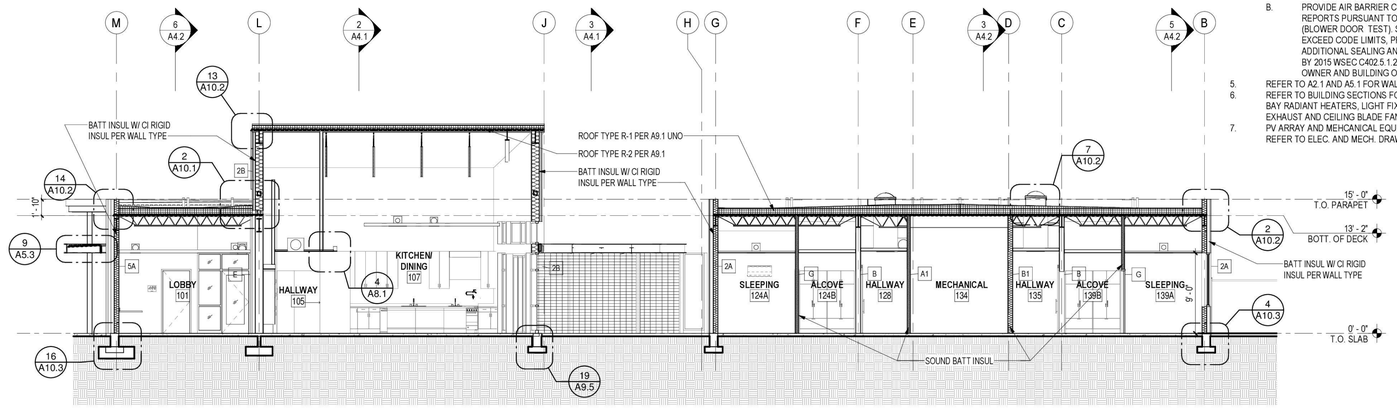

2 NORTH-SOUTH SECTION THROUGH SLEEPING QUARTERS

Scale: 1/8" = 1'-0"

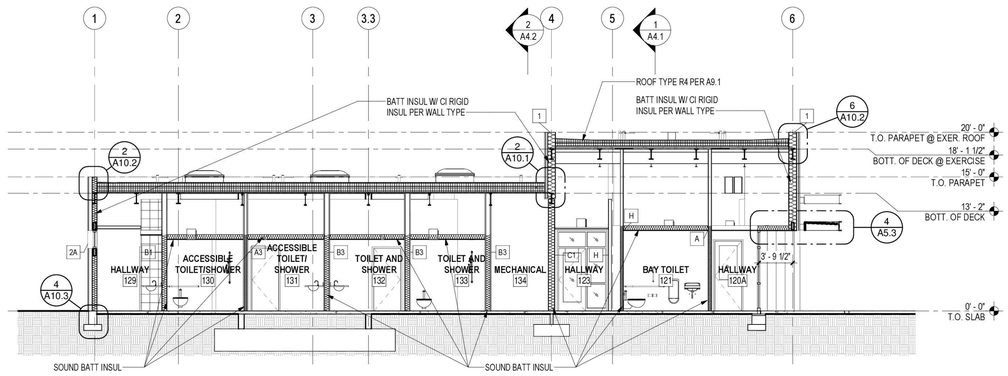

3 EAST-WEST SECTION THROUGH BATHROOMS

Scale: 1/8" = 1'-0"

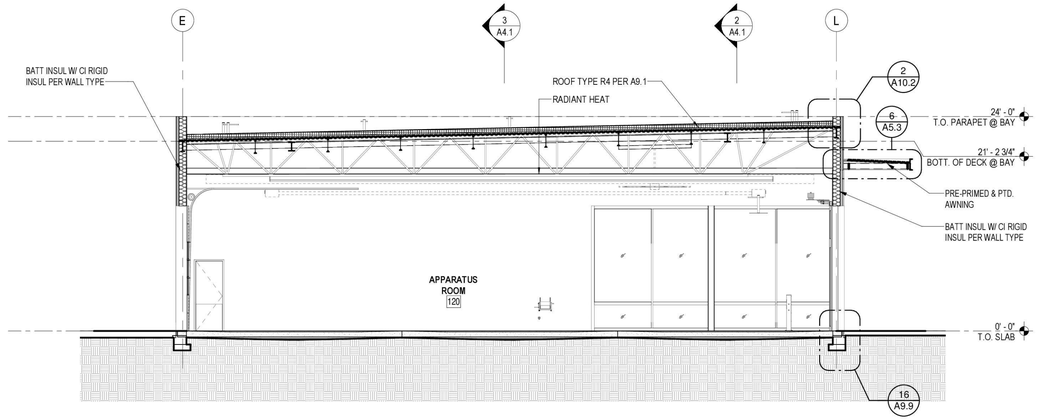

4 NORTH-SOUTH SECTION THROUGH APP BAY

Scale: 1/8" = 1'-0"

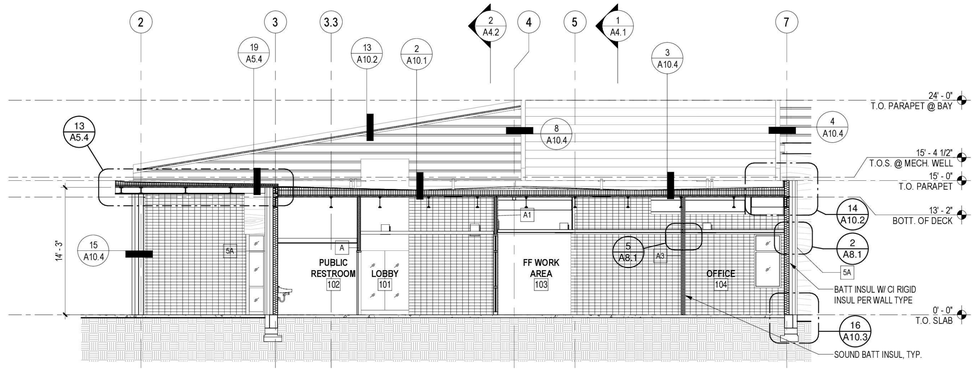

6 EAST-WEST SECTION THRU LOBBY

Scale: 1/8" = 1'-0"

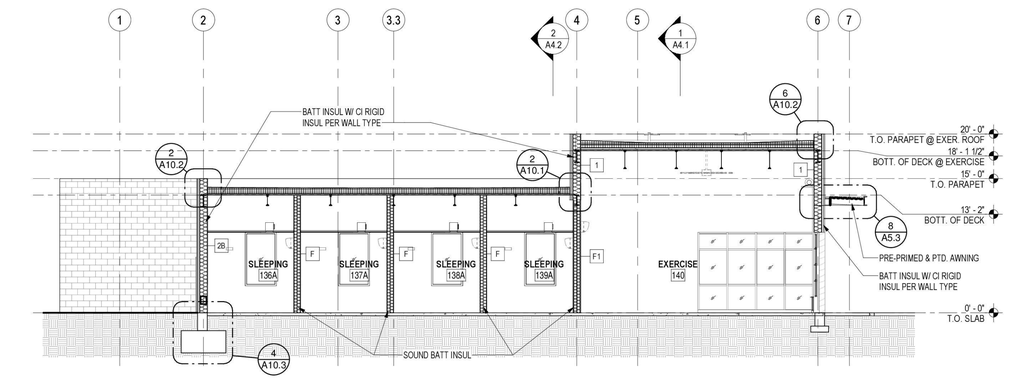

5 EAST-WEST SECTION THROUGH SLEEPING AND EXERCISE

Scale: 1/8" = 1'-0"

TCA
ARCHITECTURE + PLANNING + DESIGN
6211 ROOSEVELT WAY NORTHEAST
SEATTLE, WA 98115
tel: (206) 522-3830
fax: (206) 522-2456

6235 REGISTERED ARCHITECT
BRIAN J. HARRIS
STATE OF WASHINGTON

July 21, 2020

BID SET

No.	Description	Date:

Project Title:

Fire Station 24
City of Kirkland
Kirkland, Washington

Sheet Title:

BUILDING SECTIONS

Scale: As indicated
Project No. : 16-46
Date : July 21, 2020

Sheet Number :

A4.2

C:\Users\michelle\Documents\16-46 Kirkland 24_CENTRAL_R19 0721_michelle@tca-inc.com.rvt

Provided to Builders Exchange of WA, Inc. For usage Conditions Agreement see www.bxwa.com - Always Verify Scal

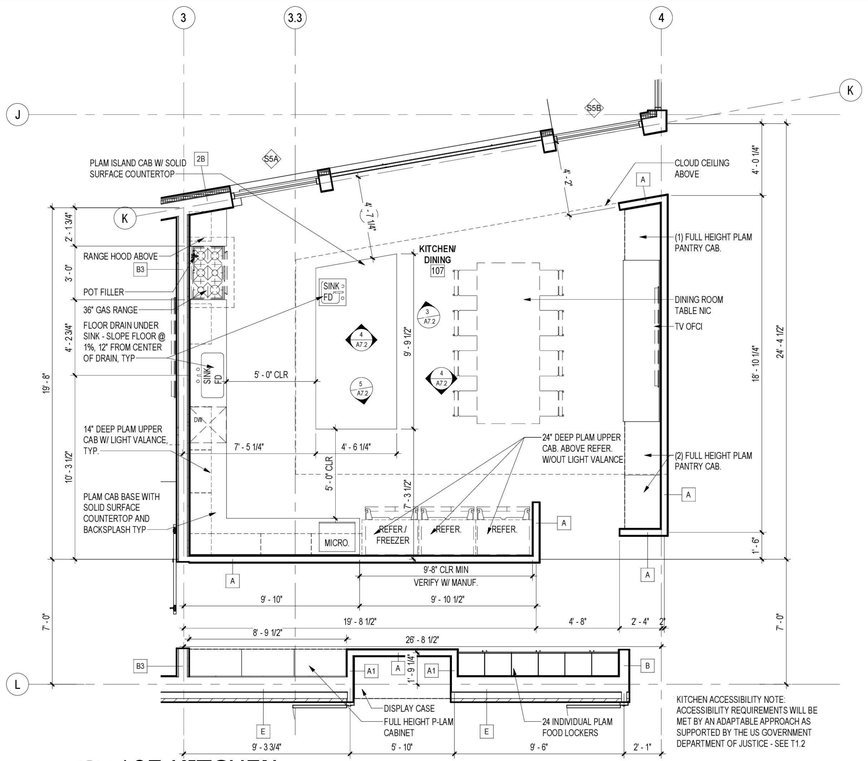

1 107 KITCHEN
Scale: 1/4" = 1'-0"

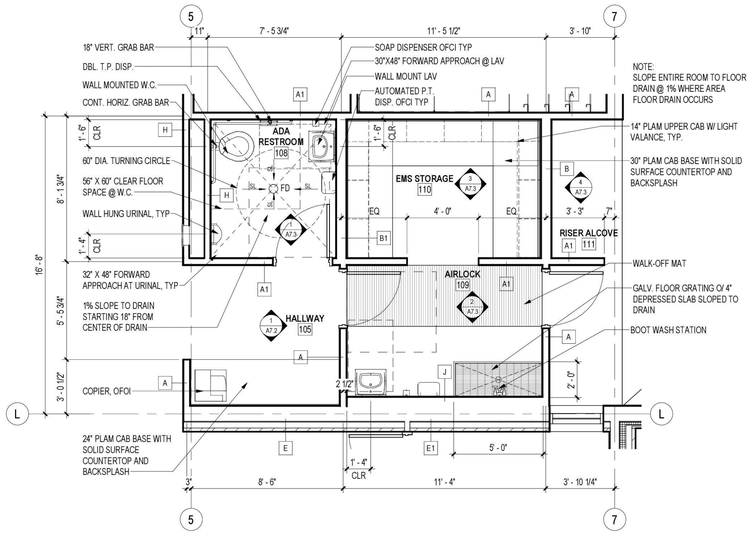

2 105,108,109 & 110, HALL, RESTRM, AIRLOCK & EMS STOR.
Scale: 1/4" = 1'-0"

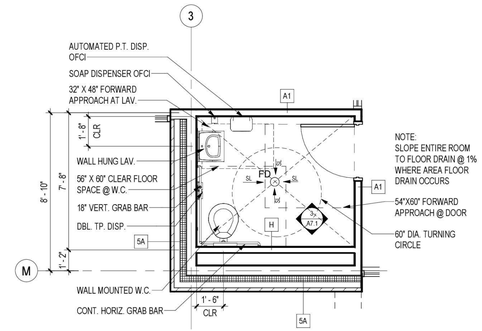

3 102 PUBLIC RESTROOM
Scale: 1/4" = 1'-0"

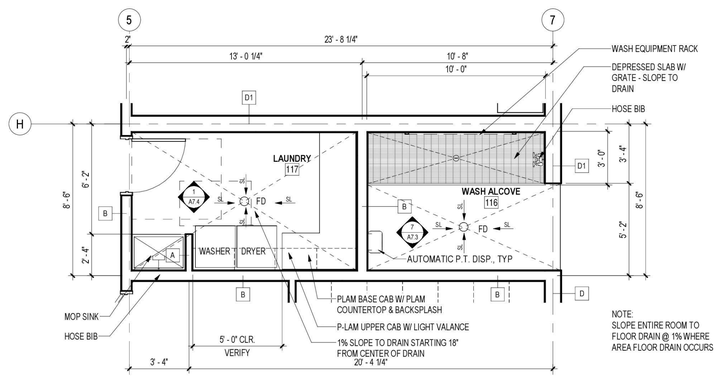

5 116/ 117 WASH ALCOVE & LAUNDRY
Scale: 1/4" = 1'-0"

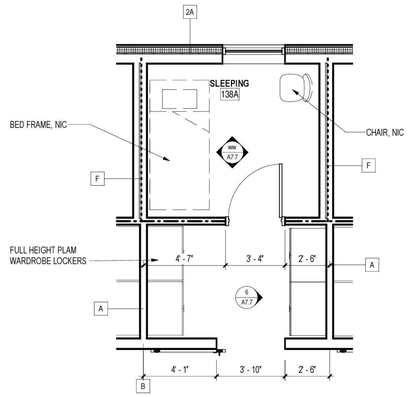

4 TYPICAL BEDROOM
Scale: 1/4" = 1'-0"

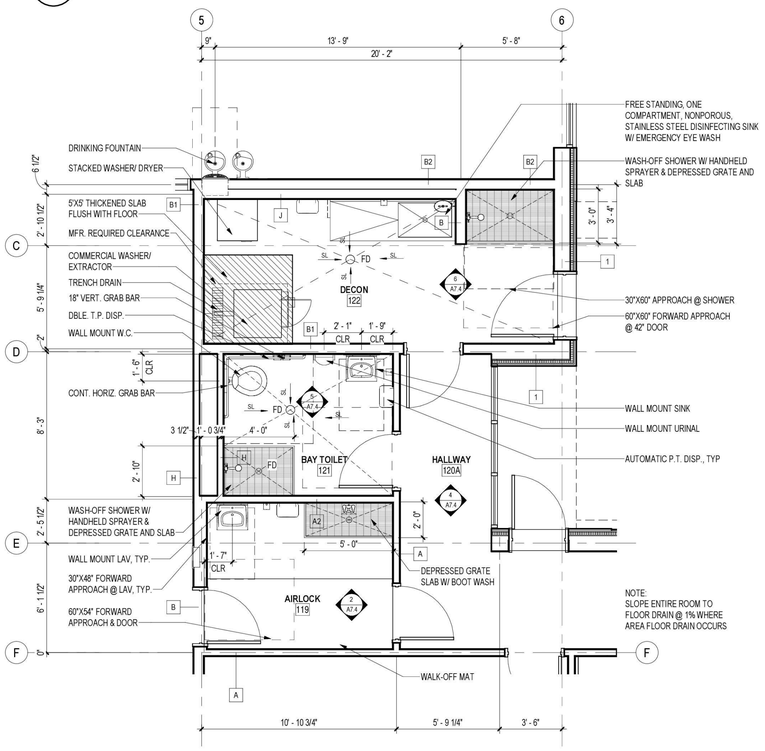

6 119, 121 & 122 DECON, BAY TOILET AND AIRLOCK
Scale: 1/4" = 1'-0"

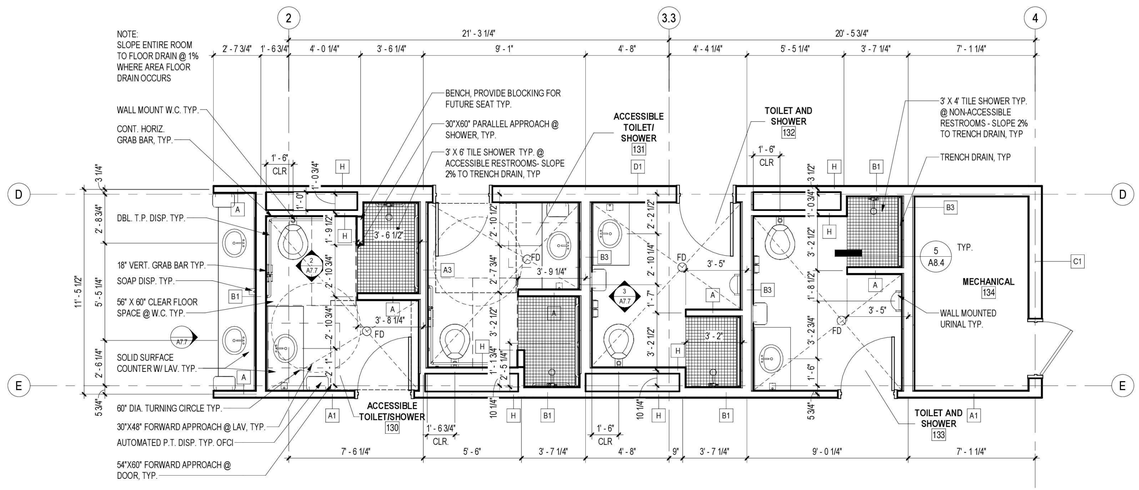

7 130-133 RESTROOM CORE
Scale: 1/4" = 1'-0"

TCA
ARCHITECTURE + PLANNING + DESIGN
6211 ROOSEVELT WAY NORTHEAST
SEATTLE, WA 98115
tel: (206) 522-3830
fax: (206) 522-2456
6235 REGISTERED ARCHITECT
BRIAN J. HARRIS STATE OF WASHINGTON

July 21, 2020

BID SET

No.	Description	Date:
1	City Revisions	7/14/20

Project Title:

Fire Station 24
City of Kirkland
Kirkland, Washington

Sheet Title:

ENLARGED PLANS

Scale: 1/4" = 1'-0"
Project No. : 16-46
Date : July 21, 2020

Sheet Number :

A5.1

C:\Users\michelle\Documents\16-46 Kirkland 24_CENTRALx_michelle@tca-inc.com.rvt

Provided to Builders Exchange of WA, Inc. For usage Conditions Agreement see www.bxwa.com - Always Verify Scal

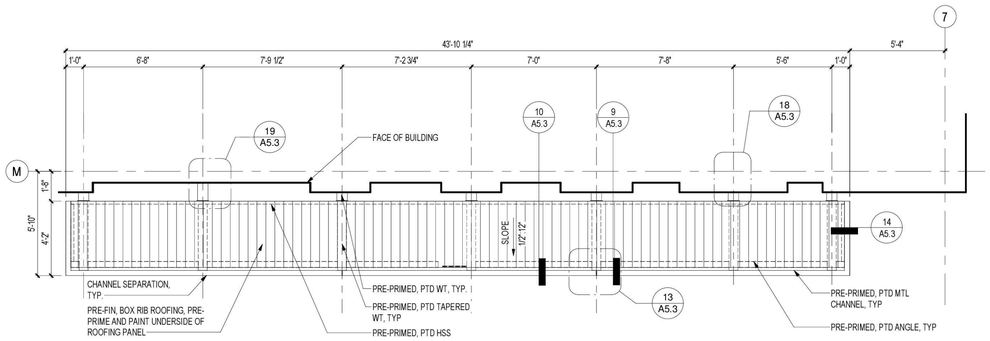

1 AWNING 1 ENLARGED PLAN

Scale: 1/4" = 1'-0"

AWNING/ CANOPY GENERAL NOTES

1. ALL EXPOSED STEEL SHALL BE PRIMED AND PAINTED
2. EXPOSED UNDERSIDE OF ROOFING SHALL BE PRIMED AND PAINTED
3. LIGHT FIXTURES, CONDUIT AND WALL AND HSS PENETRATIONS ARE SHOWN FOR REFERENCE ONLY - COORDINATE LOCATIONS WITH ELECTRICAL.
4. PROVIDE SEALANT AT ALL CONDUIT PENETRATIONS THROUGH HSS

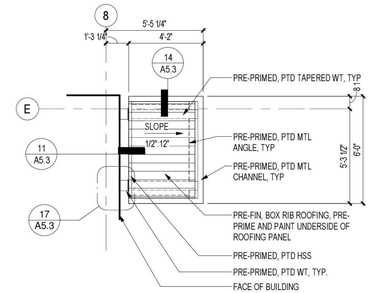

2 AWNING 3 ENLARGED PLAN

Scale: 1/4" = 1'-0"

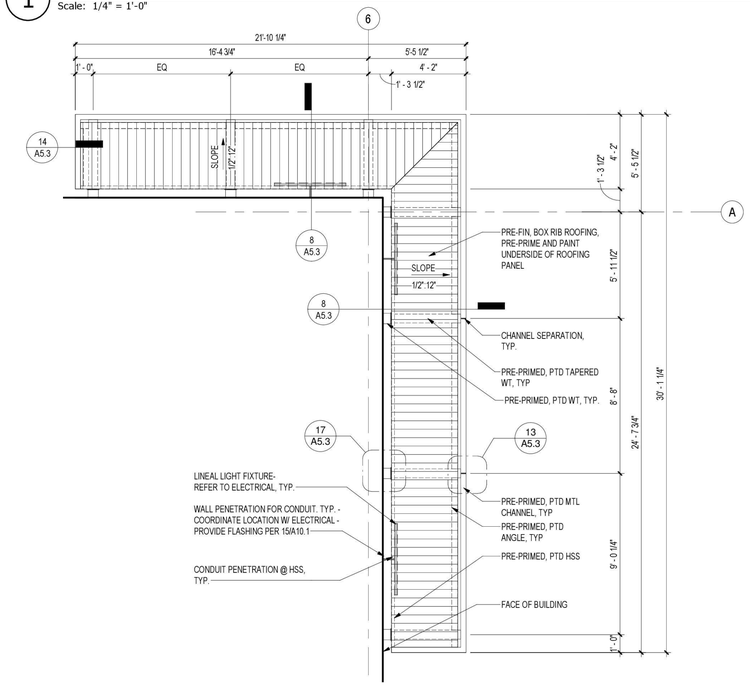

4 AWNING 4 ENLARGED PLAN

Scale: 1/4" = 1'-0"

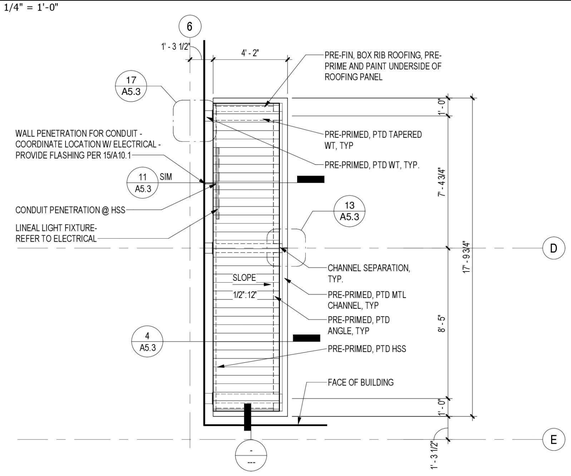

6 AWNING 6 ENLARGED PLAN

Scale: 1/4" = 1'-0"

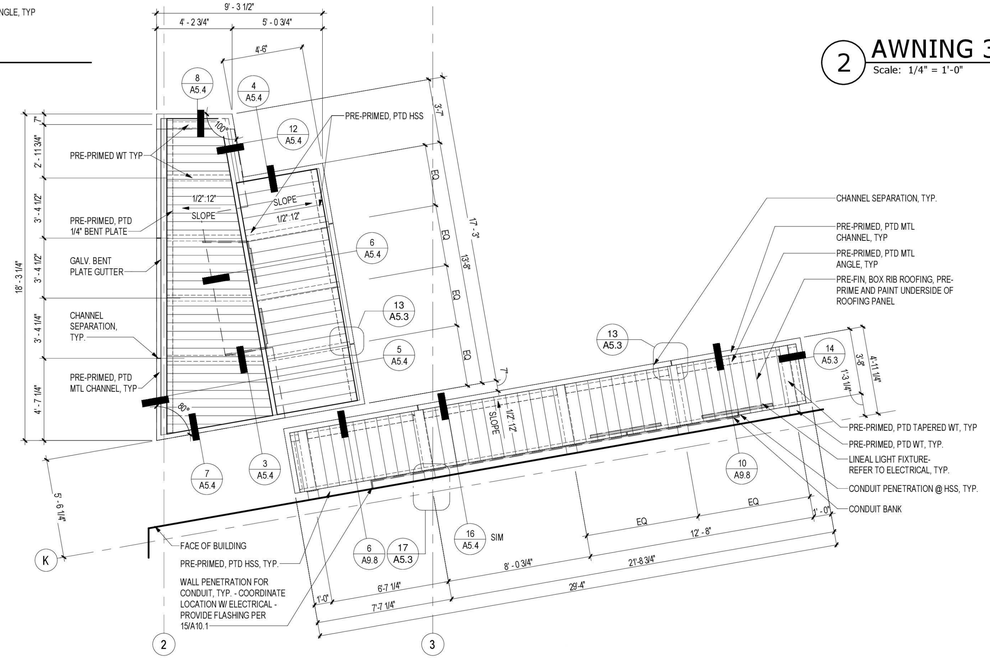

3 CANOPY 1/ AWNING 5 ENLARGED PLAN

Scale: 1/4" = 1'-0"

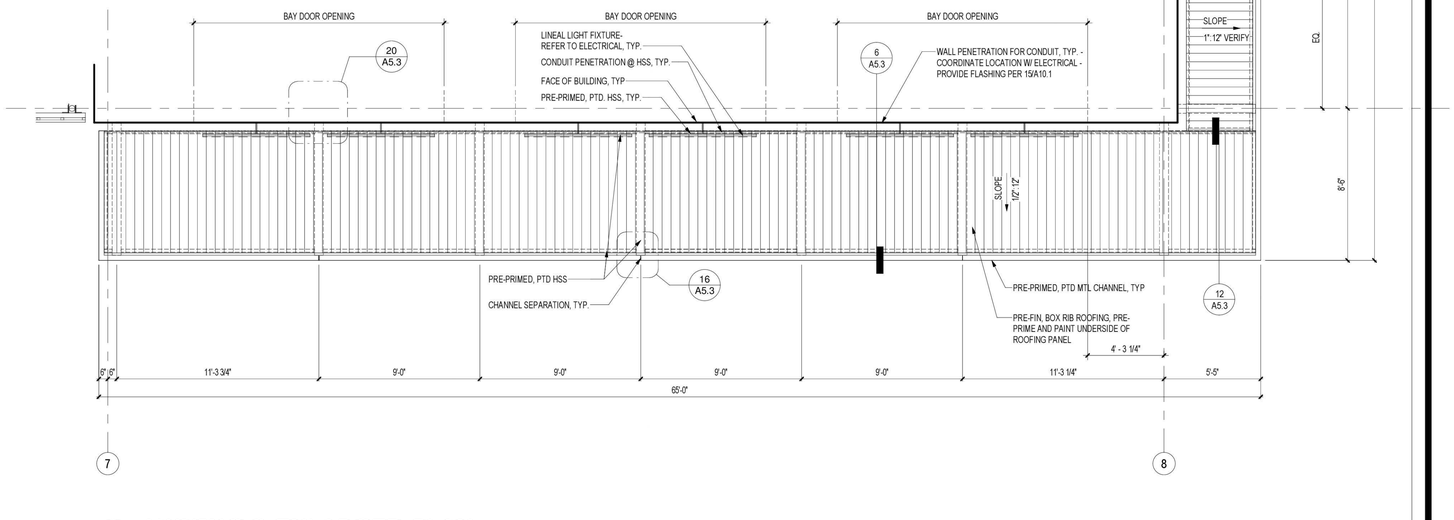

5 AWNING 2 ENLARGED PLAN

Scale: 1/4" = 1'-0"

TCA
ARCHITECTURE + PLANNING + DESIGN
6211 ROOSEVELT WAY NORTHEAST
SEATTLE, WA 98115
tel: (206) 522-3830
fax: (206) 522-2456

6235 REGISTERED ARCHITECT
BRIAN J. HARRIS
STATE OF WASHINGTON

July 21, 2020

BID SET

No.	Description	Date:

Project Title:

Fire Station 24

City of Kirkland
Kirkland, Washington

Sheet Title:

ENLARGED AWNING/ CANOPY PLANS

Scale: As indicated
Project No. : 16-46
Date : July 21, 2020

Sheet Number :

A5.2

C:\Users\michelle\Documents\16-46 Kirkland 24_CENTRALx_michelle@tca-inc.com.rvt

Provided to Builders Exchange of WA, Inc. For usage Conditions Agreement see www.bxwa.com - Always Verify Scal

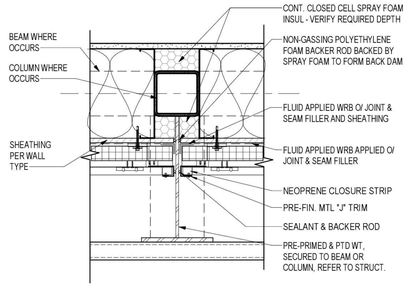

NOTE:
REFER TO 13/A10.1 FOR PENETRATION FLASHING DIAGRAM

17 WT FLASHING @ MTL SIDING
Scale: 1 1/2" = 1'-0"

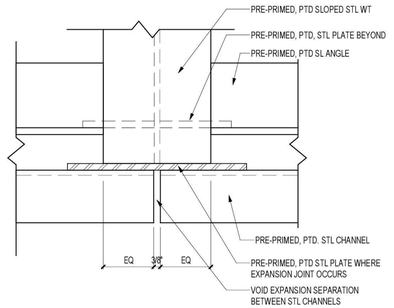

13 CHANNEL SEPARATION @ WT
Scale: 3" = 1'-0"

NOTE:
1. REFER TO 18/A5.3 FOR PENETRATION FLASHING NOTES

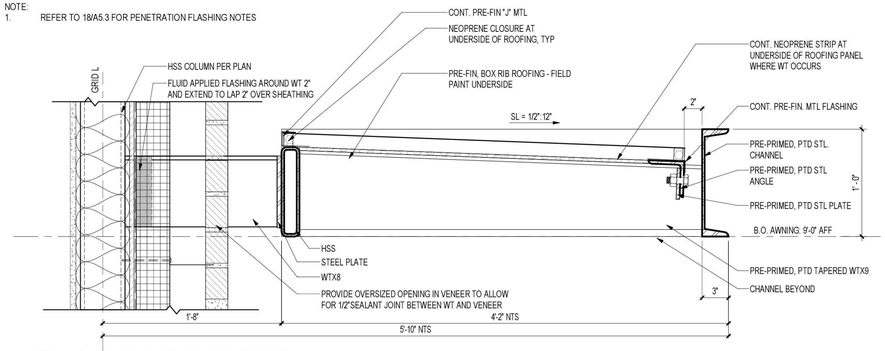

9 AWNING @ BRICK
Scale: 1 1/2" = 1'-0"

CANOPY/ AWNING DETAILS GENERAL NOTES

1. REFER TO SHEETS A2.1, A5.1 AND A9.1 FOR EXTERIOR ENVELOPE TYPES, CONSTRUCTION NOTES AND DIMENSIONS
2. REFER TO SHEET A10.1 FOR ENLARGED FLASHING DETAILS
3. ALL WALL PENETRATIONS SHALL BE FULLY SEALED PER 13/A10.1
4. REFER TO ROOF PLANS FOR ROOF SLOPE
5. REFER TO STRUCTURAL SHEETS FOR SLAB, WALL AND ROOF STRUCTURE
6. THERMAL BRACKETS SHALL BE SET IN LIQUID APPLIED FLASHING O/ WRB
7. REFER TO SHEETS A9.7 AND A9.9 FOR BALANCE OF NOTES AND DIMS WHERE WINDOWS OR STOREFRONTS OCCUR ABOVE OF BELOW AWNINGS/ CANOPIES
8. ALL EXPOSED STEEL SHALL BE PRE-PRIMED, PTD UNO.
9. EXPOSED UNDERSIDE OF ROOFING PANELS SHALL BE PRE-PRIMED, PTD
10. LIGHTING FIXTURES, CONDUIT AND J-BOXES ARE SHOWN FOR REFERENCE ONLY - COORDINATE LOCATIONS WITH ELECTRICAL
11. ALL HSS PENETRATIONS SHALL BE FULLY SEALED

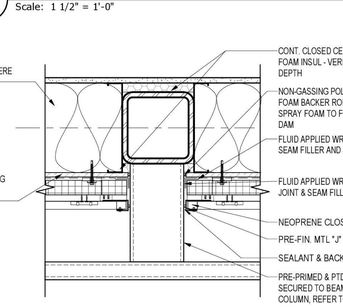

NOTE:
1. REFER TO 17/A5.3 FOR BALANCE OF NOTES & DIMS
2. REFER TO 13/A10.1 FOR PENETRATION FLASHING DIAGRAM

18 WT FLASHING @ BRICK
Scale: 1 1/2" = 1'-0"

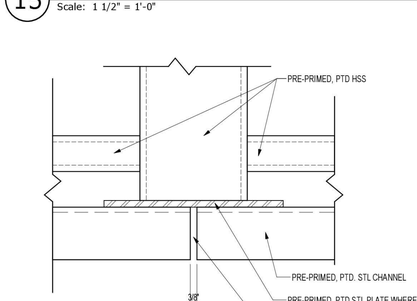

14 AWNING EDGE AT SLOPED WT
Scale: 1 1/2" = 1'-0"

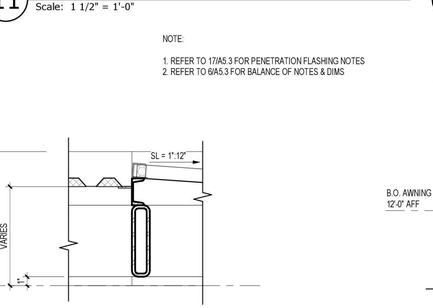

NOTE:
1. REFER TO 19/A5.3 FOR PENETRATION FLASHING NOTES
2. REFER TO 9/A5.3 FOR BALANCE OF NOTES & DIMS AND EDGE OF AWNING

10 AWNING @ HPL PANEL
Scale: 1 1/2" = 1'-0"

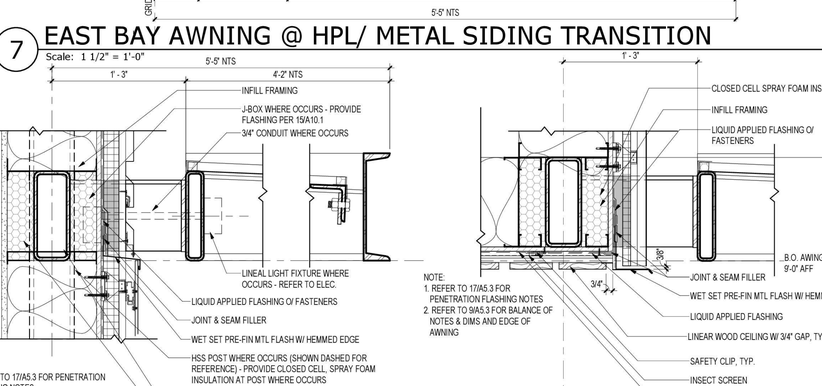

NOTE:
1. REFER TO 17/A5.3 FOR PENETRATION FLASHING NOTES

6 SOUTH BAY AWNING @ HPL/ METAL SIDING TRANSITION
Scale: 1 1/2" = 1'-0"

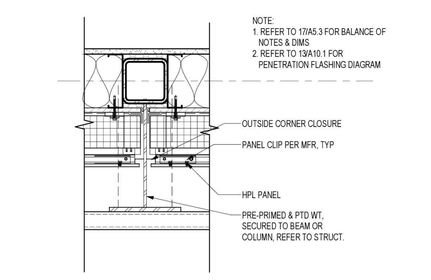

NOTE:
REFER TO 13/A10.1 FOR PENETRATION FLASHING DIAGRAM

19 WT FLASHING @ HPL PANEL
Scale: 1 1/2" = 1'-0"

15 CHANNEL SEPARATION @ TUBE STL.
Scale: 3" = 1'-0"

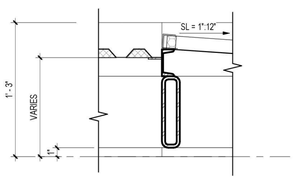

NOTE:
1. REFER TO 17/A5.3 FOR PENETRATION FLASHING NOTES
2. REFER TO 6/A5.3 FOR BALANCE OF NOTES & DIMS

11 AWNING AT MTL SIDING
Scale: 1 1/2" = 1'-0"

NOTE:
1. REFER TO 17/A5.3 FOR PENETRATION FLASHING NOTES
2. REFER TO 9/A5.3 FOR BALANCE OF NOTES & DIMS AND EDGE OF AWNING

7 EAST BAY AWNING @ HPL/ METAL SIDING TRANSITION
Scale: 1 1/2" = 1'-0"

NOTE:
REFER TO 13/A10.1 FOR PENETRATION FLASHING DIAGRAM

20 HSS FLASHING @ MTL SIDING
Scale: 1 1/2" = 1'-0"

NOTE:
1. REFER TO 17/A5.3 FOR BALANCE OF NOTES & DIMS
2. REFER TO 13/A10.1 FOR PENETRATION FLASHING DIAGRAM

16 AWNING EDGE AT HSS
Scale: 1 1/2" = 1'-0"

NOTE:
1. REFER TO 17/A5.3 FOR PENETRATION FLASHING NOTES
2. REFER TO 6/A5.3 FOR BALANCE OF NOTES & DIMS

12 AWNING AT MTL SIDING
Scale: 1 1/2" = 1'-0"

NOTE:
1. REFER TO 17/A5.3 FOR PENETRATION FLASHING NOTES
2. REFER TO 9/A5.3 FOR BALANCE OF NOTES & DIMS AND EDGE OF AWNING

8 AWNING @ HPL/ MTL TRANS
Scale: 1 1/2" = 1'-0"

NOTE:
1. REFER TO 17/A5.3 FOR PENETRATION FLASHING NOTES
2. REFER TO 9/A5.3 FOR BALANCE OF NOTES & DIMS AND EDGE OF AWNING

4 AWNING @ SOFFIT
Scale: 1 1/2" = 1'-0"

TCA
ARCHITECTURE + PLANNING + DESIGN
6211 ROOSEVELT WAY NORTHEAST
SEATTLE, WA 98115
tel: (206) 522-3830
fax: (206) 522-2456

6235 REGISTERED ARCHITECT
BRIAN J. HARRIS
STATE OF WASHINGTON

July 21, 2020

BID SET

No.	Description	Date:

Project Title:

Fire Station 24
City of Kirkland
Kirkland, Washington

Sheet Title:

AWNING DETAILS

Scale: As indicated
Project No. : 16-46
Date : July 21, 2020

Sheet Number :

A5.3

C:\Users\michelle\Documents\16-46 Kirkland 24_CENTRALx_michelle@tca-inc.com.rvt

Provided to Builders Exchange of WA, Inc. For usage Conditions Agreement see www.bxwa.com - Always Verify Scal

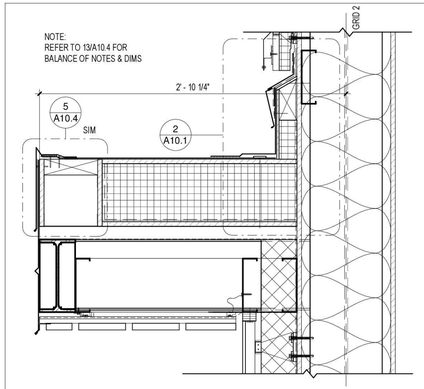

17 ENTRY CANOPY AT HPL PANEL
Scale: 1 1/2" = 1'-0"

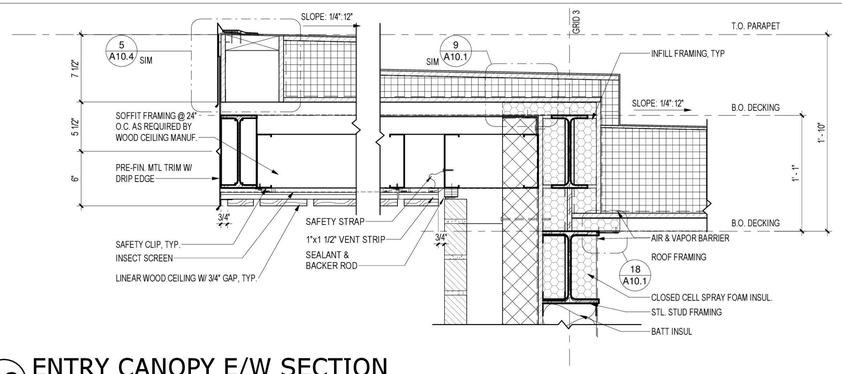

13 ENTRY CANOPY E/W SECTION
Scale: 1 1/2" = 1'-0"

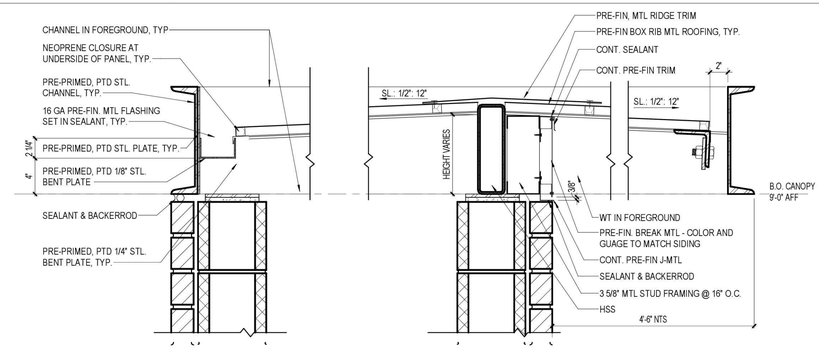

5 BBQ CANOPY SECTION
Scale: 1 1/2" = 1'-0"

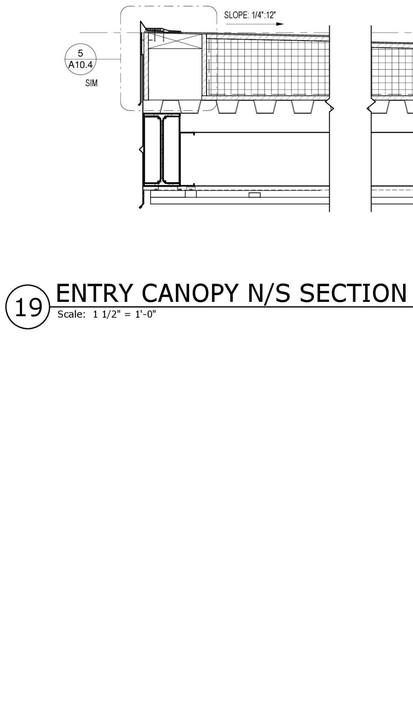

ENTRY CANOPY AT BRICK VENEER
18
Scale: 1 1/2" = 1'-0"

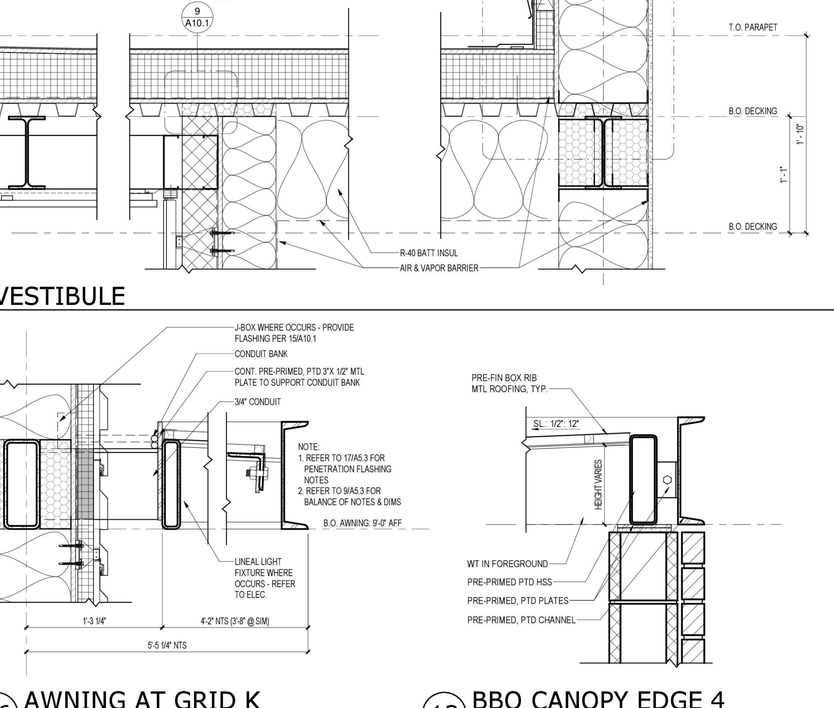

14 ENTRY CANOPY E/W SECTION AT VESTIBULE
Scale: 1 1/2" = 1'-0"

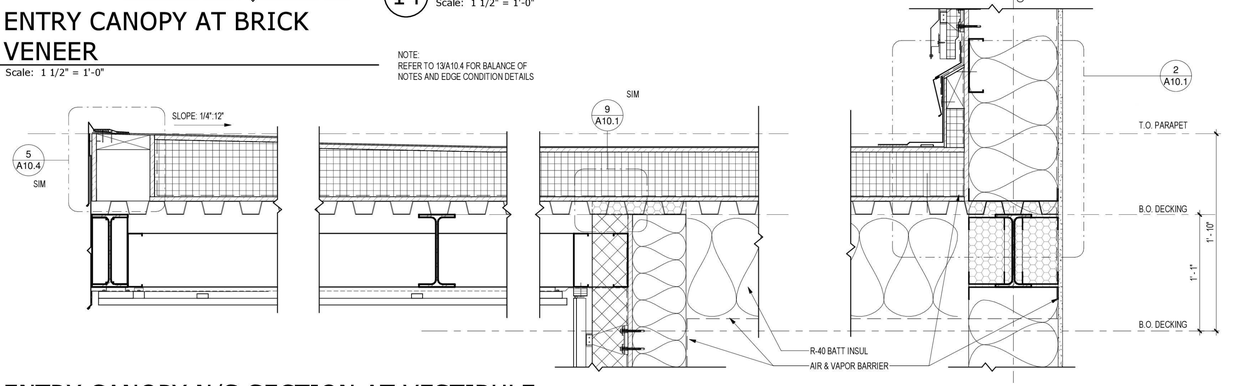

19 ENTRY CANOPY N/S SECTION AT VESTIBULE
Scale: 1 1/2" = 1'-0"

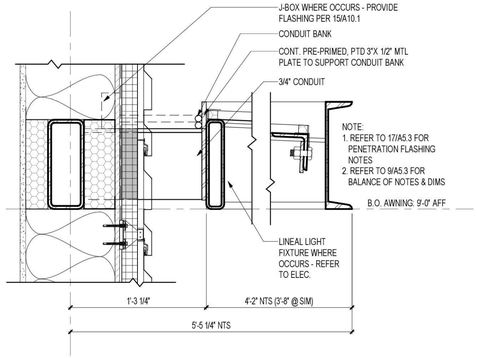

16 AWNING AT GRID K
Scale: 1 1/2" = 1'-0"

12 BBQ CANOPY EDGE 4
Scale: 1 1/2" = 1'-0"

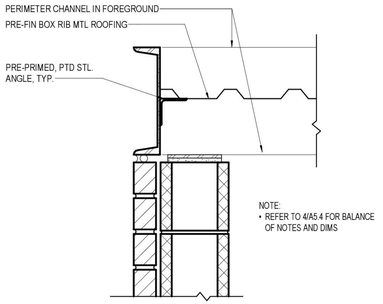

7 BBQ CANOPY EDGE 2
Scale: 1 1/2" = 1'-0"

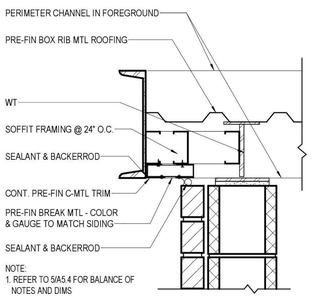

8 BBQ CANOPY EDGE 1
Scale: 1 1/2" = 1'-0"

6 BBQ CANOPY SECTION 2
Scale: 1 1/2" = 1'-0"

CANOPY/ AWNING DETAILS GENERAL NOTES

1. REFER TO SHEETS A2.1, A5.1 AND A9.1 FOR EXTERIOR ENVELOPE TYPES, CONSTRUCTION NOTES AND DIMENSIONS
2. REFER TO SHEET A10.1 FOR ENLARGED FLASHING DETAILS
3. ALL WALL PENETRATIONS SHALL BE FULLY SEALED PER 13/A10.1
4. REFER TO ROOF PLANS FOR ROOF SLOPE
5. REFER TO STRUCTURAL SHEETS FOR SLAB, WALL AND ROOF STRUCTURE
6. THERMAL BRACKETS SHALL BE SET IN LIQUID APPLIED FLASHING O/ WRB
7. REFER TO SHEETS A9.7 AND A9.9 FOR BALANCE OF NOTES AND DIMS WHERE WINDOWS OR STOREFRONTS OCCUR ABOVE OF BELOW AWNINGS/ CANOPIES
8. ALL EXPOSED STEEL SHALL BE PRE-PRIMED, PTD UNO.
9. EXPOSED UNDERSIDE OF ROOFING PANELS SHALL BE PRE-PRIMED, PTD
10. LIGHTING FIXTURES, CONDUIT AND J-BOXES ARE SHOWN FOR REFERENCE ONLY - COORDINATE LOCATIONS WITH ELECTRICAL
11. ALL HSS PENETRATIONS SHALL BE FULLY SEALED

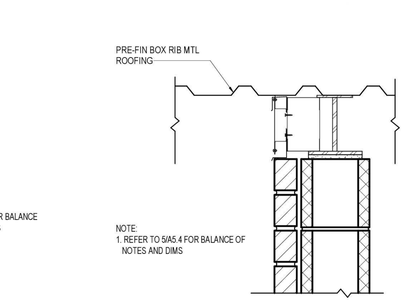

3 BBQ CANOPY DETAIL
Scale: 1 1/2" = 1'-0"

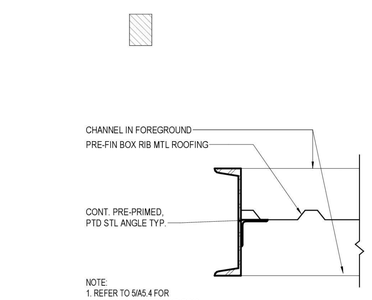

4 BBQ CANOPY EDGE 3
Scale: 1 1/2" = 1'-0"

TCA
ARCHITECTURE + PLANNING + DESIGN
6211 ROOSEVELT WAY
NORTHEAST
SEATTLE, WA 98115
tel: (206) 522-3830
fax: (206) 522-2456

6235 REGISTERED ARCHITECT
BRIAN J. HARRIS
STATE OF WASHINGTON

July 21, 2020

BID SET

No.	Description	Date:

Project Title:

Fire Station 24
City of Kirkland
Kirkland, Washington

Sheet Title:

CANOPY DETAILS

Scale: As indicated
Project No. : 16-46
Date : July 21, 2020

Sheet Number :

A5.4

C:\Users\michelle\Documents\16-46 Kirkland 24_CENTRALx_michelle@tca-inc.com.rvt

Provided to Builders Exchange of WA, Inc. For usage Conditions Agreement see www.bxwa.com - Always Verify Scal

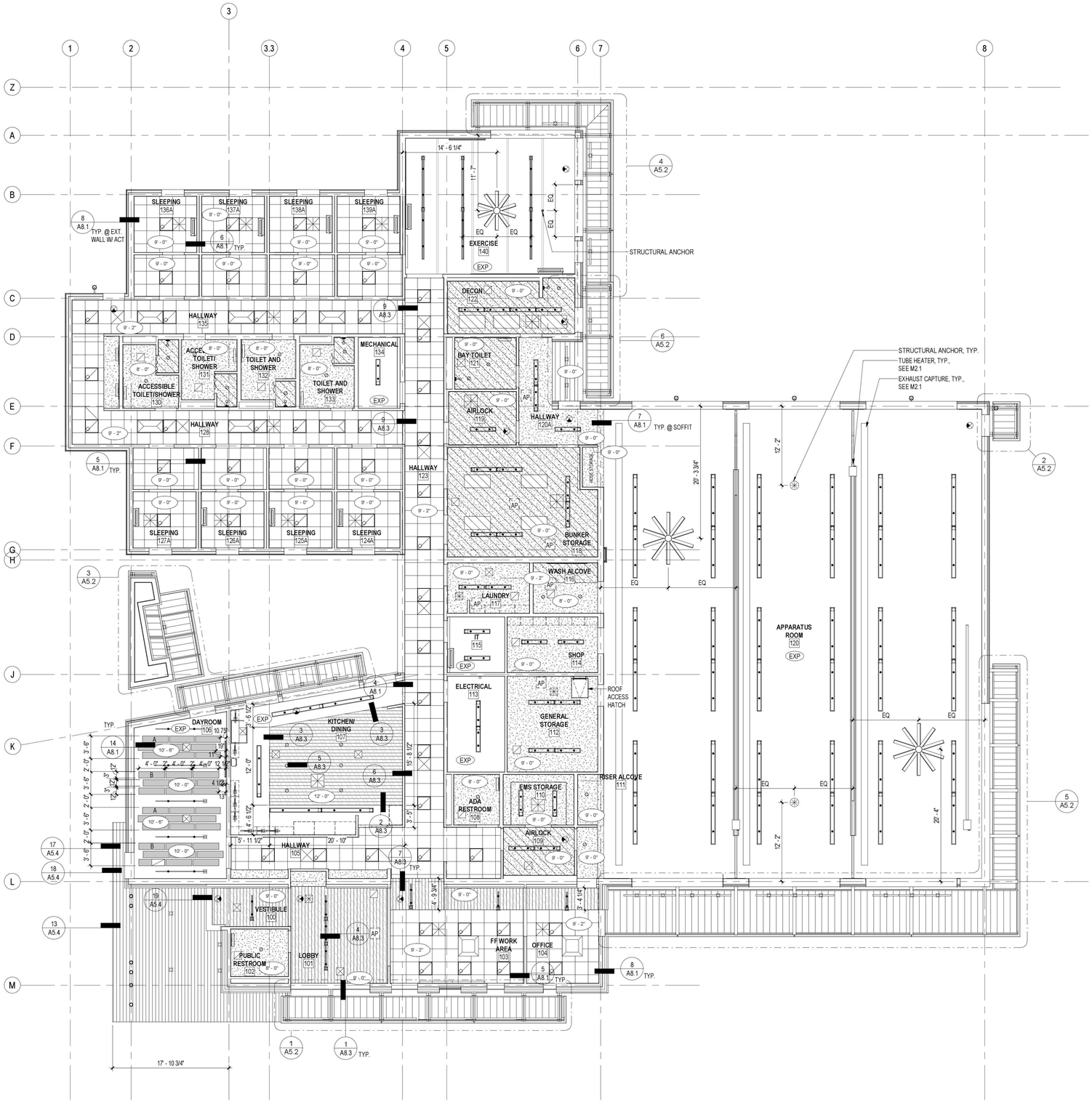

RCP LEGEND:

- INDICATES GYPSUM BOARD CEILING: CEILING TYPE C2
- 2 X 2 ACOUSTICAL PANEL CEILING: CEILING TYPE C1
- GYP. BACKERBOARD CEILING - SKIMCOAT FOR SMOOTH SURFACE AS REQUIRED
- ACOUSTIC WOOD PANEL
- ACOUSTIC CLOUD
- LINEAR WOOD PANEL SOFFIT

- INDICATES 20X30 ROOF ACCESS HATCH
- SUSPENDED LIGHT FIXTURE
- UNDERCABINET LIGHT FIXTURE
- SURFACE MOUNTED LIGHT FIXTURE
- LAYIN LIGHT FIXTURE
- WALL MOUNTED LIGHT
- RECESSED DOWNLIGHT
- WALL MOUNTED BED LIGHT
- EXTERIOR LIGHT
- EXIT LIGHT
- AP — ACCESS PANEL
- RETURN AIR EXHAUST, SEE MECHANICAL
- SUPPLY AIR, SEE MECHANICAL
- SKYLIGHT
- RADIANT CEILING PANEL, SEE MECHANICAL
- 9'-0" — FINISH HEIGHT ABOVE FIN. FLOOR
- EXP — EXPOSED CEILING & OPEN FRAMING
- MECHANICAL CEILING FAN

GENERAL NOTES

1. CONTRACTOR TO SUBMIT COORDINATION DRAWINGS INDICATING O.H. DOOR BLOCKING, O.H. DOOR TRACK BRACING, LIGHTING, RADIANT HEAT, SPRINKLER LINES & HEADS PRIOR TO MECH. AND ELECT. INSTALLATIONS AT APPARATUS ROOM.
2. SEISMIC CLIPS (BERC 2) INSTALLATION REQUIRE SPECIAL INSPECTIONS. COORDINATE INSPECTIONS WITH OWNER'S SPECIAL INSPECTION AGENCY.
3. PROVIDE COLLAR /TRIM AT ALL CEILING PENETRATIONS FROM O.H. TRACK BRACING, RADIANT HEAT FLUES, AIR DROPS, WATER DROPS, ETC.
4. DROPPED CEILING JOISTS:
   2X6 @ 2'-0" O.C. FOR SPANS < 12'-0"
   2X10 @ 16" O.C. FOR SPANS >12'-0" & < 18'-0"
   SEE MECHANICAL & PLUMBING PLANS & SPECS FOR ADDITIONAL CEILING & WALL ACCESS PANELS AT MECHANICAL EQUIPMENT.
5. SEE MECHANICAL & PLUMBING PLANS & SPECS FOR ADDITIONAL CEILING & WALL ACCESS PANELS AT MECHANICAL EQUIPMENT.
6. PROVIDE REMOVABLE CROSS RUNNERS AT ACOUSTICAL PANEL CEILING SUSPENSION SYSTEM WHERE ACCESS TO MECHANICAL SYSTEMS IS NECESSARY.
7. ALL EXTERIOR UNDER AWNING LIGHTING, SUPPORTS, CONDUIT & J-BOXES PRIMED & PTD. TYP. TO MATCH AWNING COLOR.
8. UNDERSIDE OF ALL AWNING ROOFING PRIMED & PTD TYP.
9. BIDDER DESIGNED SOURCE CAPTURE EXHAUST SYSTEM IS NOT SHOWN AT APPARATUS BAY- SEE MECHANICAL DRAWINGS.
10. PAINT CEILING SPACE WHERE REQ'D- SEE FINISH SCHEDULE ON A9.4.

1 REFLECTED CEILING PLAN

Scale: 1/8" = 1'-0"

0 4' 8' 16'
1/8" = 1'

TCA
ARCHITECTURE + PLANNING + DESIGN
6211 ROOSEVELT WAY NORTHEAST
SEATTLE, WA 98115
tel: (206) 522-3830
fax: (206) 522-2456

6235 REGISTERED ARCHITECT
BRIAN J. HARRIS
STATE OF WASHINGTON

July 21, 2020

BID SET

No.	Description	Date:

Project Title:

Fire Station 24
City of Kirkland
Kirkland, Washington

Sheet Title:

REFLECTED CEILING PLAN

Scale: 1/8" = 1'-0"
Project No. : 16-46
Date : July 21, 2020

Sheet Number :

A6.1

C:\Users\christine\Documents\16-46 Kirkland 24_CENTRALx_christineGTSPN.rvt

Provided to Builders Exchange of WA, Inc. For usage Conditions Agreement see www.bxwa.com - Always Verify Scal

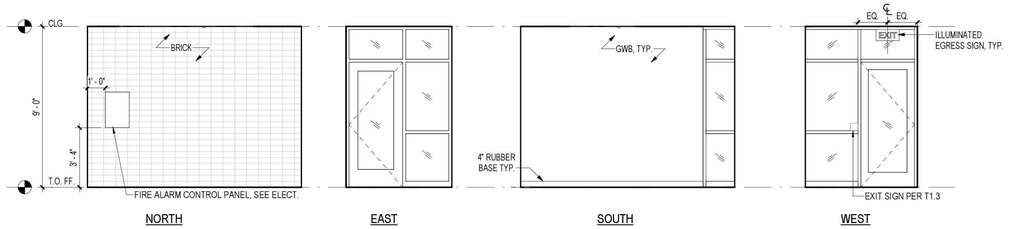

1 100 VESTIBULE

Scale: 1/4" = 1'-0"

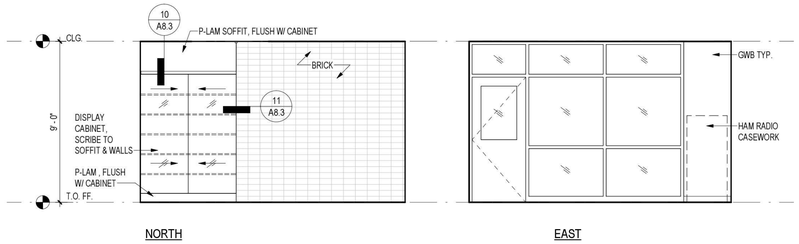

2 101 LOBBY

Scale: 1/4" = 1'-0"

GENERAL NOTES

1. PROVIDE FULL HEIGHT BACKER BD. WALLS & CLG. OF SHOWER ENCLOSURE AND MOP SINKS,TYP.
2. PROVIDE WATER RESISTANT GWB AT ALL WET WALLS.
3. PROVIDE BLOCKING FOR WALL MOUNTED MARKER/ TACK BOARDS, TV'S, EQUIP., FURNISHINGS, ACCESSORIES, CABINETS, DOOR STOPS, BRACING, PLUMBING FIXTURES, ETC - INCLUDING BLOCKING FOR ITEMS FURNISH BY OWNER. CONTRACTOR TO COORDINATE LOCATIONS W/ OWNER DURING ROUGH FRAMING.
4. REFER TO SHEETS A6.1 FOR CEILING PLANS.
5. REFER TO SHEETS A9.2 AND 9.3 FOR DOOR AND WINDOW TYPES.
6. REFER TO SHEETS A9.1 AND A9.2 FOR WALL TYPES AND FINISHES.
7. ADA RESTROOMS, FIXTURE MOUNTING HEIGHTS AND CLEARANCE REQUIREMENTS SHALL COMPLY W/ ICC A117.1 CHAPTER 6.
8. ELECTRICAL AND MECHANICAL UNITS ARE SHOWN FOR REFERENCE ONLY.
9. REFER TO T1.3 FOR RESTROOM FIXTURE AND ACCESSORY DIMENSIONS NOT SHOWN.
10. REFER TO 2/A4.1 FOR HEIGHTS OF APPARATUS BAY RADIANT HEATERS, LIGHT FIXTURES, SOURCE CAPTURE EXHAUST, AND CEILING BLADE FANS.

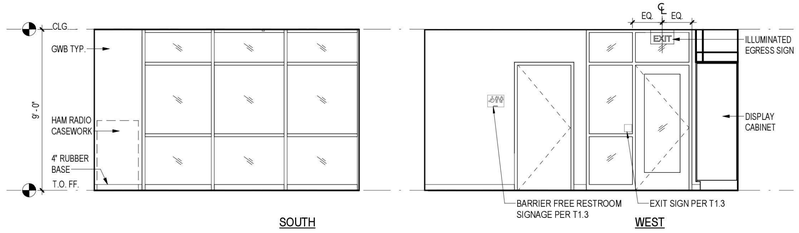

2b 101 LOBBY SOUTH

Scale: 1/4" = 1'-0"

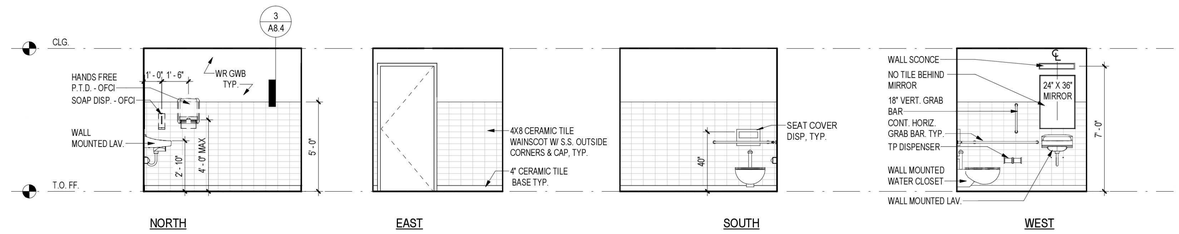

3 102 PUBLIC RESTROOM

Scale: 1/4" = 1'-0"

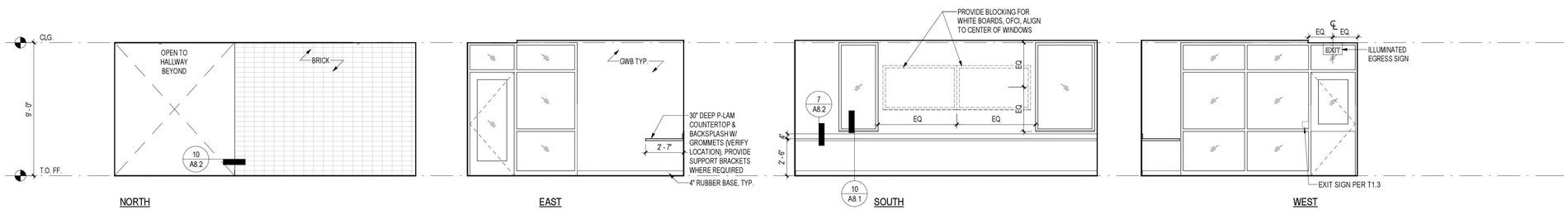

4 103 FF WORK AREA

Scale: 1/4" = 1'-0"

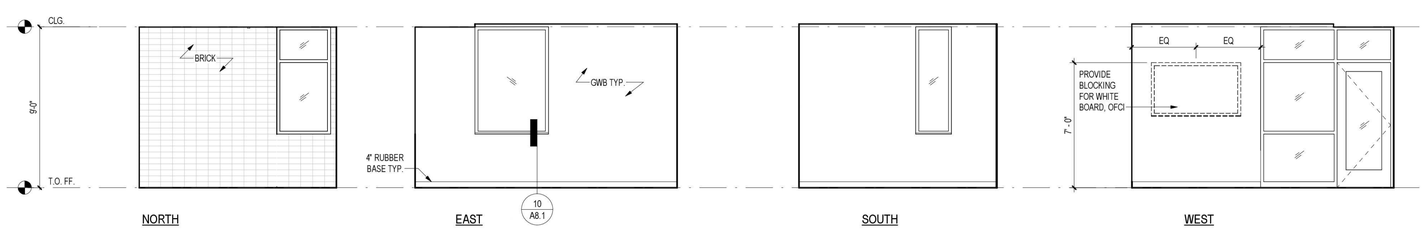

5 104 OFFICE

Scale: 1/4" = 1'-0"

TCA
ARCHITECTURE + PLANNING + DESIGN
6211 ROOSEVELT WAY NORTHEAST
SEATTLE, WA 98115
tel: (206) 522-3830
fax: (206) 522-2456

6235 REGISTERED ARCHITECT
BRIAN J. HARRIS
STATE OF WASHINGTON

July 21, 2020

BID SET

No.	Description	Date:

Project Title:

Fire Station 24
City of Kirkland
Kirkland, Washington

Sheet Title:

INTERIOR ELEVATIONS

Scale: 1/4" = 1'-0"
Project No. : 16-46
Date : July 21, 2020
Sheet Number :

A7.1

C:\Users\christine\Documents\16-46 Kirkland 24_CENTRAL\x_christineGTSPN.rvt

Provided to Builders Exchange of WA, Inc. For usage Conditions Agreement see www.bxwa.com - Always Verify Scal

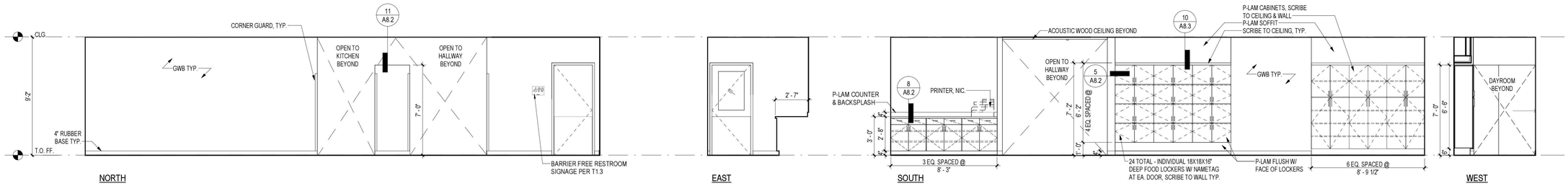

1 105 HALLWAY

Scale: 1/4" = 1'-0"

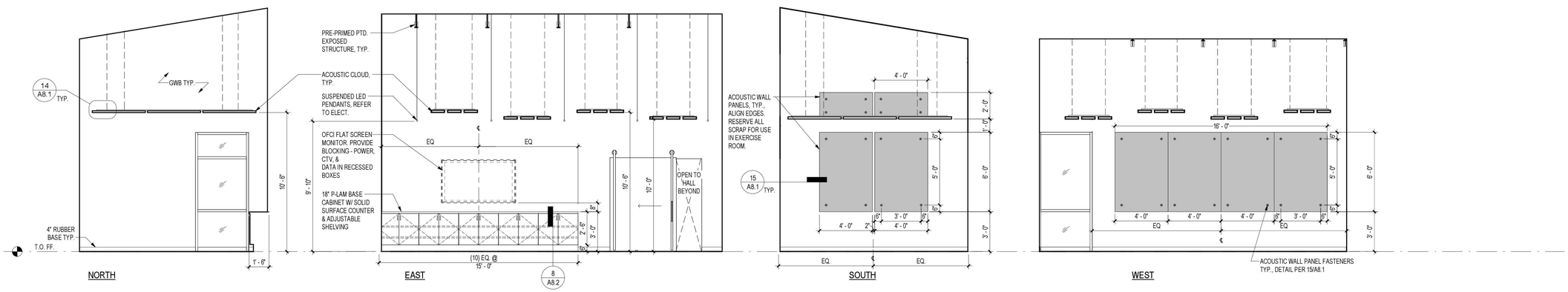

2 106 DAYROOM

Scale: 1/4" = 1'-0"

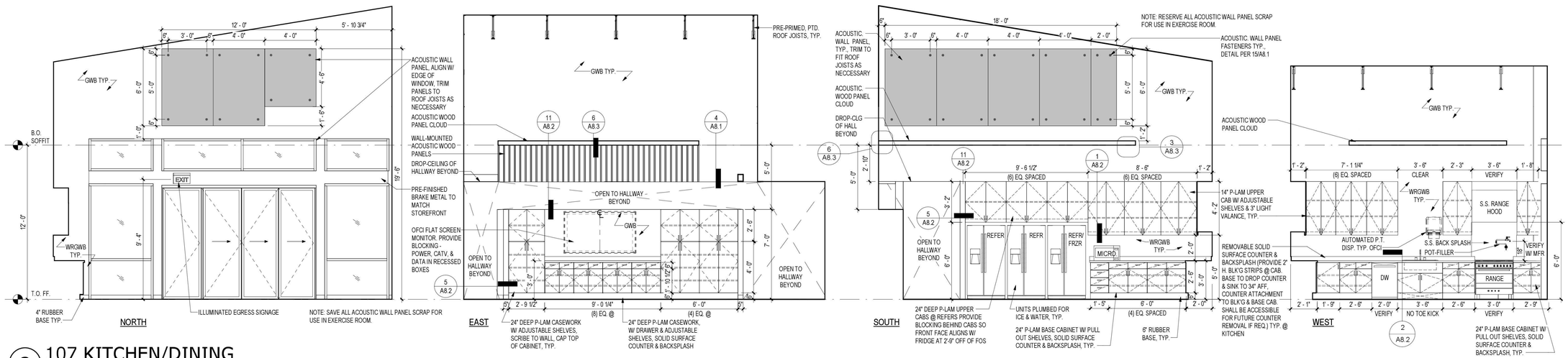

3 107 KITCHEN/DINING

Scale: 1/4" = 1'-0"

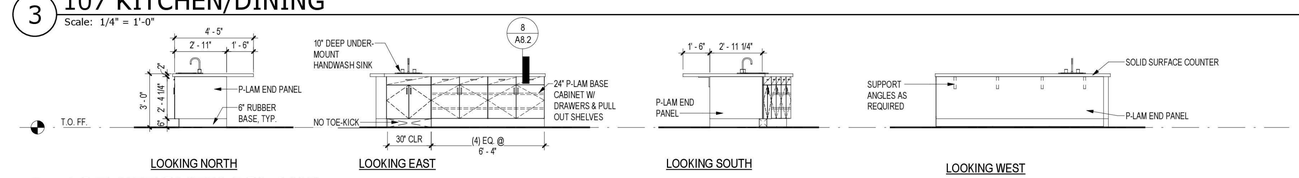

4 107 KITCHEN ISLAND

Scale: 1/4" = 1'-0"

TCA
ARCHITECTURE + PLANNING + DESIGN
6211 ROOSEVELT WAY NORTHEAST
SEATTLE, WA 98115
tel: (206) 522-3830
fax: (206) 522-2456

6235 REGISTERED ARCHITECT
BRIAN J. HARRIS
STATE OF WASHINGTON

July 21, 2020

BID SET

No.	Description	Date:

Project Title:

Fire Station 24

City of Kirkland
Kirkland, Washington

Sheet Title:

INTERIOR ELEVATIONS

Scale: 1/4" = 1'-0"
Project No. : 16-46
Date : July 21, 2020

Sheet Number :

A7.2

C:\Users\christine\Documents\16-46 Kirkland 24_CENTRAL\x_christineGTSPNI.rvt

Provided to Builders Exchange of WA, Inc. For usage Conditions Agreement see www.bxwa.com - Always Verify Scal

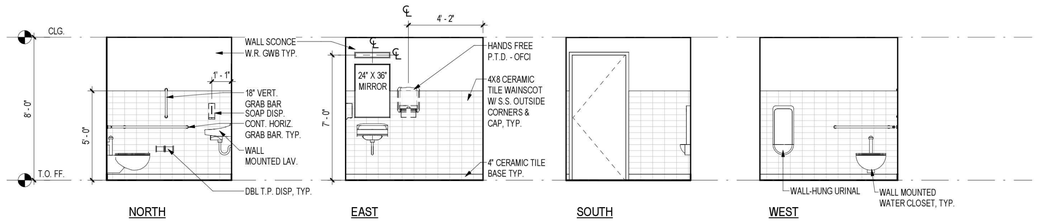

1 108 ADA RESTROOM

Scale: 1/4" = 1'-0"

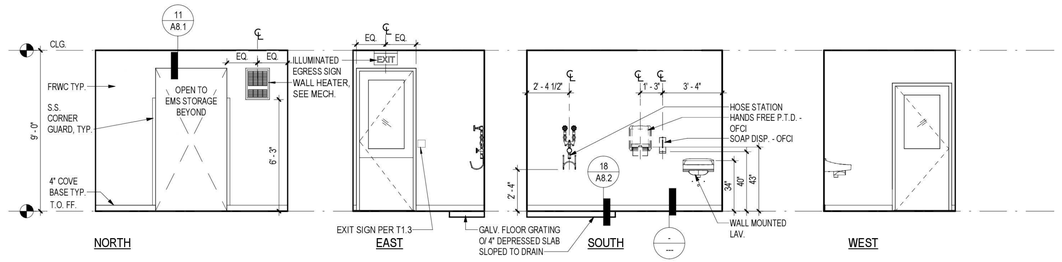

2 109 AIRLOCK

Scale: 1/4" = 1'-0"

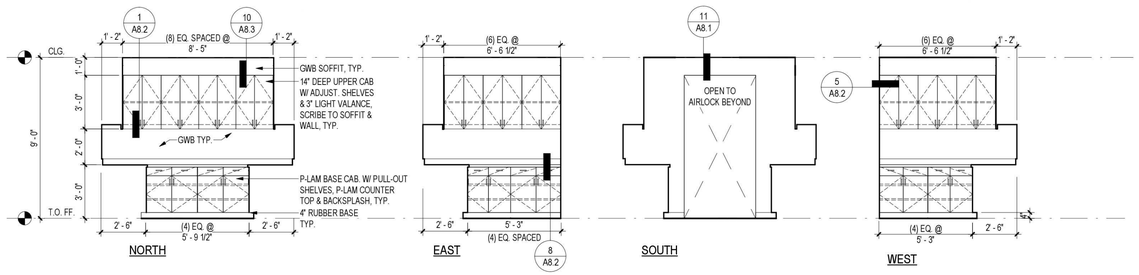

3 110 EMS STORAGE

Scale: 1/4" = 1'-0"

4 111 RISER ALCOVE

Scale: 1/4" = 1'-0"

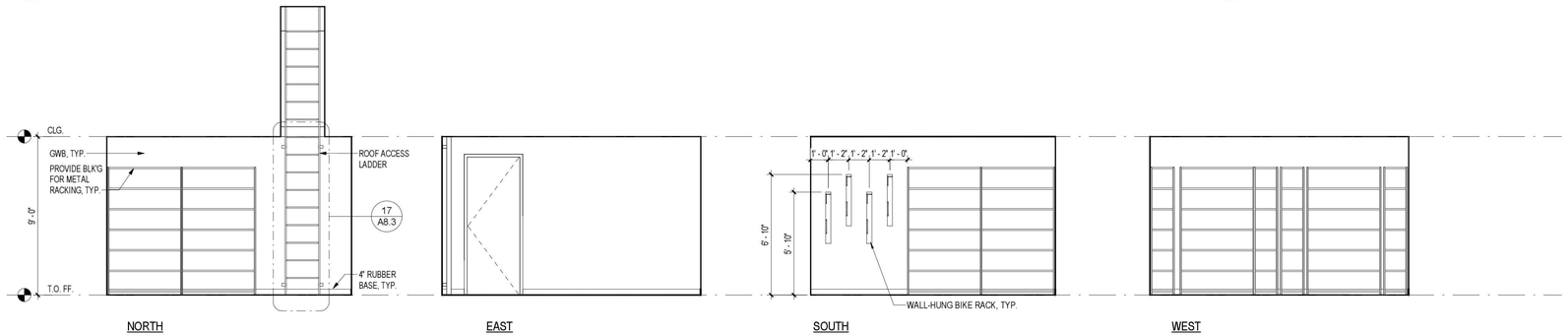

5 112 GENERAL STORAGE

Scale: 1/4" = 1'-0"

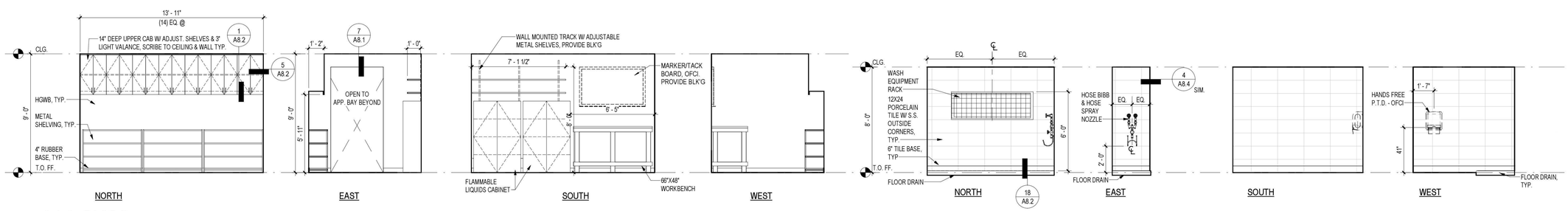

6 114 SHOP

Scale: 1/4" = 1'-0"

7 116 WASH ALCOVE

Scale: 1/4" = 1'-0"

C:\Users\christine\Documents\16-46 Kirkland 24_CENTRALx_christineGTSPNI.rvt

TCA
ARCHITECTURE + PLANNING + DESIGN
6211 ROOSEVELT WAY
NORTHEAST
SEATTLE, WA 98115
tel: (206) 522-3830
fax: (206) 522-2456

6235 REGISTERED ARCHITECT
BRIAN J. HARRIS
STATE OF WASHINGTON

July 21, 2020

BID SET

No.	Description	Date:

Project Title:

Fire Station 24

City of Kirkland
Kirkland, Washington

Sheet Title:

INTERIOR ELEVATIONS

Scale: 1/4" = 1'-0"
Project No. : 16-46
Date : July 21, 2020

Sheet Number :

A7.3

Provided to Builders Exchange of WA, Inc. For usage Conditions Agreement see www.bxwa.com - Always Verify Scal

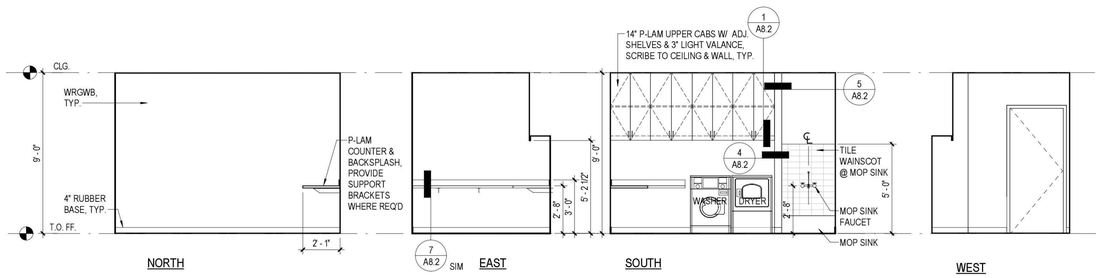

1 117 LAUNDRY

Scale: 1/4" = 1'-0"

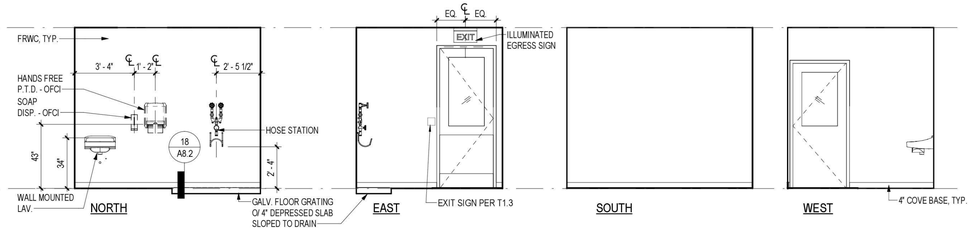

2 119 AIRLOCK

Scale: 1/4" = 1'-0"

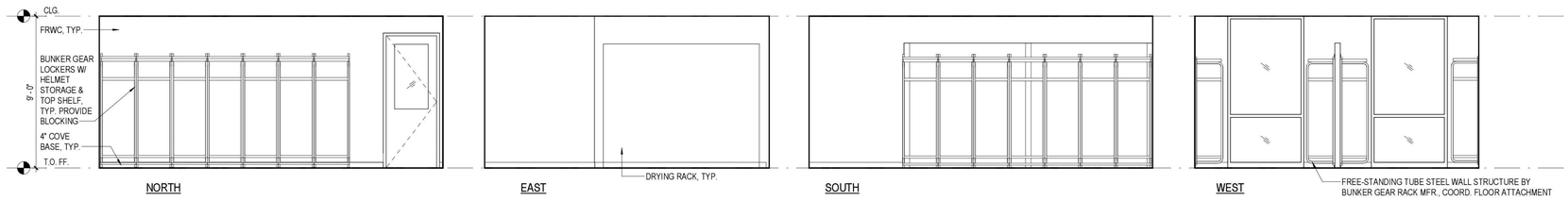

3 118 BUNKER STORAGE

Scale: 1/4" = 1'-0"

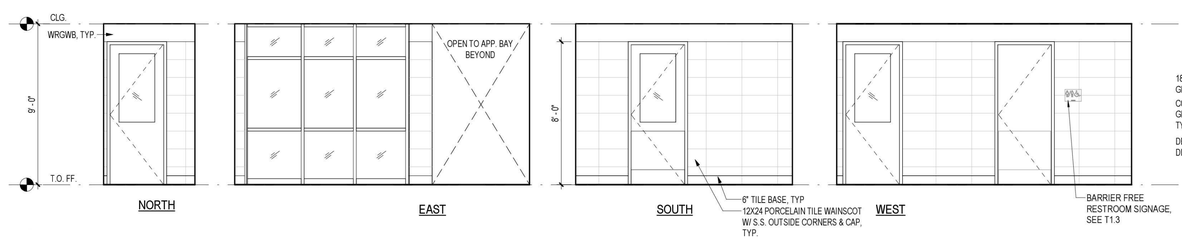

4 120A HALLWAY

Scale: 1/4" = 1'-0"

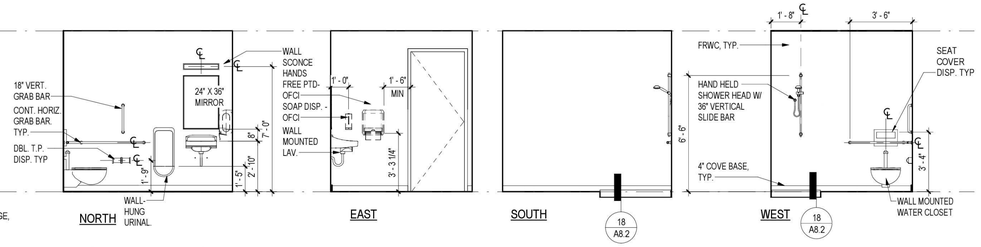

5 121 BAY TOILET

Scale: 1/4" = 1'-0"

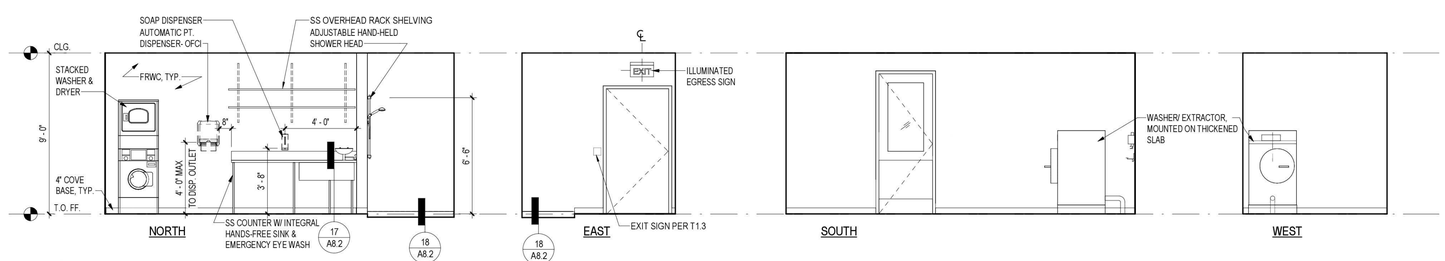

6 122 DECON

Scale: 1/4" = 1'-0"

TCA
ARCHITECTURE + PLANNING + DESIGN
6211 ROOSEVELT WAY
NORTHEAST
SEATTLE, WA 98115
tel: (206) 522-3830
fax: (206) 522-2456

6235 REGISTERED ARCHITECT
BRIAN J. HARRIS
STATE OF WASHINGTON

July 21, 2020

BID SET

No.	Description	Date:

Project Title:

Fire Station 24

City of Kirkland
Kirkland, Washington

Sheet Title:

INTERIOR ELEVATIONS

Scale: 1/4" = 1'-0"
Project No. : 16-46
Date : July 21, 2020

Sheet Number :

A7.4

C:\Users\christine\Documents\16-46 Kirkland 24_CENTRAL_christineGTSPN.rvt

Provided to Builders Exchange of WA, Inc. For usage Conditions Agreement see www.bxwa.com - Always Verify Scal

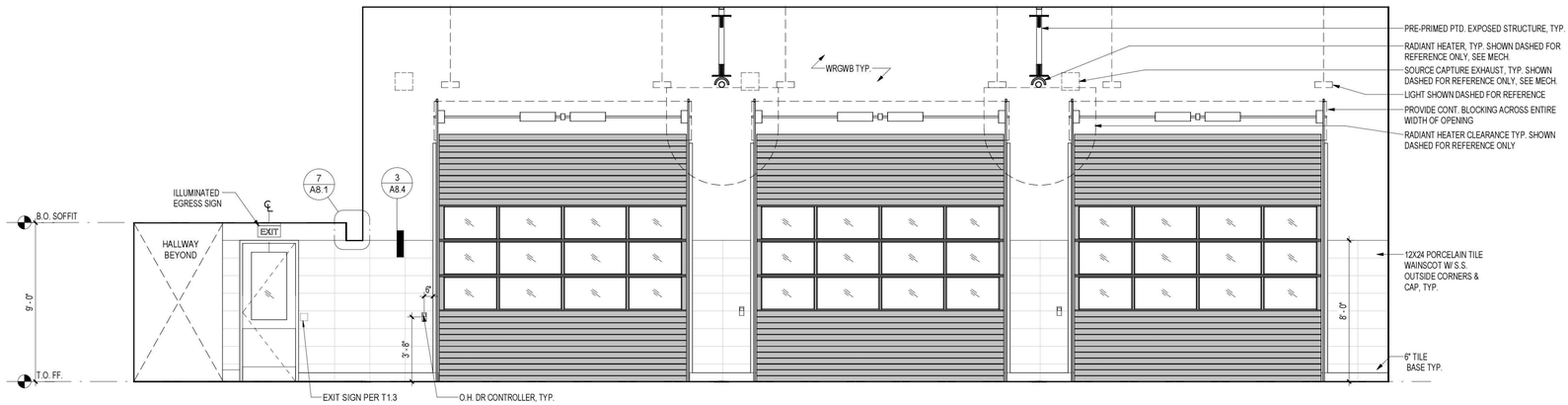

1 120 APPARATUS ROOM NORTH
Scale: 1/4" = 1'-0"

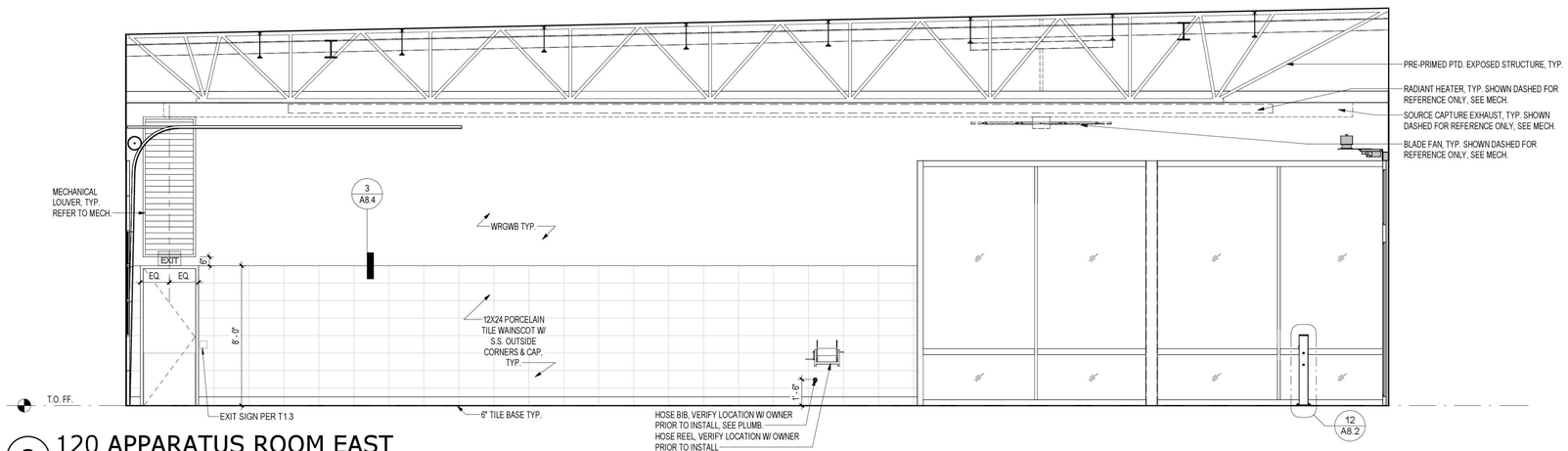

2 120 APPARATUS ROOM EAST
Scale: 1/4" = 1'-0"

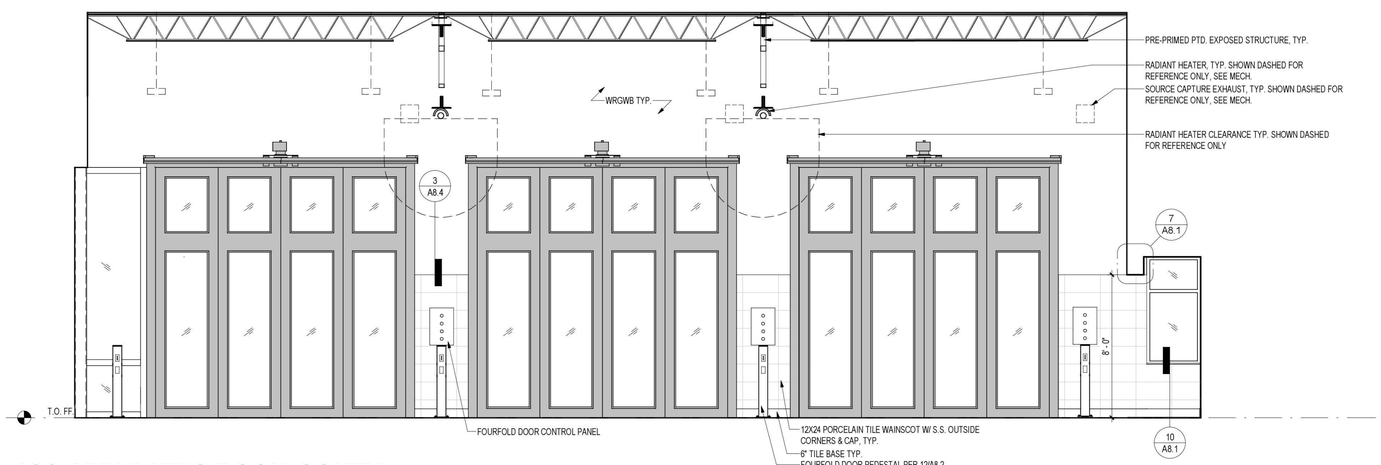

3 120 APPARATUS ROOM SOUTH
Scale: 1/4" = 1'-0"

C:\Users\christinel\Documents\16-46 Kirkland 24_CENTRALx_christineGTSPN.rvt

Provided to Builders Exchange of WA, Inc. For usage Conditions Agreement see www.bxwa.com - Always Verify Scal

T C A
ARCHITECTURE + PLANNING + DESIGN
6211 ROOSEVELT WAY NORTHEAST
SEATTLE, WA 98115
tel: (206) 522-3830
fax: (206) 522-2456

6235 REGISTERED ARCHITECT
BRIAN J. HARRIS
STATE OF WASHINGTON

July 21, 2020

BID SET

No.	Description	Date:

Project Title:

Fire Station 24
City of Kirkland
Kirkland, Washington

Sheet Title:

INTERIOR ELEVATIONS

Scale: 1/4" = 1'-0"
Project No. : 16-46
Date : July 21, 2020

Sheet Number :

A7.5

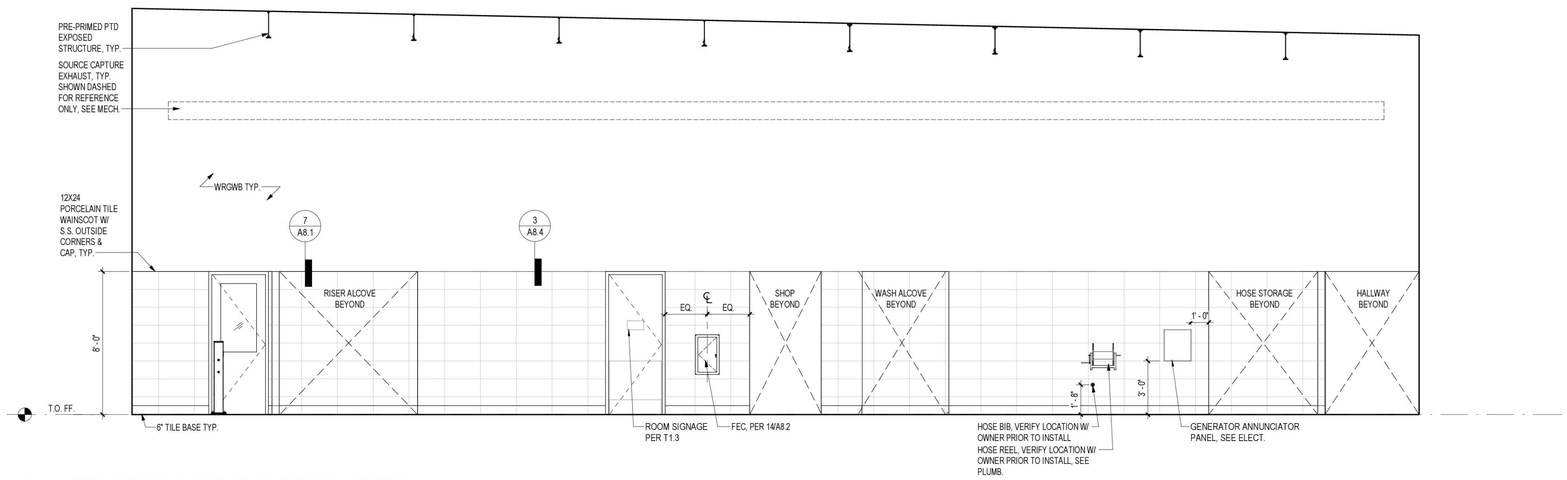

1 120 APPARATUS ROOM WEST

Scale: 1/4" = 1'-0"

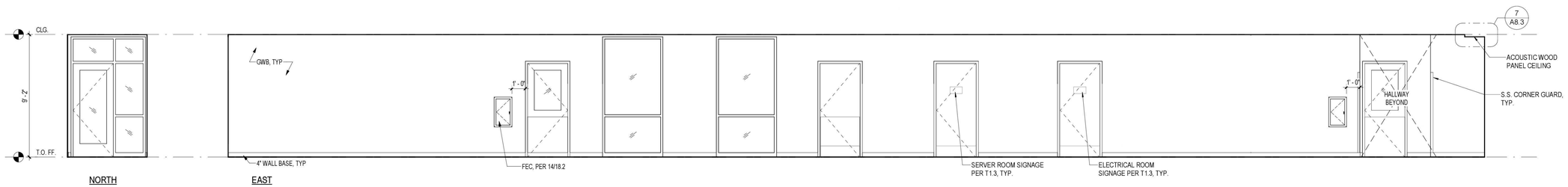

2 123 HALLWAY

Scale: 1/4" = 1'-0"

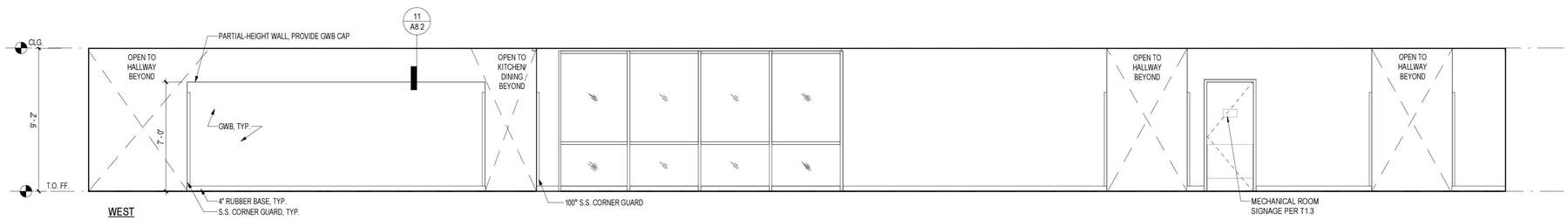

3 123 HALLWAY CONT.

Scale: 1/4" = 1'-0"

C:\Users\christine\Documents\16-46 Kirkland 24_CENTRAL_x_christineGTSPN.rvt

Provided to Builders Exchange of WA, Inc. For usage Conditions Agreement see www.bxwa.com - Always Verify Scal

T C A
ARCHITECTURE + PLANNING + DESIGN
6211 ROOSEVELT WAY NORTHEAST
SEATTLE, WA 98115
tel: (206) 522-3830
fax: (206) 522-2456

6235 REGISTERED ARCHITECT
BRIAN J. HARRIS
STATE OF WASHINGTON

July 21, 2020

BID SET

No.	Description	Date:

Project Title:

Fire Station 24
City of Kirkland
Kirkland, Washington

Sheet Title:

INTERIOR ELEVATIONS

Scale: 1/4" = 1'-0"
Project No. : 16-46
Date : July 21, 2020

Sheet Number :

A7.6

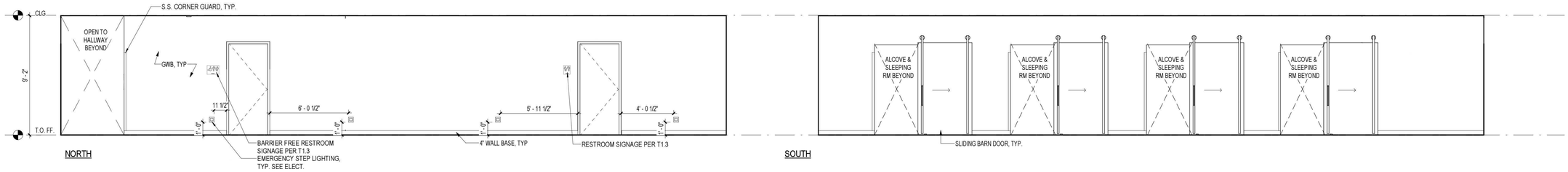

1 128 HALLWAY

Scale: 1/4" = 1'-0"

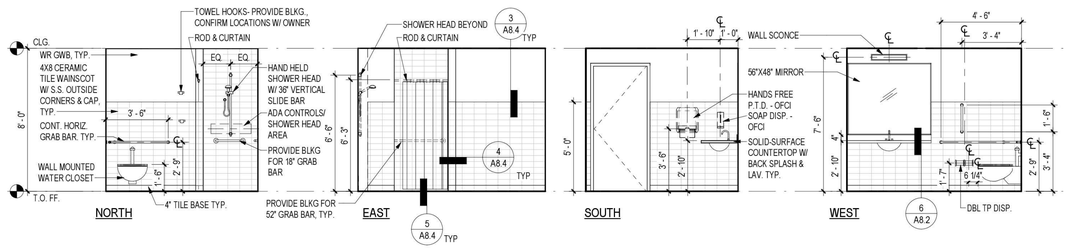

2 130 ADA TOILET AND SHOWER, 131 SIM.

Scale: 1/4" = 1'-0"

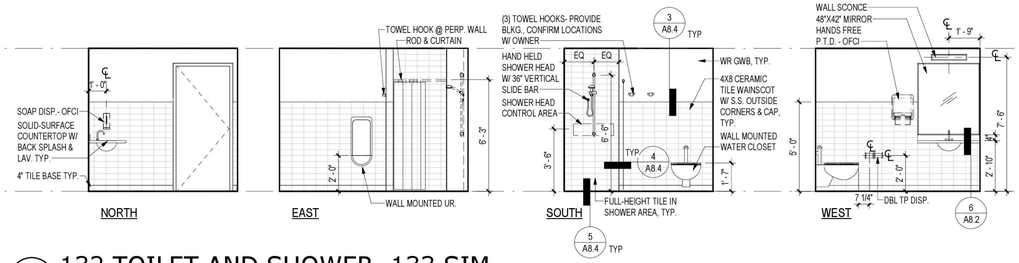

3 132 TOILET AND SHOWER, 133 SIM.

Scale: 1/4" = 1'-0"

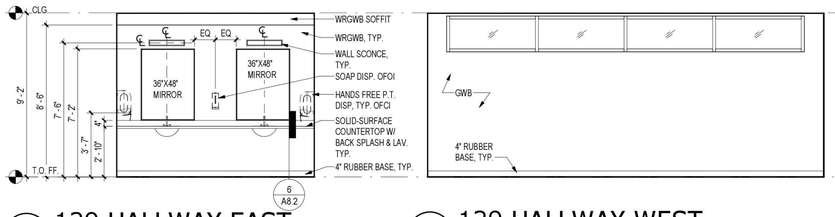

4 129 HALLWAY EAST

Scale: 1/4" = 1'-0"

5 129 HALLWAY WEST

Scale: 1/4" = 1'-0"

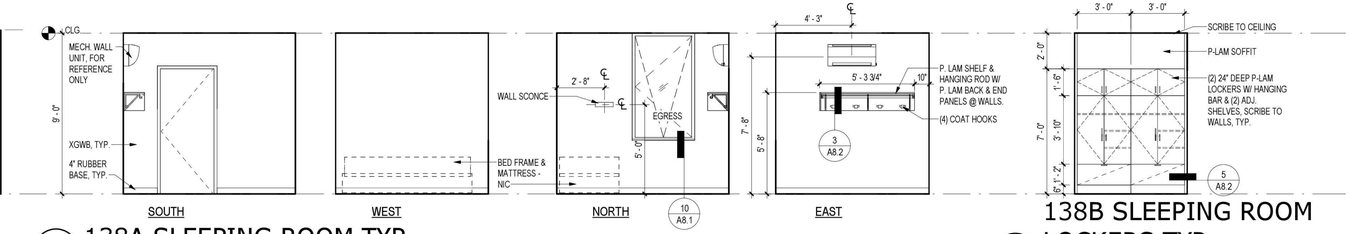

6 138A SLEEPING ROOM TYP.

Scale: 1/4" = 1'-0"

7 138B SLEEPING ROOM LOCKERS TYP.

Scale: 1/4" = 1'-0"

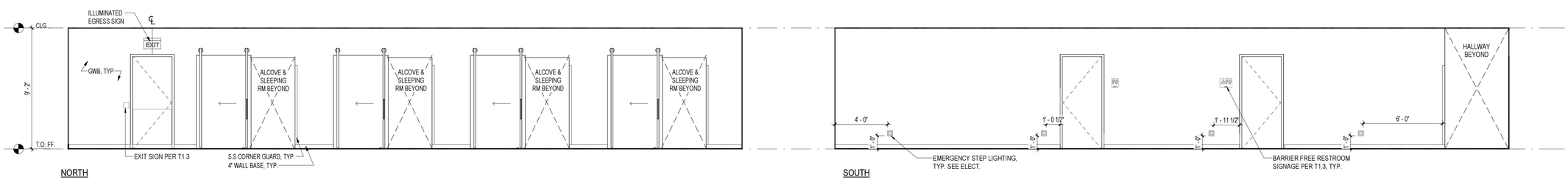

8 135 HALLWAY

Scale: 1/4" = 1'-0"

TCA
ARCHITECTURE + PLANNING + DESIGN
6211 ROOSEVELT WAY
NORTHEAST
SEATTLE, WA 98115
tel: (206) 522-3830
fax: (206) 522-2456

6235 REGISTERED ARCHITECT
BRIAN J. HARRIS
STATE OF WASHINGTON

July 21, 2020

BID SET

No.	Description	Date:

Project Title:

Fire Station 24

City of Kirkland
Kirkland, Washington

Sheet Title:

INTERIOR ELEVATIONS

Scale: 1/4" = 1'-0"
Project No. : 16-46
Date : July 21, 2020

Sheet Number :

A7.7

C:\Users\christine\Documents\16-46 Kirkland 24_CENTRAL\x_christineGTSPN.rvt

Provided to Builders Exchange of WA, Inc. For usage Conditions Agreement see www.bxwa.com - Always Verify Scal

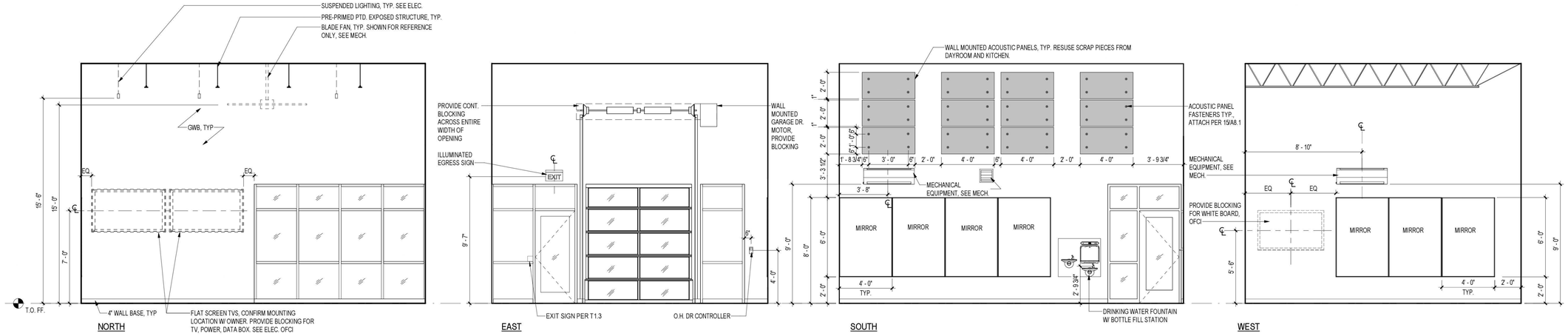

1 140 EXERCISE

Scale: 1/4" = 1'-0"

TCA

ARCHITECTURE + PLANNING + DESIGN

6211 ROOSEVELT WAY
NORTHEAST
SEATTLE, WA 98115
tel: (206) 522-3830
fax: (206) 522-2456

6235 REGISTERED ARCHITECT
BRIAN J. HARRIS
STATE OF WASHINGTON

July 21, 2020

BID SET

No.	Description	Date:

Project Title:

Fire Station 24

City of Kirkland
Kirkland, Washington

Sheet Title:

INTERIOR ELEVATIONS

Scale: 1/4" = 1'-0"
Project No. : 16-46
Date : July 21, 2020

Sheet Number :

A7.8

C:\Users\christine\Documents\16-46 Kirkland 24_CENTRAL_x_christineGTSPN.rvt

Provided to Builders Exchange of WA, Inc. For usage Conditions Agreement see www.bxwa.com - Always Verify Scal

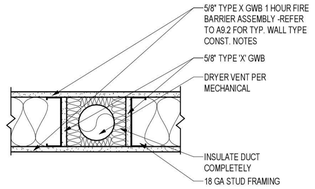

NOTE: PROVIDE FIRE RATED SEALANT COMPLETELY AROUND DUCT PENETRATION AT ROOF STRUCTURE BLKG

16 RATED WALL PENETRATION 5
Scale: 1 1/2" = 1'-0"

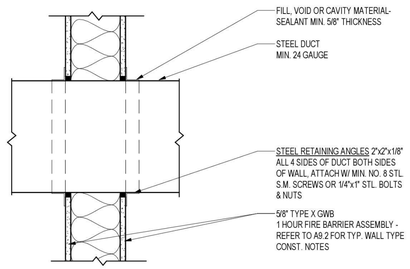

NOTE: ONE-HOUR RATED WALL METAL DUCT PENETRATION PER U.L. SYSTEM NO. W-L-7003.

12 RATED WALL PENETRATION 1
Scale: 1 1/2" = 1'-0"

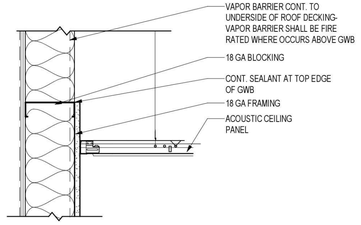

NOTE:
- REFER TO A2.1, A5.1, & A9.2 FOR WALL TYPE CONST. NOTES & DIMS.
- REFER TO 2/A8.1 FOR ACP EDGE NOTES & DIMS.

8 ACP @ PERIMETER WALLS
Scale: 1 1/2" = 1'-0"

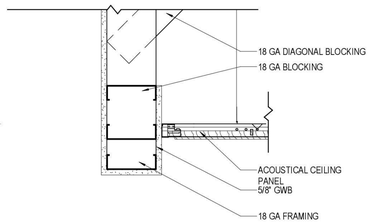

4 BULKHEAD WALL @ ACP CLG
Scale: 1 1/2" = 1'-0"

GENERAL NOTES
1. REFER TO A9.2 FOR INTERIOR WALL ASSEMBLIES.
2. REFER TO A9.4 FOR INTERIOR WALL FINISHES..
3. REFER TO A6.1 FOR CEILING HEIGHTS.

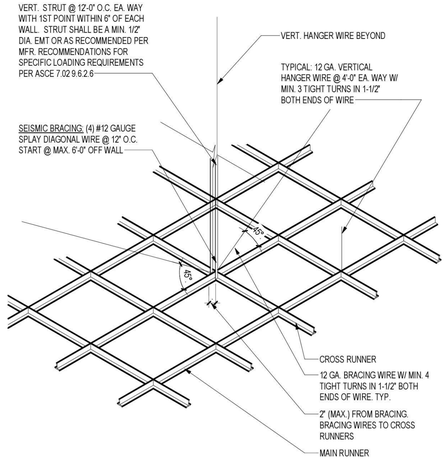

NOTES:
1. USE A HEAVY DUTY T-BAR GRID SYSTEMS AS REQUIRED BY ASCE 7.02 9.6.2 6.2.2.a FOR SEISMIC ZONES 3-4
2. PROVIDE A PERIMETER ANGLE THAT MUST BE GREATER OR EQUAL TO 3/4". TWO ADJACENT WALLS MUST BE ATTACHED TO THE PERIMETER ANGLE, THE OTHER TWO WALLS MUST BE FREE TO SLIDE AND HAVE A 3/4" CLEARANCE. SEE DETAIL 2/A8.1
3. LIGHT FIXTURES AND AIR TERMINALS OR SERVICES ARE TO BE POSITIVELY ATTACHED TO GRID AND SUPPORTED PER CISCA RECOMMENDATIONS FOR SEISMIC ZONES 3-4 (REF. ASCE 7.02 9.6-17).
4. PROVIDE: 12 GA. WIRE PERIMETER HANGERS SPACED 8' FROM WALLS TYP.

1 ACP AXONOMETRIC
Scale: 1/8" = 1'-0"

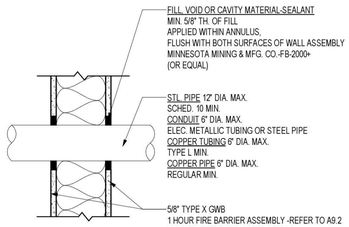

ONE-HOUR RATED WALL METAL PIPE/ CONDUIT PENETRATION PER U.L. SYSTEM NO. W-L-1084.

17 RATED WALL PENETRATION 4
Scale: 1 1/2" = 1'-0"

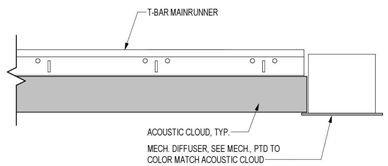

13 ACOUSTIC CLOUD @ DIFFUSER
Scale: 3" = 1'-0"

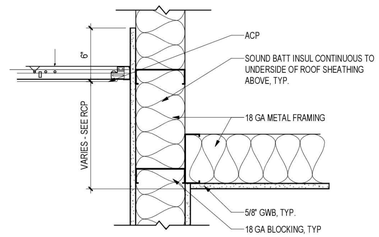

NOTE:
-REFER TO WALL TYPES ON A2.1 & A9.2 FOR WALL CONST. NOTES.

9 TOP OF NONBEARING WALL
Scale: 1 1/2" = 1'-0"

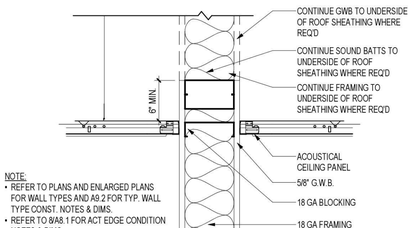

NOTE:
- REFER TO PLANS AND ENLARGED PLANS FOR WALL TYPES AND A9.2 FOR TYP. WALL TYPE CONST. NOTES & DIMS.
- REFER TO 8/A8.1 FOR ACT EDGE CONDITION NOTES & DIMS.

5 TOP OF WALL AT ACP CEILING
Scale: 1 1/2" = 1'-0"

ONE-HOUR RATED WALL NONMETALLIC PIPE PENETRATION PER ICBO ER-5050 FIG. 6.

18 RATED WALL PENETRATION 3
Scale: 1 1/2" = 1'-0"

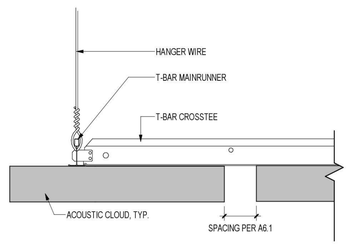

14 SUSPENDED ACOUSTIC CLOUD
Scale: 3" = 1'-0"

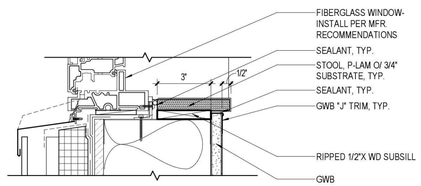

10 TYPICAL WINDOW SILL
Scale: 3" = 1'-0"

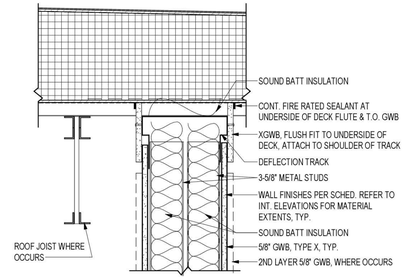

NOTE:
- REFER TO A9.2 FOR NOTES REGARDING CONSTRUCTION OF RATED WALLS
- REFER TO PLANS AND ENLARGED PLANS FOR WALL TYPES AND A9.2 FOR TYP. WALL TYPE CONST. NOTES & DIMS.

6 TOP OF RATED SOUND WALL
Scale: 1 1/2" = 1'-0"

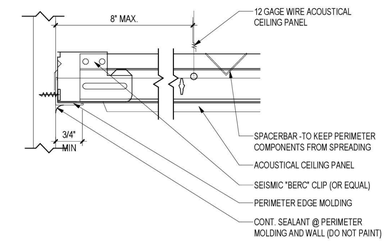

NOTE:
DETAIL SHOWS REQUIRED RELIEF EDGE CONDITION. SYSTEM IS SEISMICALLY ATTACHED WITH CLIP TO MOLDING AT OPPOSITE WALL LOCATIONS.

2 ACP PERIMETER
Scale: 6" = 1'-0"

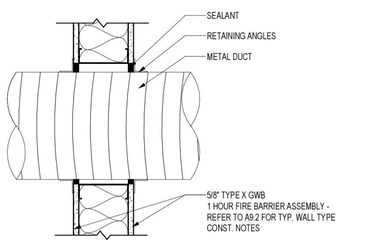

ONE-HOUR RATED WALL METAL DUCT PENETRATION PER U.L. SYSTEM NO.W-L-7021.

19 RATED WALL PENETRATION 2
Scale: 1 1/2" = 1'-0"

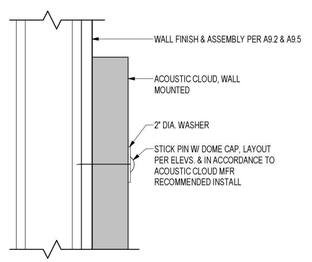

15 WALL MOUNTED ACOUSTIC CLOUD
Scale: 3" = 1'-0"

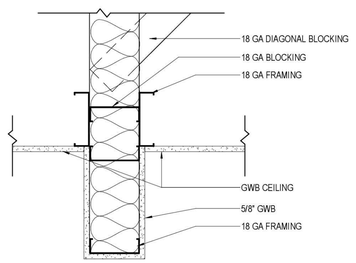

11 GWB HEADER
Scale: 1 1/2" = 1'-0"

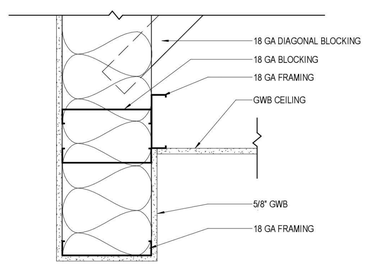

7 BULKHEAD @ GWB CEILING
Scale: 1 1/2" = 1'-0"

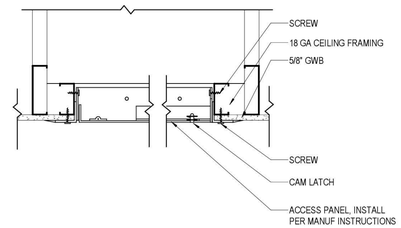

3 CEILING ACCESS PANEL
Scale: 1 1/2" = 1'-0"

T C A
ARCHITECTURE + PLANNING + DESIGN
6211 ROOSEVELT WAY NORTHEAST
SEATTLE, WA 98115
tel: (206) 522-3830
fax: (206) 522-2456
6235 REGISTERED ARCHITECT
BRIAN J. HARRIS STATE OF WASHINGTON
July 21, 2020

BID SET

No.	Description	Date:

Project Title:

Fire Station 24
City of Kirkland
Kirkland, Washington

Sheet Title:

INTERIOR DETAILS

Scale: As indicated
Project No. : 16-46
Date : July 21, 2020

Sheet Number :

A8.1

C:\Users\christine\Documents\16-46 Kirkland 24_CENTRAL\x_christineGTSPN.rvt

Provided to Builders Exchange of WA, Inc. For usage Conditions Agreement see www.bxwa.com - Always Verify Scal

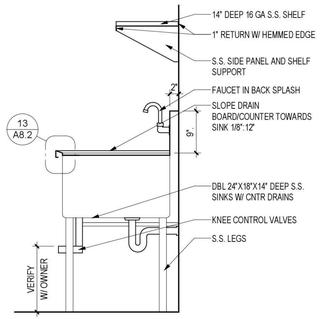

17 DECON SINK

Scale: 3/4" = 1'-0"

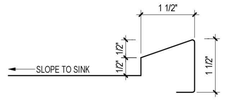

13 DECON SINK LIP PROFILE

Scale: 6" = 1'-0"

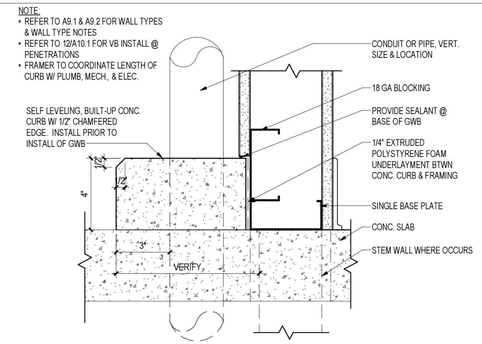

9 SLAB PENETRATION CURB

Scale: 3" = 1'-0"

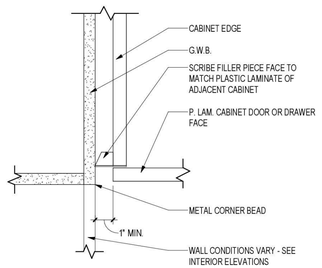

5 CABINET SCRIBE

Scale: 3" = 1'-0"

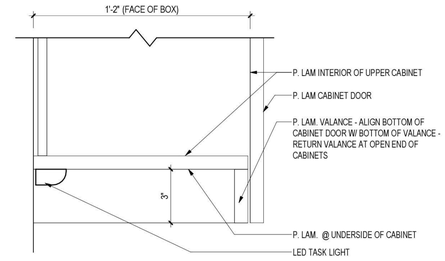

1 LIGHT VALANCE @ UPPER CABINET

Scale: 3" = 1'-0"

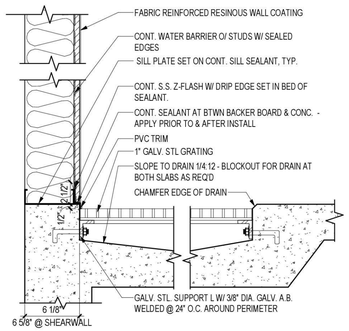

18 WASHOFF SINK SECTION

Scale: 1 1/2" = 1'-0"

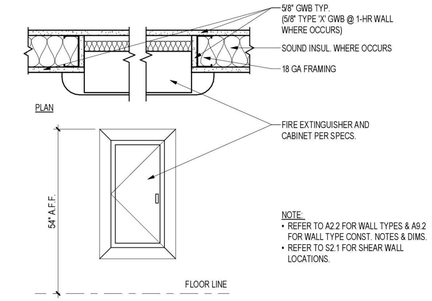

14 FIRE EXTINGUISHER CABINET

Scale: 1 1/2" = 1'-0"

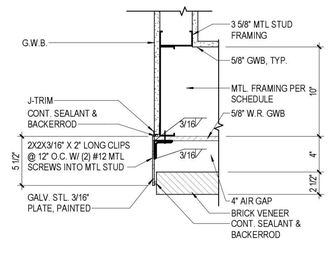

10 INT. CORNER @ INT. BRICK VENEER.

Scale: 1 1/2" = 1'-0"

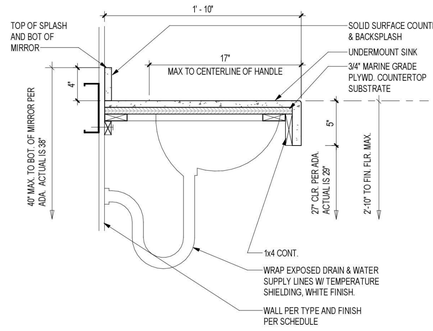

6 SINK SECTION

Scale: 1 1/2" = 1'-0"

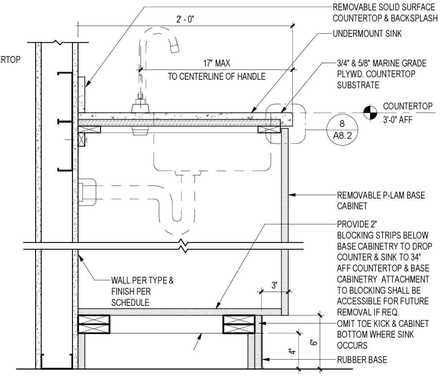

2 KITCHEN BASE CABINET

Scale: 1 1/2" = 1'-0"

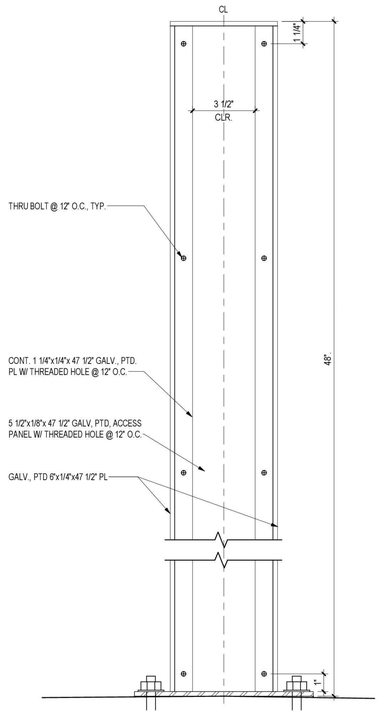

20 FOURFOLD DOOR PEDESTAL BACK ELEVATION

Scale: 3" = 1'-0"

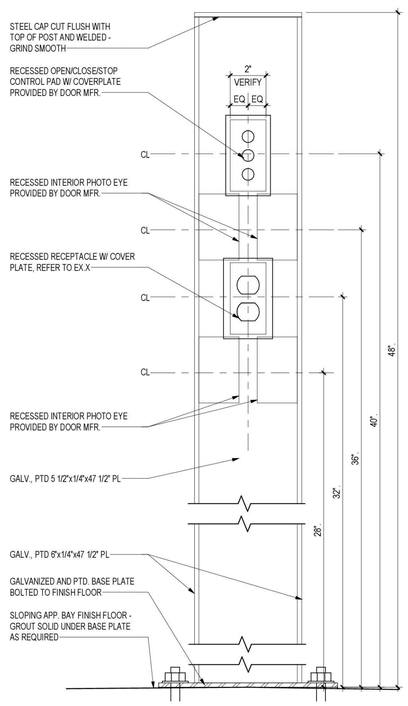

16 FOURFOLD DOOR PEDESTAL FRONT ELEVATION

Scale: 3" = 1'-0"

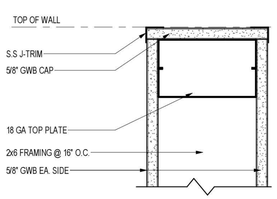

11 WALL CAP

Scale: 3" = 1'-0"

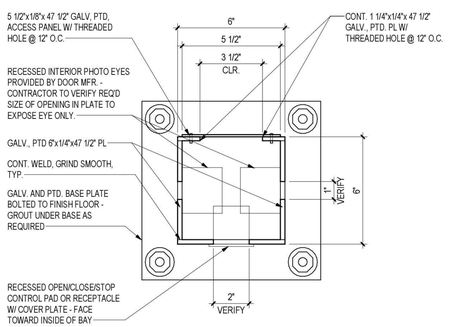

12 FOURFOLD DOOR PEDESTAL PLAN

Scale: 3" = 1'-0"

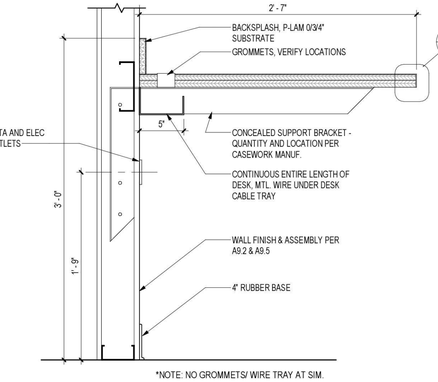

7 P-LAM WORK SURFACE

Scale: 1 1/2" = 1'-0"

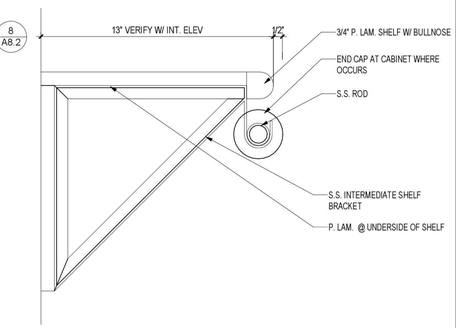

3 SHELF W/ HANGING ROD

Scale: 3" = 1'-0"

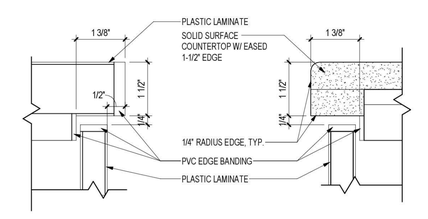

8 COUNTERTOP EDGE

Scale: 6" = 1'-0"

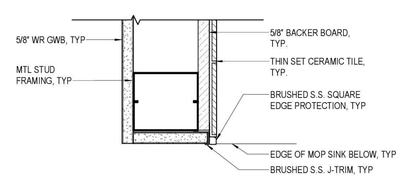

4 MOP SINK END WALL

Scale: 3" = 1'-0"

TCA
ARCHITECTURE + PLANNING + DESIGN
6211 ROOSEVELT WAY NORTHEAST
SEATTLE, WA 98115
tel: (206) 522-3830
fax: (206) 522-2456

6235 REGISTERED ARCHITECT
BRIAN J. HARRIS
STATE OF WASHINGTON

July 21, 2020

BID SET

No.	Description	Date:

Project Title:

Fire Station 24

City of Kirkland
Kirkland, Washington

Sheet Title:

INTERIOR DETAILS

Scale: As indicated
Project No. : 16-46
Date : July 21, 2020

Sheet Number :

A8.2

C:\Users\christine\Documents\16-46 Kirkland 24_CENTRAL\x_christineGTSPN.rvt

Provided to Builders Exchange of WA, Inc. For usage Conditions Agreement see www.bxwa.com - Always Verify Scal

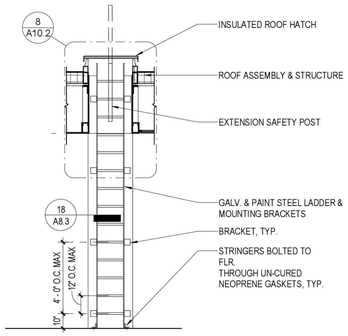

17 ROOF ACCESS LADDER
Scale: 1/4" = 1'-0"

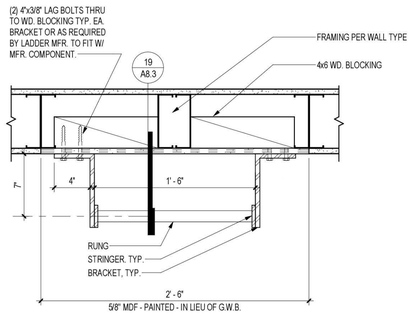

18 ROOF ACCESS LADDER PLAN
Scale: 1 1/2" = 1'-0"

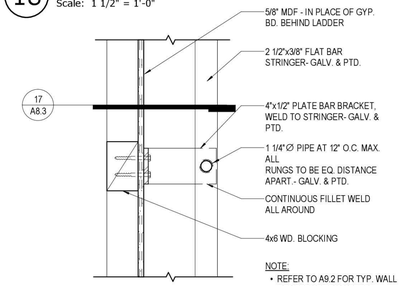

19 ROOF ACCESS LADDER SECTION
Scale: 1 1/2" = 1'-0"

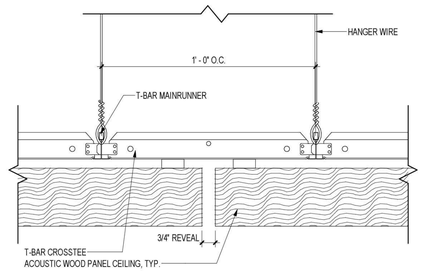

8 ACOUSTIC WOOD PANEL REVEAL
Scale: 3" = 1'-0"

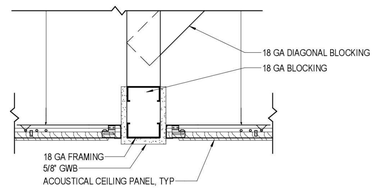

9 HEADER @ ACP CLG
Scale: 1 1/2" = 1'-0"

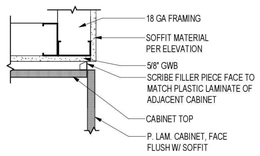

10 CABINET SCRIBE @ SOFFIT
Scale: 1 1/2" = 1'-0"

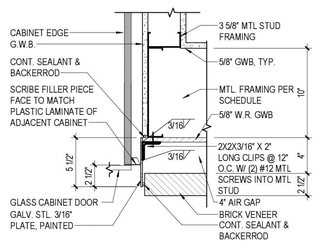

11 SECTION AT DISPLAY CABINET
Scale: 1 1/2" = 1'-0"

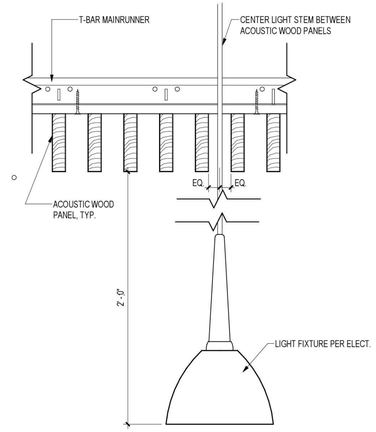

5 KITCHEN LIGHT @ ACOUSTIC WOOD PANEL
Scale: 3" = 1'-0"

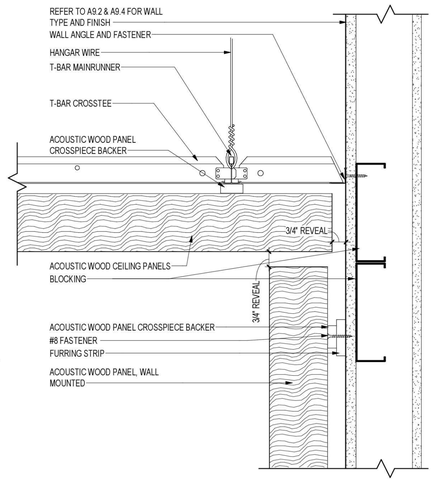

6 ACOUSTIC WOOD PANEL CEILING TO WALL TRANSITION
Scale: 3" = 1'-0"

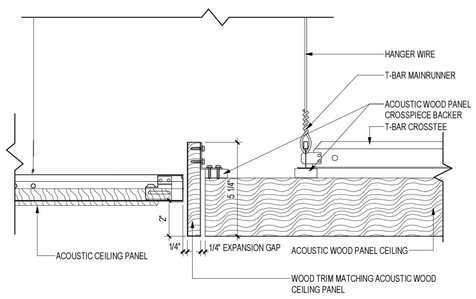

7 ACT TO ACOUSTIC WOOD PANEL
Scale: 3" = 1'-0"

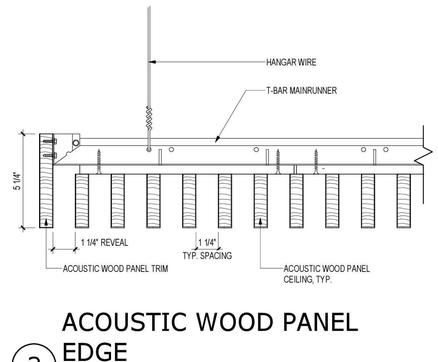

1 ACOUSTIC WOOD PANEL PERIMETER AT WALL
Scale: 3" = 1'-0"

2 ACOUSTIC WOOD PANEL EDGE
Scale: 3" = 1'-0"

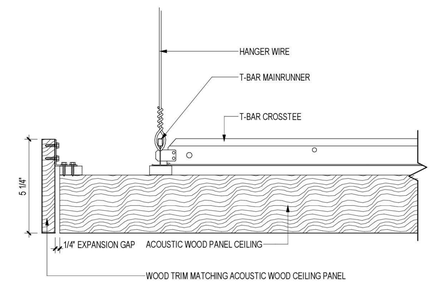

3 ACOUSTIC WOOD PANEL EDGE CUT
Scale: 3" = 1'-0"

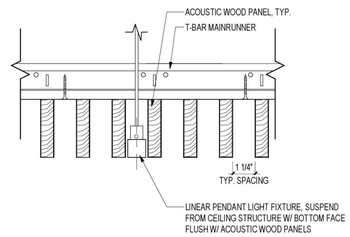

4 LIGHT @ ACOUSTIC WOOD PANEL
Scale: 3" = 1'-0"

TCA
ARCHITECTURE + PLANNING + DESIGN
6211 ROOSEVELT WAY NORTHEAST
SEATTLE, WA 98115
tel: (206) 522-3830
fax: (206) 522-2456

6235 REGISTERED ARCHITECT
BRIAN J. HARRIS
STATE OF WASHINGTON

July 21, 2020

BID SET

No.	Description	Date:

Project Title:

Fire Station 24

City of Kirkland
Kirkland, Washington

Sheet Title:

INTERIOR DETAILS

Scale: As indicated
Project No. : 16-46
Date : July 21, 2020

Sheet Number :

A8.3

C:\Users\christine\Documents\16-46 Kirkland 24_CENTRALx_christineGTSPN.rvt

Provided to Builders Exchange of WA, Inc. For usage Conditions Agreement see www.bxwa.com - Always Verify Scal

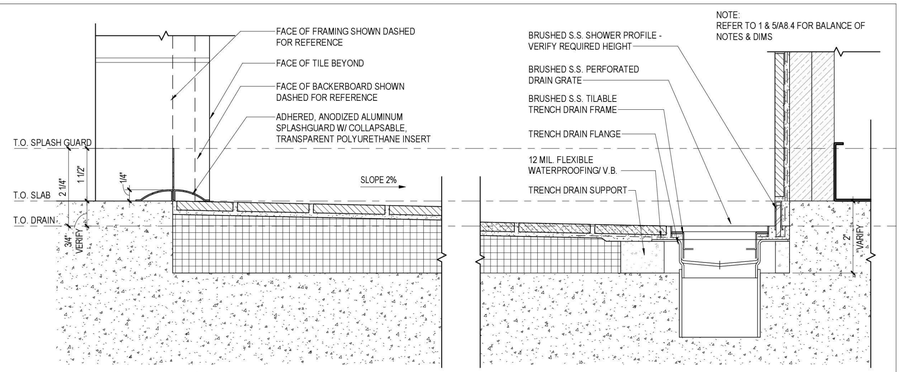

NOTE:
REFER TO 1 & 5/A8.4 FOR BALANCE OF NOTES & DIMS

5 SHOWER SECTION
Scale: 6" = 1'-0"

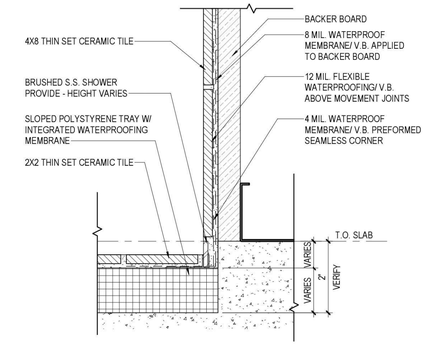

2 SHOWER EDGE
Scale: 6" = 1'-0"

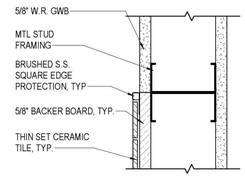

3 TOP OF TILE WAINSCOT
Scale: 3" = 1'-0"

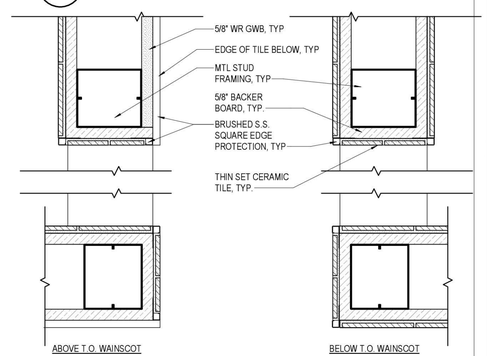

4 SHOWER END WALLS
Scale: 3" = 1'-0"

TCA
ARCHITECTURE + PLANNING + DESIGN
6211 ROOSEVELT WAY NORTHEAST
SEATTLE, WA 98115
tel: (206) 522-3830
fax: (206) 522-2456

6235 REGISTERED ARCHITECT
BRIAN J. HARRIS
STATE OF WASHINGTON

July 21, 2020

BID SET

No.	Description	Date:

Project Title:

Fire Station 24
City of Kirkland
Kirkland, Washington

Sheet Title:

INTERIOR DETAILS

Scale: As indicated
Project No. : 16-46
Date : July 21, 2020

Sheet Number :

A8.4

C:\Users\joel\Documents\16-48 Kirkland 24_CENTRALx_joel@tca-inc.com.rvt

Provided to Builders Exchange of WA, Inc. For usage Conditions Agreement see www.bxwa.com - Always Verify Scal

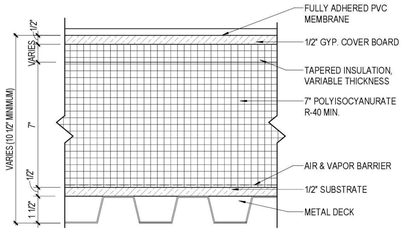

R1 ADHERED MEMBRANE ROOF - TYP.

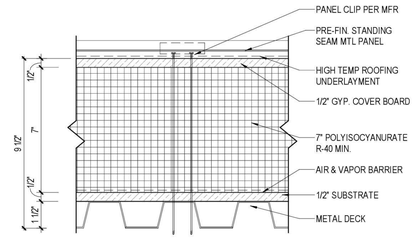

R2 METAL ROOF, TYP.

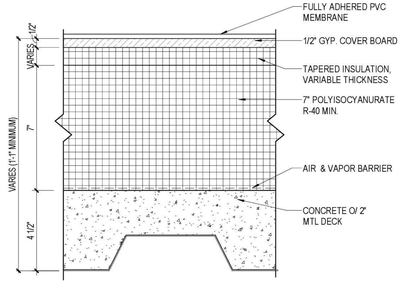

R3 ADHERED MEMBRANE ROOF W/ COMPOSITE CONC. DECK

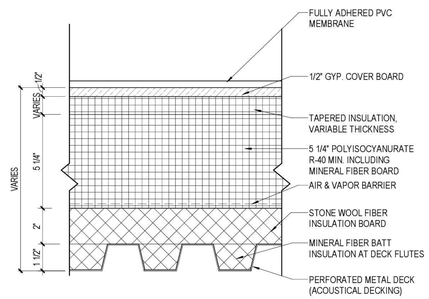

SEE A2.2 FOR PROTECTION LAYER LOCATIONS AT APPARATUS BAY PV ARRAY

R4 ADHERED MEMBRANE ROOF W/ SOUND ISOLATION

NOTE:
1. PROVIDE CLOSED CELL SPRAY FOAM INSULATION WHERE FRAMING CONDITIONS DO NOT ALLOW FOR BATT INSUL.
2. PROVIDE LIQUID APPLIED FLASHING AT ALL MASONRY TIES

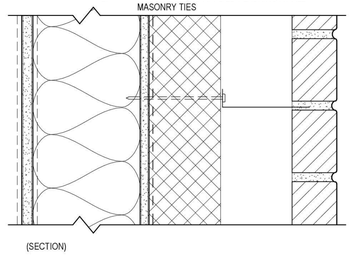

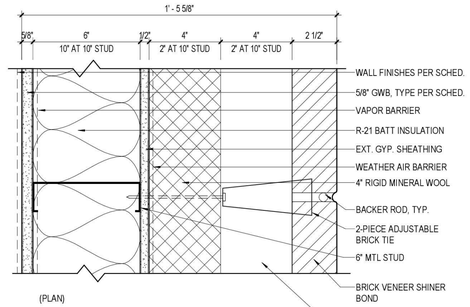

A 6" STUD (R-21 BATT), 4" RIGID MINERAL WOOL, 4" AIR SPACE

B 10" STUD (R-30 BATT), 2" RIGID MINERAL WOOL, 2" AIR SPACE

5 BRICK: 6" & 10" FRAMING (SECTION AND PLAN)

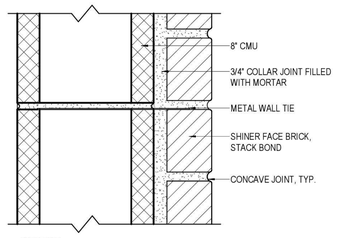

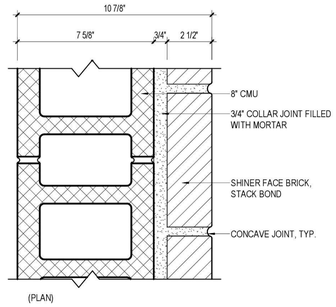

6 CMU YARD WALL (SECTION AND PLAN)

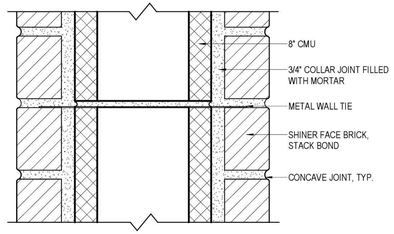

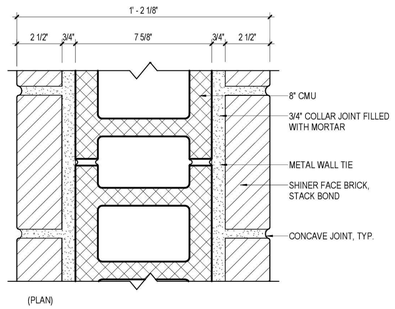

7 GENERATOR TO TRASH WALL (SECTION AND PLAN)

WALL TYPE NOTES
1. WALL TYPES ARE KEYED ON FLOOR PLANS A2.1 AND A5.1
2. PROVIDE FIRE BLOCKING AS REQUIRED PER 2015 I.B.C. SEC. 718. PROVIDE FIRE BLOCKING AT DOUBLE STUD WALLS VERTICALLY AT CEILING AND FLOOR LEVELS AND HORIZONTALLY AT 10'-0" MAX.
3. W.R. GWB REQUIRED AT WET ROOMS.
4. "WET" ROOMS INCLUDE, BUT ARE NOT LIMITED TO: ALL RESTROOMS, KITCHEN, DECON ROOM, CLEANING/ LAUNDRY ROOM, APPARATUS BAY, BUNKER GEAR STORAGE ROOM
5. LOCATIONS MAY HAVE (2) WET SIDES REQUIRING W.R. GWB @ BOTH SIDES
6. OMIT GWB AT CAVITY SIDE OF WALL WHERE OCCURS.
7. PROVIDE 5/8" BACKER BOARD INSIDE WALLS OF SHOWER ENCLOSURES, MOP SINKS AND WASH-OFF ALCOVES
8. SEE DOOR SCHEDULE ON SHEET A9.4 FOR CONDITIONS AT DOORS.
9. SEE ARCH. INT. ELEVATIONS ON SHEETS A7.1-A7.8 FOR EXTENT OF INTERIOR WALL FINISHES.
10. SEE ARCH. EXT. ELEVATIONS ON SHEETS A3.1-A3.2 AND ARCH. BLDG. SECTIONS ON SHEETS A4.1-A4.2 FOR EXTENT OF EXTERIOR WALL FINISHES.
11. SEE FINISH SCHEDULE FOR ADDITIONAL GWB INFORMATION
12. SEE T1.2 FOR FIRE RESISTIVE CONSTRUCTION ASSEMBLY TYPES AND LOCATIONS.

WALL TYPE LEGEND
- **SOUND WALL**: PROVIDE SOUND BATT EXTENDED TO UNDERSIDE OF CEILING AND/ OR ROOF INSULATION ABOVE
- **THERMAL WALL**: PROVIDE R-21 INSUL. AND V.B. EXTENDED (W/ GWB) TO UNDERSIDE OF FLOOR AND/ OR ROOF ASSEMBLY.
- **GA FILE NO. WP 1072** (1 HOUR RATED WALL ASSEMBLY)
- ONE LAYER 5/8" TYPE X GWB APPLIED PARALLEL OR AT RIGHT ANGLE TO EA. SIDE OF STL STUD 24" O.C. W/ TYPE S DRYWALL SCREWS 8" O.C. AT VERTICAL JOINTS AND 12" O.C. AT FLOOR AND CEILING RUNNERS AND INTERMEDIATE STUDS
- JOINTS STAGGERED 24" ON EACH SIDE AND ON OPPOSITE SIDES.
- **GA FILE NO. WP 0700** (1/2 HOUR RATED)
- ONE LAYER 5/8" TYPE X GWB APPLIED PARALLEL OR AT RIGHT ANGLES TO EA. SIDE OF STL STUDS 24" O.C. W/ TYPE S DRYWALL SCREWS
- VERT. JOINTS CENTERED OVER STUDS & STAGGERED ON STUD CAVITY ON OPP. SIDES. HORIZ. JOINTS NEED NOT BE STAGGERED OR BACKED

NOTE:
1. ASSEMBLIES ARE PROVIDED AS MINIMUM REQUIREMENTS PER THE GYPSUM ASSOCIATION PUBLICATION GA-600-2009 FIRE RESISTANCE DESIGN MANUAL AND GA-610-02 AND DO NOT LIMIT OTHER STRICTER REQUIREMENTS OF THE CONTRACT DOCUMENTS INCLUDING BUT NOT LIMITED TO FINISHES, CEMENT-BASED UNDERLAYMENT, INSULATION, AND STRUCTURAL ELEMENTS.

NOTE:
1. PROVIDE CLOSED CELL SPRAY FOAM INSULATION WHERE FRAMING CONDITIONS DO NOT ALLOW FOR BATT INSUL.
2. THERMAL BRACKET SHALL BE INSTALLED AFTER WRB - SEAL ALL WALL PENETRATIONS & WET SET BASE OF THERMAL BRACKET

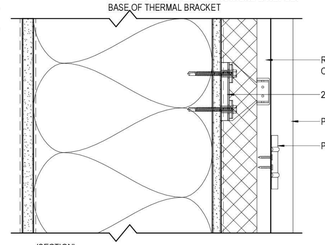

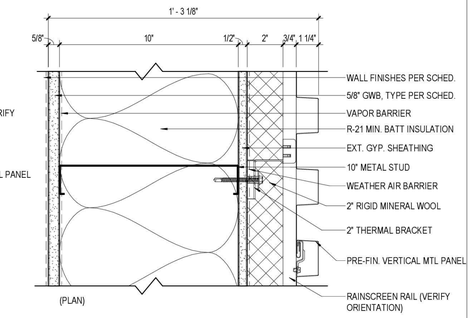

1 VERTICAL METAL PANEL: 10" BRACE FRAME (SECTION AND PLAN)

NOTE:
1. PROVIDE CLOSED CELL SPRAY FOAM INSULATION WHERE FRAMING CONDITIONS DO NOT ALLOW FOR BATT INSUL.
2. THERMAL BRACKET SHALL BE INSTALLED AFTER WRB - SEAL ALL WALL PENETRATIONS & WET SET BASE OF THERMAL BRACKET

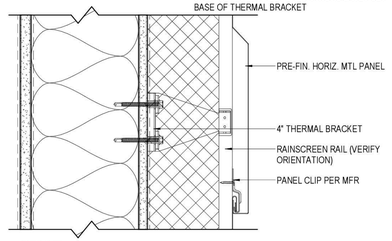

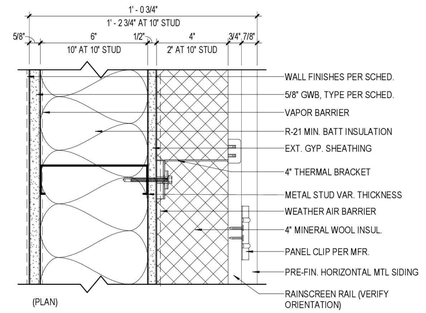

A 6" STUD (R-21 BATT), 4" RIGID MINERAL WOOL

B 10" STUD (R-30 BATT), 2" RIGID MINERAL WOOL 2" THERMAL BRACKET

2 HORIZONTAL METAL PANEL: 6" & 10" FRAMING (SECTION AND PLAN)

NOTE:
1. PROVIDE CLOSED CELL SPRAY FOAM INSULATION WHERE FRAMING CONDITIONS DO NOT ALLOW FOR BATT INSUL.
2. THERMAL BRACKET SHALL BE INSTALLED AFTER WRB - SEAL ALL WALL PENETRATIONS & WET SET BASE OF THERMAL BRACKET

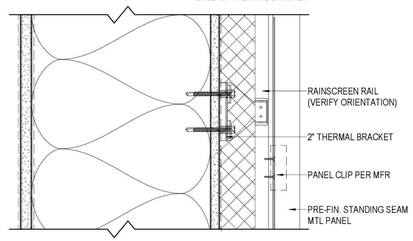

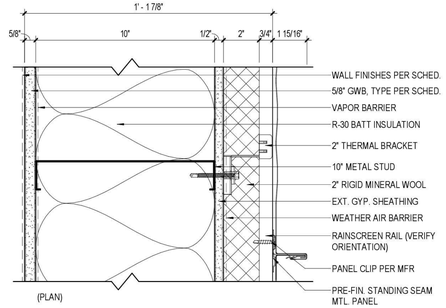

3 STANDING SEAM METAL PANEL: 10" FRAMING (SECTION AND PLAN)

NOTE:
1. PROVIDE CLOSED CELL SPRAY FOAM INSULATION WHERE FRAMING CONDITIONS DO NOT ALLOW FOR BATT INSUL.
2. THERMAL BRACKET SHALL BE INSTALLED AFTER WRB - SEAL ALL WALL PENETRATIONS & WET SET BASE OF THERMAL BRACKET

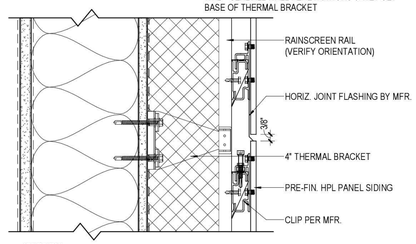

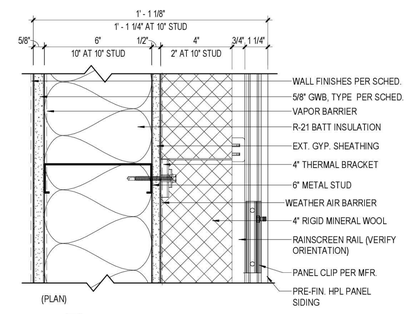

A 6" STUD (R-21 BATT), 4" RIGID MINERAL WOOL

B 10" STUD (R-30 BATT), 2" RIGID MINERAL WOOL 2" THERMAL BRACKET

4 HPL: 6" & 10" FRAMING (SECTION AND PLAN)

TCA
ARCHITECTURE + PLANNING + DESIGN
6211 ROOSEVELT WAY NORTHEAST
SEATTLE, WA 98115
tel: (206) 522-3830
fax: (206) 522-2456

6235 REGISTERED ARCHITECT
BRIAN J. HARRIS
STATE OF WASHINGTON

July 21, 2020

BID SET

No.	Description	Date:

Project Title:

Fire Station 24

City of Kirkland
Kirkland, Washington

Sheet Title:

EXTERIOR ENVELOPE TYPES

Scale: 3" = 1'-0"
Project No. : 16-46
Date : July 21, 2020

Sheet Number :

A9.1

C:\Users\michelle\Documents\16-46 Kirkland 24_CENTRAL.x_michelle@tca-inc.com.rvt

Provided to Builders Exchange of WA, Inc. For usage Conditions Agreement see www.bxwa.com - Always Verify Scal

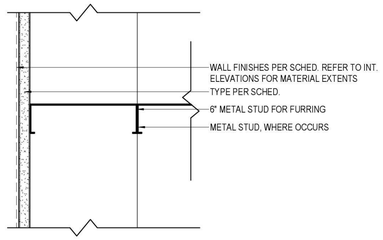

J FURRING WALL (PLAN)

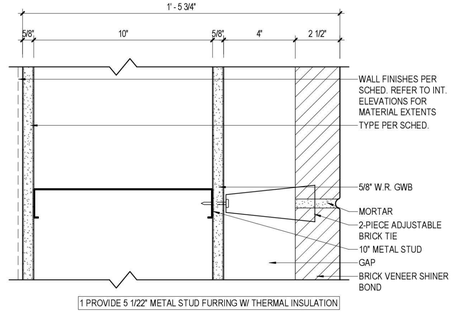

E 10" W/ BRICK FACE (PLAN)

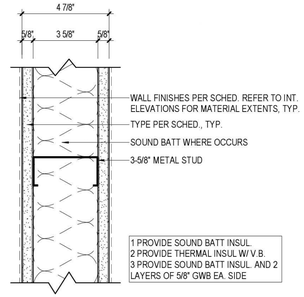

A 3-5/8" METAL STUD (PLAN)

WALL TYPE NOTES
1. WALL TYPES ARE KEYED ON FLOOR PLANS A2.1 AND A5.1
2. PROVIDE FIRE BLOCKING AS REQUIRED PER 2015 I.B.C. SEC. 718. PROVIDE FIRE BLOCKING AT DOUBLE STUD WALLS VERTICALLY AT CEILING AND FLOOR LEVELS AND HORIZONTALLY AT 10'-0" MAX.
3. BACKER BOARD IS REQUIRED BEHIND CERAMIC TILE AND FRWC, SEE FINISH SCHED. INT. ELEVATION AND SECTIONS FOR LOCATIONS
4. "WET" ROOMS INCLUDE, BUT ARE NOT LIMITED TO: ALL RESTROOMS, KITCHEN, DECON ROOM, CLEANING/ LAUNDRY ROOM, APPARATUS BAY, BUNKER GEAR STORAGE ROOM
5. LOCATIONS MAY HAVE (2) WET SIDES REQUIRING W.R. GWB @ BOTH SIDES
6. OMIT GWB AT CAVITY SIDE OF WALL WHERE OCCURS
7. PROVIDE 5/8" BACKER BOARD INSIDE WALLS OF SHOWER ENCLOSURES, MOP SINKS AND WASH-OFF ALCOVES
8. SEE DOOR SCHEDULE ON SHEET A9.3 FOR CONDITIONS AT DOORS.
9. SEE ARCH. INT. ELEVATIONS ON SHEETS A7.1-A7.6 AND ARCH. BLDG. SECTIONS ON SHEETS A4.1-A4.2 FOR EXTENT OF INTERIOR WALL FINISHES.
10. SEE ARCH. EXT. ELEVATIONS ON SHEETS A3.1 AND ARCH. BLDG. SECTIONS ON SHEETS A4.1-A4.2 FOR EXTENT OF EXTERIOR WALL FINISHES.
11. SEE FINISH SCHEDULE FOR ADDITIONAL GWB INFORMATION
12. SEE T1.2 FOR FIRE RESISTIVE CONSTRUCTION ASSEMBLY NOTES & REQUIREMENTS.
13. PARTITION FRAMING SPACING IS 16" O.C.
14. PARTITION FRAMING IS DELEGATED DESIGN - REFER TO SPECIFICATION SECTION 06 40 00

WALL TYPE LEGEND
- **SOUND WALL:** PROVIDE SOUND BATT EXTENDED TO UNDERSIDE OF CEILING AND/ OR ROOF INSULATION ABOVE
- **THERMAL WALL:** PROVIDE R-21 INSUL. AND V.B. EXTENDED (W/ GWB) TO UNDERSIDE OF FLOOR AND/ OR ROOF ASSEMBLY
- **GA FILE NO. WP 1072** (1 HOUR RATED WALL ASSEMBLY)
- ONE LAYER 5/8" TYPE X GWB APPLIED PARALLEL OR AT RIGHT ANGLE TO EA. SIDE OF STL STUD 24" O.C. W/ TYPE S DRYWALL SCREWS 8" O.C. AT VERTICAL JOINTS AND 12" O.C. AT FLOOR AND CEILING RUNNERS AND INTERMEDIATE STUDS
- JOINTS STAGGERED 24" ON EACH SIDE AND ON OPPOSITE SIDES.
- **GA FILE NO. WP 0700** (1/2 HOUR RATED)
- ONE LAYER 5/8" TYPE X GWB APPLIED PARALLEL OR AT RIGHT ANGLES TO EA. SIDE OF STL STUDS 24" O.C. W/ TYPE S DRYWALL SCREWS
- VERT. JOINTS CENTERED OVER STUDS & STAGGERED ON STUD CAVITY ON OPP. SIDES. HORIZ. JOINTS NEED NOT BE STAGGERED OR BACKED

NOTE:
1. ASSEMBLIES ARE PROVIDED AS MINIMUM REQUIREMENTS PER THE GYPSUM ASSOCIATION PUBLICATION GA-600-2009 FIRE RESISTANCE DESIGN MANUAL AND GA-610-02 AND DO NOT LIMIT OTHER STRICTER REQUIREMENTS OF THE CONTRACT DOCUMENTS INCLUDING BUT NOT LIMITED TO FINISHES, CEMENT-BASED UNDERLAYMENT, INSULATION, AND STRUCTURAL ELEMENTS.

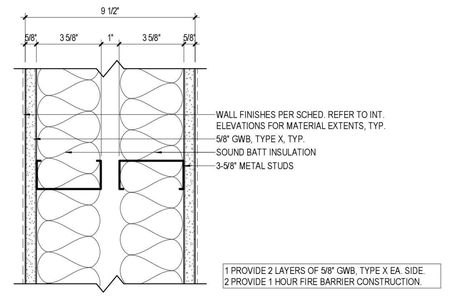

F 1/2 HR FIRE PARTITION (PLAN)

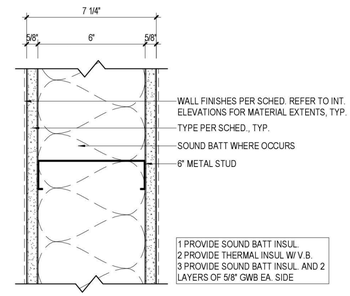

B 6" METAL STUD (PLAN)

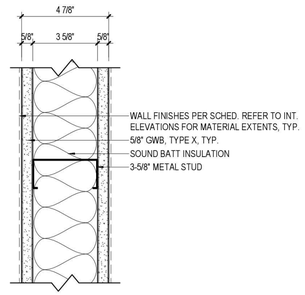

G 1 HR FIRE BARRIER (PLAN)

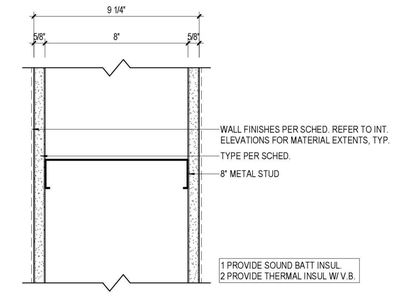

C 8" METAL STUD (PLAN)

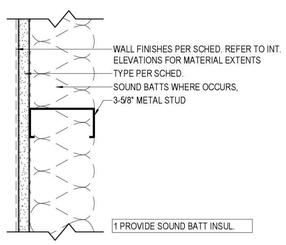

H PLUMBING CHASE WALL (PLAN)

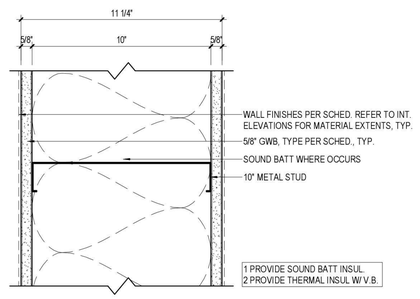

D 10" METAL STUD @ BRACE FRAME (PLAN)

TCA
ARCHITECTURE + PLANNING + DESIGN
6211 ROOSEVELT WAY NORTHEAST
SEATTLE, WA 98115
tel: (206) 522-3830
fax: (206) 522-2456

6235 REGISTERED ARCHITECT
BRIAN J. HARRIS
STATE OF WASHINGTON

July 21, 2020

BID SET

No.	Description	Date:

Project Title:

Fire Station 24
City of Kirkland
Kirkland, Washington

Sheet Title:

INTERIOR PARTITIONS

Scale: 3" = 1'-0"
Project No. : 16-46
Date : July 21, 2020

Sheet Number :

A9.2

C:\Users\joel\Documents\16-46 Kirkland 24_CENTRALx_joel@tca-inc.com.rvt

Provided to Builders Exchange of WA, Inc. For usage Conditions Agreement see www.bxwa.com - Always Verify Scal

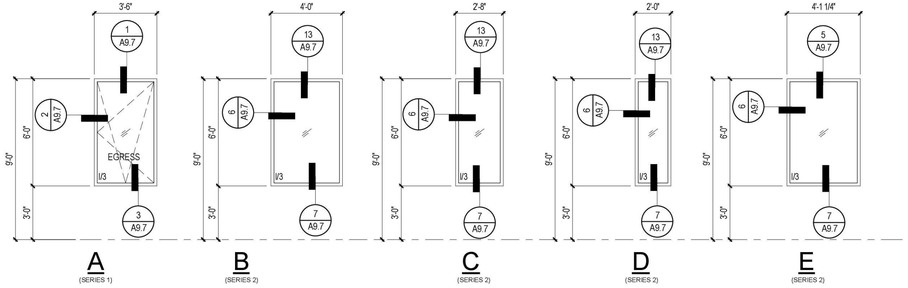

1 FIBERGLASS WINDOW TYPES

Scale: 1/4" = 1'-0"

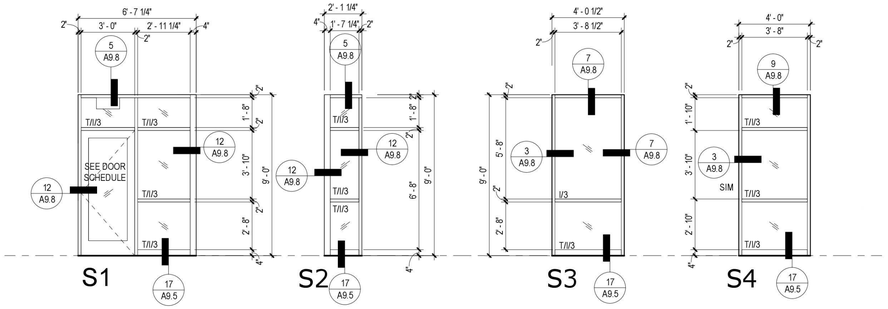

GLAZING LEGEND

T TEMPERED
I INSULATED
2 DOUBLE GLAZING
3 TRIPLE GLAZING

2 EXTERIOR STOREFRONT FRAME TYPES (ALL SERIES 1)

Scale: 1/4" = 1'-0"

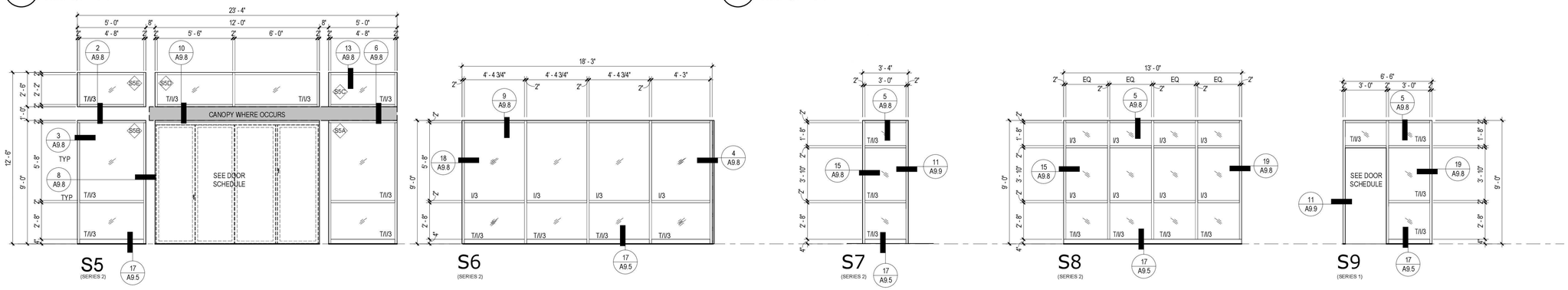

3 FIBERGLASS STOREFRONT FRAME TYPES

Scale: 1/4" = 1'-0"

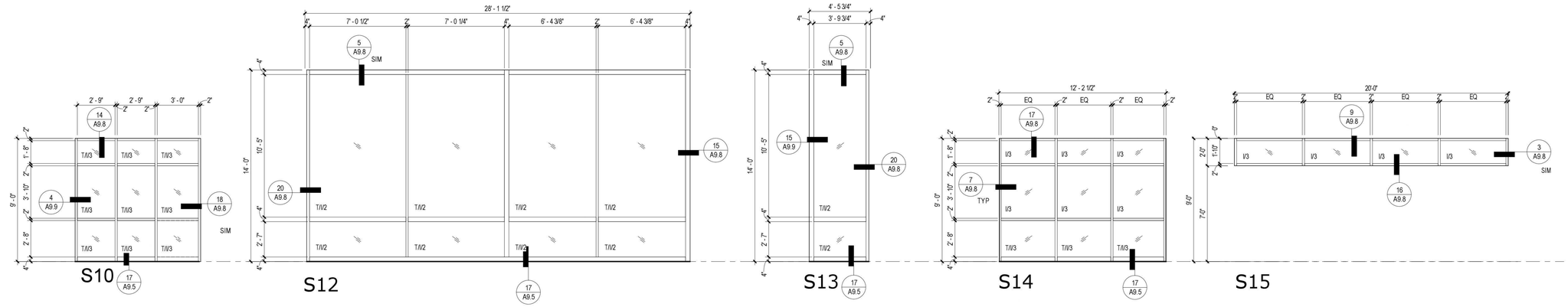

4 FIBERGLASS STOREFRONT FRAME TYPES (ALL SERIES 2)

Scale: 1/4" = 1'-0"

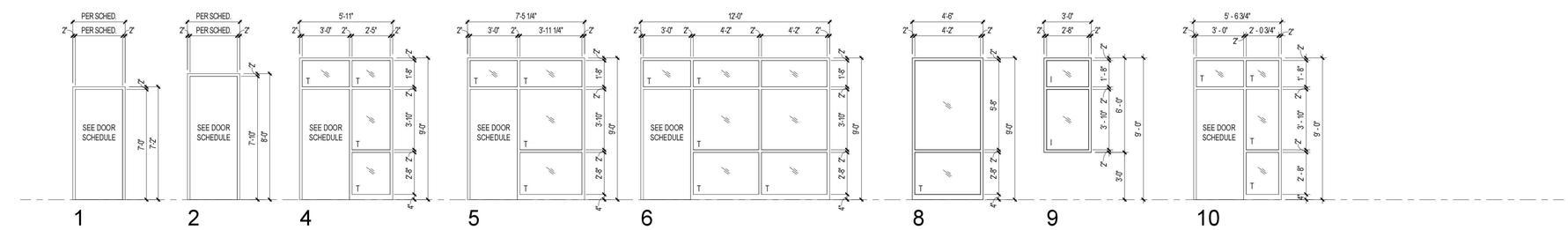

5 HOLLOW MTL FRAME & RELITE TYPES

Scale: 1/4" = 1'-0"

ARCHITECTURE + PLANNING + DESIGN

6211 ROOSEVELT WAY
NORTHEAST
SEATTLE, WA 98115
tel: (206) 522-3830
fax: (206) 522-2456

6235 REGISTERED ARCHITECT
BRIAN J. HARRIS
STATE OF WASHINGTON

July 21, 2020

BID SET

No.	Description	Date:

Project Title:

Fire Station 24

City of Kirkland
Kirkland, Washington

Sheet Title:

DOOR, STOREFRONT & FRAME TYPES

Scale: 1/4" = 1'-0"
Project No. : 16-46
Date : July 21, 2020

Sheet Number :

A9.3

C:\Users\joel\Documents\16-46 Kirkland 24_CENTRAL.x_joel@tca-inc.com.rvt

Provided to Builders Exchange of WA, Inc. For usage Conditions Agreement see www.bxwa.com - Always Verify Scal

DOOR SCHEDULE

	DOOR									FRAME				DETAILS				
MARK	WIDTH	HEIGHT	THICKNESS	TYPE	MATERIAL	FINISH	GLAZING	LABEL	CLOSER	TYPE	MATERIAL	FINISH	GLAZING	HEAD	JAMB	THRESH	REMARKS	HARDWARE SET
000B																	EXTERIOR STEEL GATES - TRASH ENCLOSURE - REF 14/A1.2	
100A	3' - 0"	7' - 0"	1 3/4"	B	SF	FAC	(T/I)	-	YES	S1	SF	FAC	(T/I)	17/A9.8	12/A9.8	13/A9.5	11	EA
101A	3' - 0"	7' - 0"	1 3/4"	B	WD	SV	(T)	-	YES	4	HM	PNT	(T)	16/A9.6	13/A9.6	3/A9.6	3, 11	PS
102A	3' - 0"	7' - 0"	1 3/4"	A	WD	SV	-	-	NO	1	HM	PNT	-	5/A9.6	6/A9.6	-	4	PL
103A	3' - 0"	7' - 0"	1 3/4"	B	WD	SV	(T)	-	YES	6	HM	PNT	(T)	16 & 20/A9.6	14/A9.6	-	11	EA
104A	3' - 0"	7' - 0"	1 3/4"	B	WD	SV	(T)	-	NO	5	HM	PNT	(T)	16 & 20/A9.6	15/A9.6	-	-	PS
106A	5' - 0"	7' - 1"	1 3/4"	D	WD	SV	-	-	NO		-		-	9/A9.6	10/A9.6		-	
107A	12' - 0"	9' - 0"	2 11/32"	H	ALUM	FAC	(T/I)	-		S5	-	FAC	(T/I)	10/A9.8	8/A9.8	19/A9.5	-	EA
108A	3' - 0"	7' - 0"	1 3/4"	A	WD	SV	-	-	NO	1	HM	PNT	-	5/A9.6	6/A9.6	-	4	PL
109A	3' - 0"	7' - 0"	1 3/4"	C	HM	PNT	(T)	-	YES	1	HM	PNT	-	5/A9.6	6/A9.6	3/A9.6	3	PB
109B	3' - 0"	7' - 10"	1 3/4"	C	HM	PNT	(T/I)	-	YES	2	HM	PNT	-	5/A9.6	6/A9.6	3/A9.6	3	PB
112A	3' - 0"	7' - 10"	1 3/4"	A	HM	PNT	-		NO	2	HM	PNT	-	7/A9.6	8/A9.6	4/A9.6	-	EA
113A	3' - 0"	7' - 0"	1 3/4"	A	WD	SV	-		YES	1	HM	PNT	-	5/A9.6	6/A9.6		7, 13	
115A	3' - 0"	7' - 0"	1 3/4"	A	WD	SV	-		YES	1	HM	PNT	-	5/A9.6	6/A9.6		8, 13	
117A	3' - 0"	7' - 0"	1 3/4"	A	WD	SV	-		NO	1	HM	PNT	-	5/A9.6	6/A9.6		-	
118A	3' - 0"	7' - 10"	1 3/4"	C	HM	PNT	(T)		YES	1	HM	PNT	-	5/A9.6	6/A9.6		-	
119A	3' - 0"	7' - 10"	1 3/4"	C	HM	PNT	(T)		YES	1	HM	PNT	-	5/A9.6	6/A9.6	3/A9.6	3	PB
119B	3' - 0"	7' - 0"	1 3/4"	C	HM	PNT	(T)		YES	1	HM	PNT	-	5/A9.6	6/A9.6	3/A9.6	3	PB
120A	14' - 0"	14' - 0"	2"	F	STL	FAC	(T/I)	-	NO	-	STL	PNT	-	5/A9.9	6/A9.9	16/A9.9	1	-
120B	14' - 0"	14' - 0"	2"	F	STL	FAC	(T/I)	-	NO	-	STL	PNT	-	5/A9.9	6/A9.9	16/A9.9	1	-
120C	14' - 0"	14' - 0"	2"	F	STL	FAC	(T/I)	-	NO	-	STL	PNT	-	5/A9.9	6/A9.9	16/A9.9	1	-
120D	3' - 0"	7' - 10"	1 3/4"	A	HM	PNT	-	-	YES	2	HM	PNT	-	17/A9.9	18/A9.9	18/A9.5	11	EA/PB
120E	14' - 0"	14' - 0"	2"	G	STL	FAC	(T/I)	-	NO	-	STL	PNT	-	13/A9.9	14&15/A9.9	16/A9.9	1	-
120F	14' - 0"	14' - 0"	2"	G	STL	FAC	(T/I)	-	NO	-	STL	PNT	-	13/A9.9	14/A9.9	16/A9.9	1	-
120G	14' - 0"	14' - 0"	2"	G	STL	FAC	(T/I)	-	NO	-	STL	PNT	-	13/A9.9	14/A9.9	16/A9.9	1	-
120H	3' - 0"	7' - 10"	1 3/4"	C	HM	PNT	(T/I)		YES	1	HM	PNT	-	7/A9.9	4&8/A9.9	18/A9.5	11	EA
121A	3' - 0"	7' - 10"	1 3/4"	A	HM	PNT	-		NO	2	HM	PNT	-	7/A9.6	8/A9.6	4/A9.6	-	EA
122A	3' - 6"	7' - 0"	1 3/4"	A	HM	PNT	-		YES	1	HM	PNT	-	19/A9.9	20/A9.9	18/A9.5	11	EA
122B	3' - 0"	7' - 10"	1 3/4"	C	HM	PNT	(T)		YES	1	HM	PNT	-	5/A9.6	6/A9.6		-	PB
124A	3' - 0"	7' - 0"	1 3/4"	A	WD	SV	-	3/4 HOUR	YES	1	HM	PNT	-	5/A9.6	6/A9.6	20/A9.5	3	PS
124B	4' - 2"	7' - 1"	1 3/4"	D	WD	SV	-	-	NO	-	-	-	-	9/A9.6	10/A9.6	-	-	-
125A	3' - 0"	7' - 0"	1 3/4"	A	WD	SV	-	3/4 HOUR	YES	1	HM	PNT	-	5/A9.6	6/A9.6	20/A9.5	3	PS
125B	4' - 2"	7' - 1"	1 3/4"	D	WD	SV	-	-	NO	-	-	-	-	9/A9.6	10/A9.6	-	-	-
126A	3' - 0"	7' - 0"	1 3/4"	A	WD	SV	-	3/4 HOUR	YES	1	HM	PNT	-	5/A9.6	6/A9.6	20/A9.5	3	PS
126B	4' - 2"	7' - 1"	1 3/4"	D	WD	SV	-	-	NO	-	-	-	-	9/A9.6	10/A9.6	-	-	-
127A	3' - 0"	7' - 0"	1 3/4"	A	WD	SV	-	3/4 HOUR	YES	1	HM	PNT	-	5/A9.6	6/A9.6	20/A9.5	3	PS
127B	4' - 2"	7' - 1"	1 3/4"	D	WD	SV	-	-	NO	-	-	-	-	9/A9.6	10/A9.6	-	-	-
130A	3' - 0"	7' - 0"	1 3/4"	A	WD	SV	-	-	NO	1	HM	PNT	-	5/A9.6	6/A9.6	-	4	PL
131A	3' - 0"	7' - 0"	1 3/4"	A	WD	SV	-	-	NO	1	HM	PNT	-	11/A9.6	12/A9.6	-	4	PL
132A	3' - 0"	7' - 0"	1 3/4"	A	WD	SV	-	-	NO	1	HM	PNT	-	11/A9.6	12/A9.6	-	5	PL
133A	3' - 0"	7' - 0"	1 3/4"	A	WD	SV	-	-	NO	1	HM	PNT	-	5/A9.6	6/A9.6	-	5	PL
134A	3' - 0"	7' - 0"	1 3/4"	A	WD	SV	-	-	NO	1	HM	PNT	-	11/A9.6	12/A9.6	-	6	PS
136A	3' - 0"	7' - 0"	1 3/4"	A	HM	PNT	-		YES	1	HM	PNT	-	2/A9.9	3/A9.9	18/A9.5	11	
136A	3' - 0"	7' - 0"	1 3/4"	A	WD	SV	-	3/4 HOUR	YES	1	HM	PNT	-	5/A9.6	6/A9.6	20/A9.5	3	PS
136B	4' - 2"	7' - 1"	1 3/4"	D	WD	SV	-	-	NO	-	-	-	-	9/A9.6	10/A9.6	-	-	-
137A	3' - 0"	7' - 0"	1 3/4"	A	WD	SV	-	3/4 HOUR	YES	1	HM	PNT	-	5/A9.6	6/A9.6	20/A9.5	3	PS
137B	4' - 2"	7' - 1"	1 3/4"	D	WD	SV	-	-	NO	-	-	-	-	9/A9.6	10/A9.6	-	-	-
138A	3' - 0"	7' - 0"	1 3/4"	A	WD	SV	-	3/4 HOUR	YES	1	HM	PNT	-	5/A9.6	6/A9.6	20/A9.5	3	PS
138B	4' - 2"	7' - 1"	1 3/4"	D	WD	SV	-	-	NO	-	-	-	-	9/A9.6	10/A9.6	-	-	-
139A	3' - 0"	7' - 0"	1 3/4"	A	WD	SV	-	3/4 HOUR	YES	1	HM	PNT	-	5/A9.6	6/A9.6	20/A9.5	3	PS
139B	4' - 2"	7' - 1"	1 3/4"	D	WD	SV	-	-	NO	-	-	-	-	9/A9.6	10/A9.6	-	-	-
140A	3' - 0"	7' - 0"	1 3/4"	C	WD	SV	(T)		YES	10	HM	PNT	(T)	5/A9.6	6/A9.6	2/A9.6	9, 11	PP
140B	3' - 0"	7' - 0"	1 3/4"	B	SF	FAC	(T/I)	-	YES	S9	SF	FAC	(T/I)	13/A9.8	20/A9.8&11/A9.9	14/A9.5	11	EA
140C	8' - 0"	9' - 0"	2"	E	ALUM	FAC	(T/I)	-		-	-	-	-	9/A9.9	11/A9.9	12/A9.9	1	-
140E																		
140F																		

DOOR SCHEDULE KEY

DOOR & FRAME DESIGNATIONS	
WD	SOLID CORE WOOD
HM	HOLLOW METAL
SF	STOREFRONT
MTL	METAL
STL	STEEL
ALUM	ALUMINUM
SV	SEALED VARNISH
FAC	FACTORY FINISH
PNT	PAINTED

GLAZING DESIGNATIONS	
T	TEMPERED
I	INSULATED
-	-
-	-
-	-
-	-
-	-
-	-

DOOR SCHEDULE GENERAL NOTES:
-FILL FRAME WITH ROCKWOOL
-REFER TO PROJECT MANUAL FOR HARDWARE SPECIFICATIONS AND SCHEDULE
-SEE DOOR TYPES FOR GLASS NOTES

GLAZING GENERAL NOTES:
-FIBERGLASS WINDOWS (FULL UNIT VALUES):
- FIXED: U-0.17
- TILT & TURN: U-0.15

-STOREFRONT FULL UNIT VALUE: U-0.17
-STOREFRONT AT APP. BAY UNIT VALUE: U-0.28

DOOR SCHEDULE REMARKS

1. FIELD VERIFY EXACT SIZE
2. FACTORY FINISH INSIDE, PTD OUTSIDE
3. PROVIDE RUBBER REDUCER STRIP AT THRESHOLD
4. PROVIDE BARRIER FREE, UNISEX RESTROOM SIGNAGE
5. PROVIDE UNISEX RESTROOM SIGNAGE
6. PROVIDE MECHANICAL ROOM SIGNAGE
7. PROVIDE ELECTRICAL ROOM SIGNAGE
8. PROVIDE SERVER ROOM SIGNAGE
9. PROVIDE MAXIMUM OCCUPANCY SIGNAGE
10. NOT USED
11. PROVIDE EXIT SIGNAGE
12. PROVIDE PANIC BAR(S)
13. 1 1/4" UNDERCUT AT DOOR
14. 1" UNDERCUT AT DOOR

DOOR HARDWARE LEGEND

DOOR & FRAME DESIGNATIONS	
PS	PASSAGE SET
PL	PRIVACY LATCH
PB	PANIC BAR
PP	PUSH/ PULL
EO	EXIT ONLY
AR	AS REQ. PER CODE
EA	ELECTRONIC ACCESS
BD	BARN DOOR (CONCEALED PIN AT BASE)

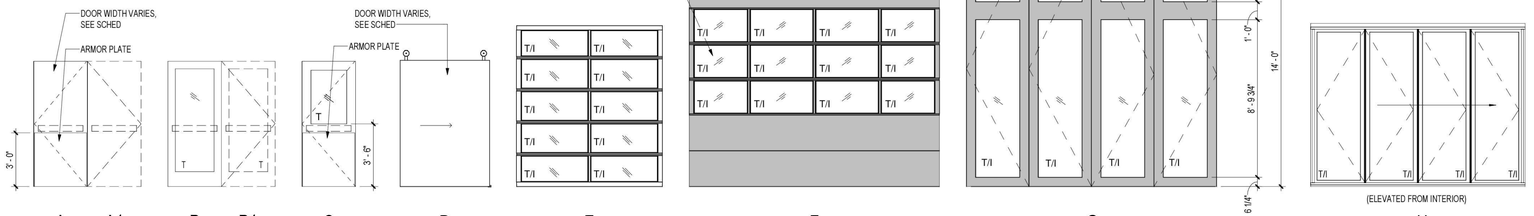

DOOR TYPE LEGEND

Scale: 1/4" = 1'-0"

FINISH SCHEDULE

ROOM		FLOOR		NORTH WALL		EAST WALL		SOUTH WALL		WEST WALL		CEILING		
NUMBER	NAME	TYPE	BASE	MATERIAL	FINISH	MATERIAL	FINISH	MATERIAL	FINISH	MATERIAL	FINISH	MATERIAL	FINISH	REMARKS
100	VESTIBULE	PC-1	RUB4	BRK	FF	-	-	GWB	PT	-	-	WD	FF	1, 10, 12
101	LOBBY	PC-1	RUB4	BRK	FF	GWB	PT	GWB	PT	GWB	PT	WD	FF	1,10, 12
102	PUBLIC RESTROOM	PC-3	CT-01	WRGWB/CT-01	PT/FF	WRGWB/CT-01	PT/FF	WRGWB/CT-01	PT/FF	WRGWB/CT-01	PT/FF	GWB	PT	1, 9
103	FF WORK AREA	PC-1	RUB4	BRK	FF	GWB	PT	GWP	PT	GWB	PT	WD/APC-1	FF/FF	1,10,12
104	OFFICE	PC-1	RUB4	BRK	FF	GWB	PT	GWB	PT	GWB	PT	WD/APC-1	FF/FF	1,10,12
105	HALLWAY	PC-1	RUB4	GWB	PT	GWB	PT	GWB	PT	GWB	PT	APC-1	FF	1
106	DAYROOM	PC-1	RUB4	GWB	PT	GWB	PT	GWB	PT	GWB	PT	EXP/AC-1	PT	1, 7,12
107	KITCHEN/ DINING	PC-3	RUB4	WRGWB	PT	WRGWB	PT	WRGWB	PT	WRGWB	PT	EXP/AC-1	PT	1, 7,12, 15
108	ADA RESTROOM	PC-3	CT-01	WRGWB/CT-01	PT/FF	WRGWB/CT-01	PT/FF	WRGWB/CT-01	PT/FF	WRGWB/CT-01	PT/FF	GWB	PT	2, 9
109	AIRLOCK	PC-1	CB4	FRWC	FF	FRWC	FF	FRWC	FF	FRWC	FF	BB	EP	1, 2, 8, 9
110	EMS STORAGE	PC-1	RUB4	GWB	PT	GWB	PT	GWB	PT	GWB	PT	GWB	PT	1
111	RISER ALCOVE	PC-2	PT-01	PT-01	FF	-	-	PT-01	FF	PT-01	FF	GWB	PT	2, 8
112	GENERAL STORAGE	PC-1	RUB4	GWB	PT	GWB	PT	GWB	PT	GWB	PT	GWB	PT	1
113	ELECTRICAL	PC-1	RUB4	GWB	PT	GWB	PT	GWB	PT	GWB	PT	GWB	PT	5
114	SHOP	PC-2	RUB4	HGWB	PT	HGWB	PT	HGWB	PT	HGWB	PT	GWB	PT	1
115	IT	PC-1	RUB4	PLY/ GWB	PT	PLY/ GWB	PT	PLY/ GWB	PT	PLY/GWB	PT	GWB	PT	4, 5
116	WASH ALCOVE	PC-1	PT-01	PT-01	FF	PT-01	FF	PT-01	FF	PT-01	FF	GWB	PT	1, 2, 8, 9
117	LAUNDRY	PC-1	RUB4	WRGWB	PT	WRGWB	PT	WRGWB	PT	WRGWB	PT	GWB	PT	1, 2
118	BUNKER STORAGE	PC-1	CB4	FRWC	FF	FRWC	FF	FRWC	FF	FRWC	FF	BB	EP	1, 9
119	AIRLOCK	PC-1	CB4	FRWC	FF	FRWC	FF	FRWC	FF	FRWC	FF	BB	EP	1, 2, 8, 9
120	APPARATUS ROOM	PC-2	PT-01	WRGWB/PT-01	PT/FF	WRGWB/PT-01	PT/FF	WRGWB/PT-01	PT/FF	WRGWB/PT-01	PT/FF	EXP	-	1, 2, 3, 9
120A	HALLWAY	PC-2	PT-01	WRGWB/PT-01	PT/FF	WRGWB/PT-01	PT/FF	WRGWB/PT-01	PT/FF	WRGWB/PT-01	PT/FF	GWB	PT	2, 9
121	BAY TOILET	PC-3	CB4	FRWC	PT/FF	FRWC	PT/FF	FRWC	PT/FF	FRWC	PT/FF	BB	EP	2, 9
122	DECON	PC-1	CB4	FRWC	FF	FRWC	FF	FRWC	FF	FRWC	FF	BB	EP	2, 8, 9
123	HALLWAY	PC-1	RUB4	GWB	PT	GWB	PT	-	-	GWB	PT	APC-1	FF	1,11
124A	SLEEPING	PC-1	RUB4	XGWB	PT	XGWB	PT	GWB	PT	XGWB	PT	APC-1	FF	1, 14
124B	ALCOVE	PC-1	RUB4	GWB	PT	GWB	PT	XGWB	PT	GWB	PT	APC-1	FF	1
125A	SLEEPING	PC-1	RUB4	XGWB	PT	XGWB	PT	GWB	PT	XGWB	PT	APC-1	FF	1, 14
125B	ALCOVE	PC-1	RUB4	GWB	PT	GWB	PT	XGWB	PT	GWB	PT	APC-1	FF	1
126A	SLEEPING	PC-1	RUB4	XGWB	PT	XGWB	PT	GWB	PT	XGWB	PT	APC-1	FF	1, 14
126B	ALCOVE	PC-1	RUB4	GWB	PT	GWB	PT	XGWB	PT	GWB	PT	APC-1	FF	1
127A	SLEEPING	PC-1	RUB4	XGWB	PT	XGWB	PT	GWB	PT	XGWB	PT	APC-1	FF	1, 14
127B	ALCOVE	PC-1	RUB4	GWB	PT	GWB	PT	XGWB	PT	GWB	PT	APC-1	FF	1
128	HALLWAY	PC-1	RUB4	GWB	PT	-	-	GWB	PT	GWB	PT	APC-1	FF	
129	HALLWAY	PC-1	RUB4	WRGWB/T-1	PT/FF	WRGWB/CT-01	PT/FF	WRGWB/CT-01	PT/FF	WRGWB/CT-01	PT/FF	GWB	PT	2, 9
130	ACCESSIBLE TOILET/SHOWER	PC-3/ CT-02	CT-01	WRGWB/CT-01	PT/FF	WRGWB/CT-01	PT/FF	WRGWB/CT-01	PT/FF	WRGWB/CT-01	PT/FF	GWB	PT	2, 8, 9, 13
131	ACCESSIBLE TOILET/ SHOWER	PC-3/ CT-02	CT-01	WRGWB/CT-01	PT/FF	WRGWB/CT-01	PT/FF	WRGWB/CT-01	PT/FF	WRGWB/CT-01	PT/FF	GWB	PT	2, 8, 9, 13
132	TOILET AND SHOWER	PC-3/ CT-02	CT-01	WRGWB/CT-01	PT/FF	WRGWB/CT-01	PT/FF	WRGWB/CT-01	PT/FF	WRGWB/CT-01	PT/FF	GWB	PT	2, 8, 9, 13
133	TOILET AND SHOWER	PC-3/ CT-02	CT-01	WRGWB/CT-01	PT/FF	WRGWB/CT-01	PT/FF	WRGWB/CT-01	PT/FF	WRGWB/CT-01	PT/FF	GWB	PT	2, 8, 9, 13
134	MECHANICAL	PC-1	RUB4	GWB	PT	GWB	PT	GWB	PT	GWB	PT	EXP	-	5
135	HALLWAY	PC-1	RUB4	GWB	PT	-	-	GWB	PT	GWB	FF	APC-1	FF	
136A	SLEEPING	PC-1	RUB4	GWB	PT	XGWB	PT	XGWB	PT	XGWB	PT	APC-1	FF	1, 14
136B	ALCOVE	PC-1	RUB4	XGWB	PT	GWB	PT	GWB	PT	GWB	PT	APC-1	FF	1
137A	SLEEPING	PC-1	RUB4	GWB	PT	XGWB	PT	XGWB	PT	XGWB	PT	APC-1	FF	1, 14
137B	ALCOVE	PC-1	RUB4	XGWB	PT	GWB	PT	GWB	PT	GWB	PT	APC-1	FF	1
138A	SLEEPING	PC-1	RUB4	GWB	PT	XGWB	PT	XGWB	PT	XGWB	PT	APC-1	FF	1, 14
138B	ALCOVE	PC-1	RUB4	XGWB	PT	GWB	PT	GWB	PT	GWB	PT	APC-1	FF	1
139A	SLEEPING	PC-1	RUB4	GWB	PT	XGWB	PT	XGWB	PT	XGWB	PT	APC-1	FF	1, 14
139B	ALCOVE	PC-1	RUB4	XGWB	PT	GWB	PT	GWB	PT	GWB	PT	APC-1	FF	1
140	EXERCISE	RAF	RUB4	HGWB	PT	HGWB	PT	HGWB	PT	HGWB	PT	EXP	PT	1

FINISH SCHEDULE KEY

FLOOR		WALL/ WAINSCOT		CEILING	
PC-1	POLISHED CONC.	GWB	GYPSUM WALL BD.	GWB	GYPSUM WALL BD.
PC-2	POLISHED CONC. W/ OIL GUARD SEALER	HGWB	IMPACT RESISTANT GYPSUM WALL BD.	APC-1	SUSPENDED 2x4 ACOUSTIC CEILING PANEL
PC-3	POLISHED CONC. W/ STAIN GUARD SEALER	WRGWB	WATER RESISTANT GYPSUM WALL BD	EXP	EXPOSED TO STRUCTURE
RAF	RESILIENT ATHLETIC FLOORING	XGWB	TYPE X FOR TYPE OF GWB INDICATED (IE WRXGB, HXGWB, HWRXB...)	WD	DROP WOOD CEILING
CT-02	2" CERAMIC FLOOR TILE	FRWC	FABRIC-REINFORCED RESINOUS WALL COATING O/ BACKER BOARD	AC-1	ACOUSTIC CLOUD
BASE					
RUB4	4" RUBBER BASE	BRK	BRICK	**FINISHES**	
CT-01	4" CERAMIC TILE BASE	CT-01	4"X8" CERAMIC TILE	PT	PAINT
PT-01	6" PORCELAIN TILE BASE	PT-01	12"X24" PORCELAIN TILE	FF	FACTORY FINISH
CB4	FABRIC-REINFORCED COVED BASE	BB	BACKER BOARD	EP	EPOXY PAINT

FINISH SCHEDULE REMARKS:
1. PROVIDE BLOCKING FOR WALL MOUNTED ITEMS INCLUDING, BUT LIMITED TO: TACK BOARDS, MARKER BOARDS, METAL SHELVING, METAL CABINETS, MOP HANGERS, COAT/ ROBE HOOKS, CASEWORK.. ETC. REFER TO INTERIOR ELEVATIONS FOR LOCATIONS AND EXTENTS.
2. INCLUDES WRGWB. REFER TO INT. ELEV. & SECTIONS FOR EXTENT.
3. PROVIDE COLOR GRADATION MIX AT WALL TILES PER GRADATION DIAGRAM BELOW.
4. COORDINATE TELEPHONE TERMINATION BOARD (TTB) LOCATION AND QUANTITY WITH ELECTRICAL DRAWINGS AND PAINT WITH FIRE RETARDANT PAINT. FIRE RETARDANT LABEL ON PLYWOOD BACKERBOARDS SHALL BE LEFT EXPOSED.
5. PROVIDE 4" BUILT-UP, SELF LEVELING, CONCRETE CURB AT CONDUIT AND PIPE PENETRATIONS.
6. DROP CLOUD CEILING - BAFFLES
7. DROP CLOUD CEILING
8. PROVIDE FULL HEIGHT TILE W/ BACKER BOARD AT WALLS AND BACKER BOARD AT CEILINGS WHERE SHOWER ENCLOSURES AND MOP SINKS OCCUR.
9. PROVIDE BACKER BOARD BEHIND TILE AND FRWC
10. NO RUBBER BASE AT BRICK.
11. XGWB WHERE OCCURS.
12. PAINT EXPOSED CEILING SPACE ABOVE CLOUDS AND WOOD CEILING- INCLUDING THE UNDERSIDE OF ROOF DECK, DUCT WORK, CONDUIT, STRAPS, AND ALL OTHER PAINTABLE SURFACES (ALLOW FOR 2 COLORS AS SELECTED BY ARCHITECT).
13. PROVIDE CT-02 CERAMIC FLOOR TILE AT SHOWER ENCLOSURE
14. PROVIDE RUB AT SLEEPING ROOMS
15. PROVIDE 6" RUBBER BASE AT KITCHEN CABINET TOE KICKS

FINISH SCHEDULE GENERAL NOTES:
1. SEE REFLECTED CEILING PLANS FOR CEILING HEIGHTS
2. SEE DETAILS FOR BACKER BOARD LOCATIONS

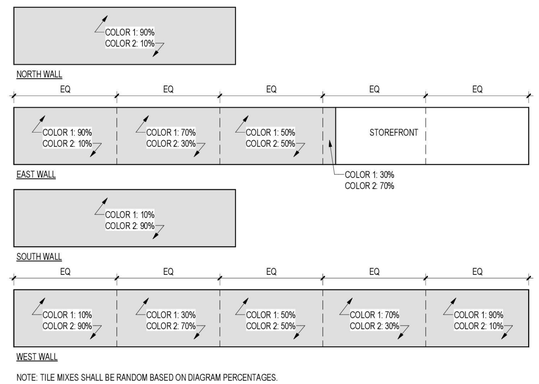

NOTE: TILE MIXES SHALL BE RANDOM BASED ON DIAGRAM PERCENTAGES.

1 TILE MIX GRADIATION DIAGRAM

Scale: 1" = 10'-0"

TCA
ARCHITECTURE + PLANNING + DESIGN
6211 ROOSEVELT WAY
NORTHEAST
SEATTLE, WA 98115
tel: (206) 522-3830
fax: (206) 522-2456

6235 REGISTERED ARCHITECT
BRIAN J. HARRIS
STATE OF WASHINGTON

July 21, 2020

BID SET

No.	Description	Date:

Project Title:

Fire Station 24
City of Kirkland
Kirkland, Washington

Sheet Title:

DOOR SCHEDULE & FINISH SCHEDULE

Scale: As indicated
Project No. : 16-46
Date : July 21, 2020

Sheet Number :

A9.4

C:\Users\michelle\Documents\16-46 Kirkland 24_CENTRAL_R19 0721_michelle@tca-inc.com.rvt

Provided to Builders Exchange of WA, Inc. For usage Conditions Agreement see www.bxwa.com - Always Verify Scal

NOTE:
- REFER TO 8 & 12/A9.5 FOR FLASHING REQUIREMENTS
- REFER TO A2.1 & A5.1 FOR WALL TYPES & A9.1 FOR WALL TYPE CONSTRUCTION NOTES & DIMS.

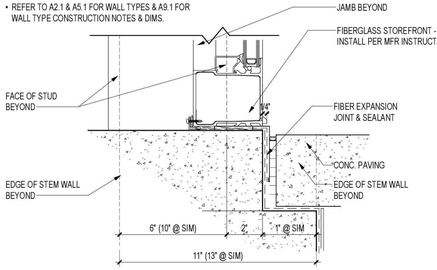

17 EXT. S.F. SILL
Scale: 3" = 1'-0"

NOTE:
- REFER TO 8/A9.5 FOR PREP & FLASHING @ ROUGH OPENING
- REFER TO 12/A9.5 FOR THRESHOLD FLASHING REQUIREMENTS
- REFER TO A2.1 & A5.1 FOR WALL TYPES & A9.1 FOR WALL TYPE CONSTRUCTION NOTES & DIMS.
- ALL THRESHOLDS TO COMPLY WITH IBC SEC 1008.1.6.

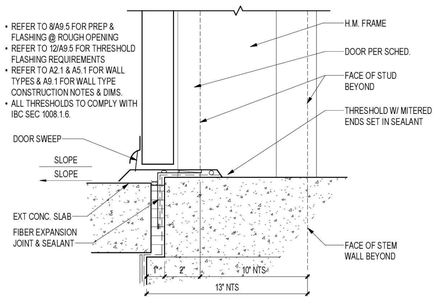

18 EXT. H.M. THRESHOLD
Scale: 3" = 1'-0"

NOTE:
- REFER TO 8/A9.5 FOR PREP & FLASHING @ ROUGH OPENING
- REFER TO 12/A9.5 FOR THRESHOLD FLASHING REQUIREMENTS
- REFER TO A2.1 & A5.1 FOR WALL TYPES & A9.1 FOR WALL TYPE CONSTRUCTION NOTES & DIMS.
- ALL THRESHOLDS TO COMPLY WITH IBC SEC 1008.1.6.

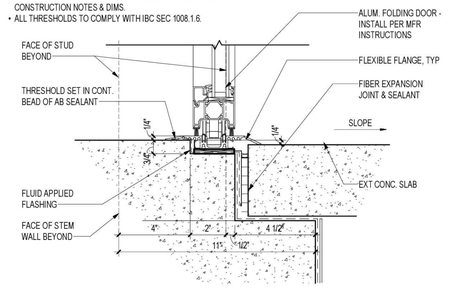

19 FOLDING DOOR THRESHOLD
Scale: 3" = 1'-0"

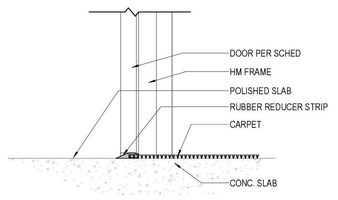

20 INT. H.M. DOOR THRESH - CARPET TO POLISHED CONC.
Scale: 1 1/2" = 1'-0"

NOTE:
- REFER TO 8/A9.5 FOR PREP & FLASHING @ ROUGH OPENING
- REFER TO 12/A9.5 FOR THRESHOLD FLASHING REQUIREMENTS
- REFER TO A2.1 & A5.1 FOR WALL TYPES & A9.1 FOR WALL TYPE CONSTRUCTION NOTES & DIMS.
- ALL THRESHOLDS TO COMPLY WITH IBC SEC 1008.1.6.

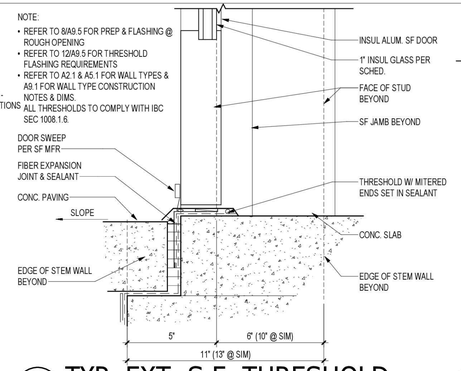

13 TYP. EXT. S.F. THRESHOLD
Scale: 3" = 1'-0"

NOTE:
- REFER TO 8/A9.5 FOR PREP & FLASHING @ ROUGH OPENING
- REFER TO 12/A9.5 FOR THRESHOLD FLASHING REQUIREMENTS
- REFER TO A2.1 & A5.1 FOR WALL TYPES & A9.1 FOR WALL TYPE CONSTRUCTION NOTES & DIMS.
- ALL THRESHOLDS TO COMPLY WITH IBC SEC 1008.1.6.

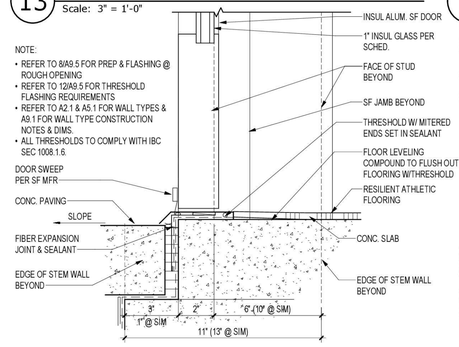

14 EXT. S.F. THRESHOLD @ RAF
Scale: 3" = 1'-0"

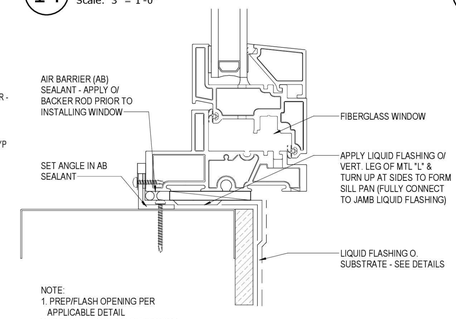

NOTE:
1. PREP/FLASH OPENING PER APPLICABLE DETAIL
2. DO NOT APPLY LIQUID FLASHING TO EXPOSED MASONRY

15 AB SEALANT @ SILL
Scale: 6" = 1'-0"

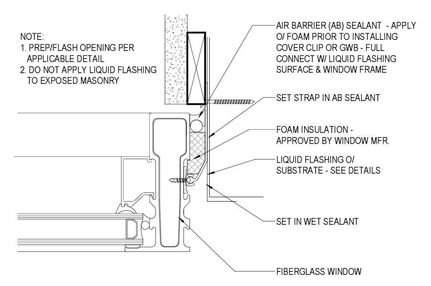

NOTE:
1. PREP/FLASH OPENING PER APPLICABLE DETAIL
2. DO NOT APPLY LIQUID FLASHING TO EXPOSED MASONRY

16 AB SEALANT @ JAMB
Scale: 6" = 1'-0"

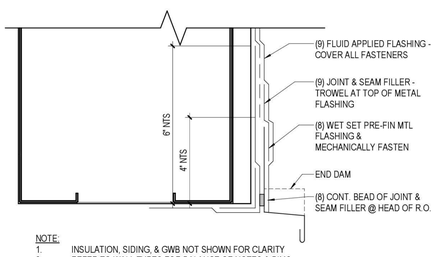

NOTE:
1. INSULATION, SIDING, & GWB NOT SHOWN FOR CLARITY
2. REFER TO WALL TYPES FOR BALANCE OF NOTES & DIMS
3. (#) DENOTES SEQUENCE OF APPLICATION

9 HEAD FLASHING DIAGRAM
Scale: 6" = 1'-0"

NOTE:
1. INSULATION, SIDING, & GWB NOT SHOWN FOR CLARITY
2. REFER TO WALL TYPES FOR BALANCE OF NOTES & DIMS
3. (#) DENOTES SEQUENCE OF APPLICATION

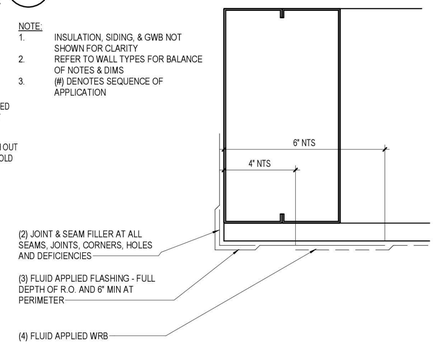

10 JAMB FLASHING DIAGRAM
Scale: 6" = 1'-0"

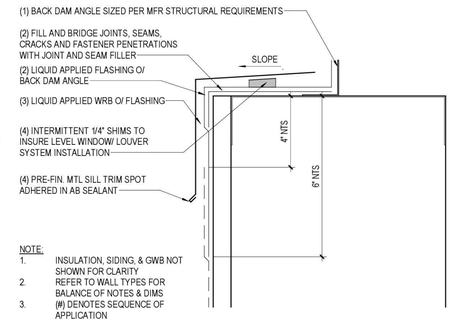

NOTE:
1. INSULATION, SIDING, & GWB NOT SHOWN FOR CLARITY
2. REFER TO WALL TYPES FOR BALANCE OF NOTES & DIMS
3. (#) DENOTES SEQUENCE OF APPLICATION

11 SILL FLASHING DIAGRAM
Scale: 6" = 1'-0"

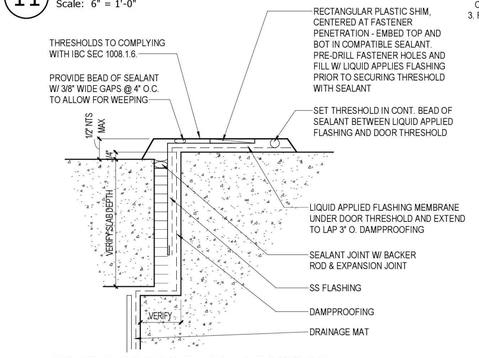

12 THRESHOLD FLASHING DIAGRAM
Scale: 6" = 1'-0"

STEP 1: CONSOLIDATE AND SEAL RAW, CUT GWB EDGES AT ROUGH OPENING. INSTALL GALV. MTL BACK DAM ANGLE SIZED PER WINDOW/ LOUVER MFR REQUIREMENTS.
STEP 2: APPLY JOINT & SEAM FILLER TO ALL INSIDE CORNERS, CRACKS, JOINTS AND SEAMS OF ROUGH OPENING - EXTEND 1" MIN. BEYOND ALL SEAMS. - APPLY JOINT & SEAM FILLER TO OPENINGS IN FRAMING MEMBERS AND FASTENER HEADS.
STEP 3: APPLY LIQUID FLASHING FULL DEPTH OF WINDOW/ LOUVER FRAME AND ONTO FACE OF SHEATHING 4-6" BEYOND EDGE OF R.O.
STEP 4: APPLY WRB PER MANUF. RECOMMENDATIONS.
STEP 5: APPLY PRE-FIN MTL SILL TRIM. O/ INTERMITTENT SHIMS AND SPOT ADHERE W/ AB SEALANT. MTL SILL TRIM TO BE HELD OFF BACK ANGLE 1" MIN. PROVIDE INTERMITTENT SHIMS O/ SILL FLASHING TO PROVIDE LEVEL WINDOW/ LOUVER. PROVIDE 50% SUPPORT AT SILL. SPACE SHIMS @ 2' MAX. CONFIRM SUPPORT W/ MFR REQUIREMENTS
STEP 6: INSTALL WINDOW/ LOUVER PER MFR RECOMMENDATIONS. SET IN CONT. BEAD OF AB SEALANT AT BACK DAM.
STEP 7: INSTALL PRE-FIN MTL HEAD TRIM AND SET IN MFR JOINT FILLER. FASTEN THRU VERT. LEG OF MTL. COUNTER FLASH WITH JOINT AND SEAM FILLER
STEP 8: INSTALL CONT. AB SEALANT AND BACKER ROD BETWEEN WINDOW FRAME AND FLASHING

NOTE:
1. DRAWINGS SHOWN ARE DIAGRAMMATIC
2. REFER TO DETAILS 9-11 ON A9.5 FOR HEAD, JAMB AND SILL DETAILING AT ROUGH OPENING

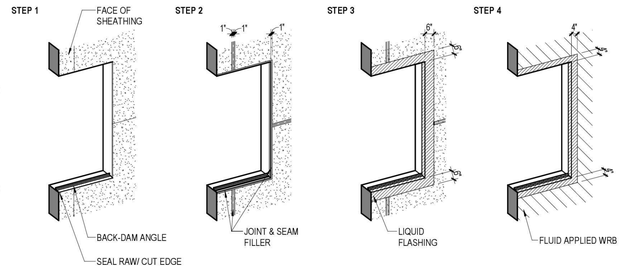

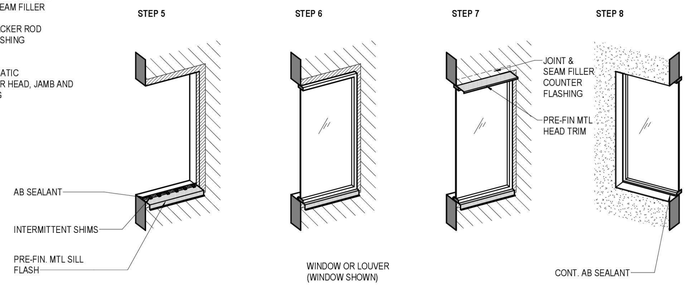

6 FLASHING DIAGRAM @ WINDOW/ LOUVER
Scale: 1/4" = 1'-0"

STEP 1: CONSOLIDATE AND SEAL RAW, CUT GWB EDGES OF ROUGH OPENING. INSTALL MTL BACK DAM ANGLE SIZED PER WINDOW/ LOUVER MFR REQUIREMENTS.
STEP 2: APPLY JOINT & SEAM FILLER TO ALL INSIDE CORNERS, CRACKS, JOINTS AND SEAMS OF ROUGH OPENING - EXTEND 1" MIN. BEYOND ALL SEAMS. - APPLY JOINT & SEAM FILLER TO OPENINGS IN FRAMING MEMBERS
STEP 3: APPLY LIQUID FLASHING FULL DEPTH OF WINDOW/ LOUVER FRAME AND ONTO FACE OF SHEATHING 4-6" BEYOND EDGE OF R.O.
STEP 4: APPLY WRB PER MANUF. RECOMMENDATIONS. PROVIDE INTERMITTENT SHIMS O/ SILL FLASHING TO PROVIDE LEVEL STOREFRONT/ DOOR SYSTEM. PROVIDE 50% SUPPORT AT SILL. SPACE SHIMS @ 2' MAX. CONFIRM SUPPORT W/ MFR REQUIREMENTS
STEP 5: **(REFER ALSO TO 4/10.1)** APPLY PRE-FINISHED MTL FLASHING. - PROVIDE 4" STRIP OF FLUID APPLIED LAPPING 2" ONTO LIQUID APPLIED WRB AND 2" ON ONTO PRE-FIN. MTL FLASHING
STEP 6: INSTALL DOOR/ STOREFRONT SYSTEM PER MFR RECOMMENDATIONS. SET IN CONT. BEAD OF AB SEALANT AT BACK DAM.
STEP 7: INSTALL PRE-FIN MTL HEAD TRIM AND SET IN MFR JOINT FILLER. FASTEN THRU VERT. LEG OF MTL. COUNTER FLASH WITH JOINT AND SEAM FILLER
STEP 8: INSTALL CONT. AB SEALANT AND BACKER ROD BETWEEN WINDOW FRAME AND FLASHING

NOTE:
1. DRAWINGS SHOWN ARE DIAGRAMMATIC
2. REFER TO DETAILS 9-11 ON A9.5 FOR HEAD, JAMB AND SILL DETAILING AT ROUGH OPENING
3. REFER TO DETAIL 4 AND 8/A10.1 FOR FLASHING AT BASE OF WALL

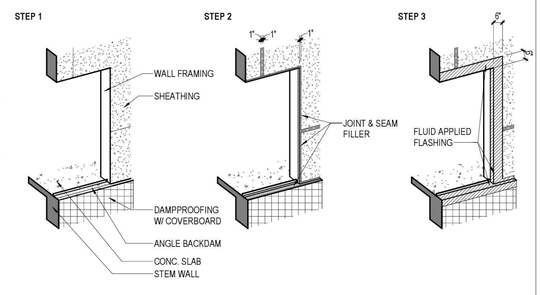

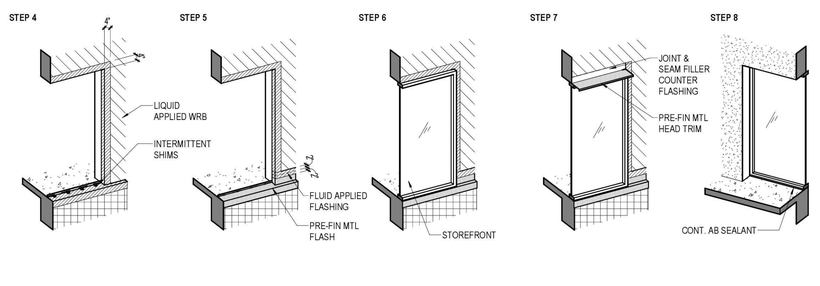

8 FLASHING DIAGRAM @ STOREFRONT & DOOR FRAMES
Scale: 1/4" = 1'-0"

TCA
ARCHITECTURE + PLANNING + DESIGN
6211 ROOSEVELT WAY NORTHEAST
SEATTLE, WA 98115
tel: (206) 522-3830
fax: (206) 522-2456

6235 REGISTERED ARCHITECT
BRIAN J. HARRIS
STATE OF WASHINGTON

July 21, 2020

BID SET

No.	Description	Date:

Project Title:

Fire Station 24
City of Kirkland
Kirkland, Washington

Sheet Title:

ENLARGED FLASHING AND THRESHOLD DETAILS

Scale: As indicated
Project No. : 16-46
Date : July 21, 2020

Sheet Number :

A9.5

C:\Users\michelle\Documents\16-46 Kirkland 24_CENTRALx_michelle@tca-inc.com.rvt

Provided to Builders Exchange of WA, Inc. For usage Conditions Agreement see www.bxwa.com - Always Verify Scal

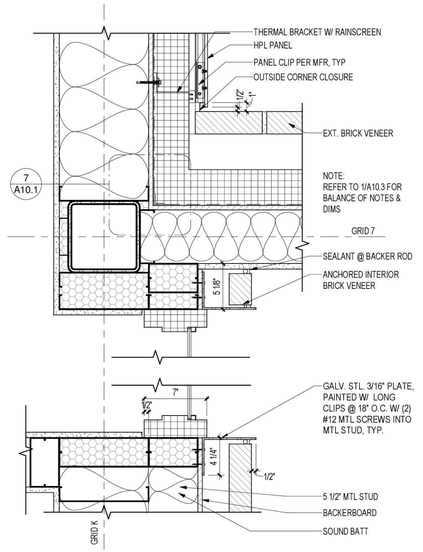

INT. JAMB @ HM FRAME TYPE 9

18 Scale: 1 1/2" = 1'-0"

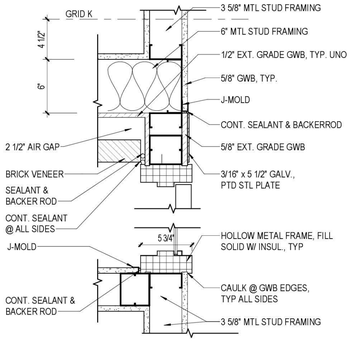

INT. H.M. JAMB @ DR. 101A

13 Scale: 1 1/2" = 1'-0"

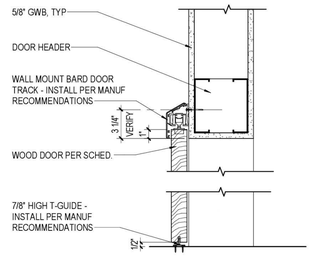

SLIDING DOOR HEAD/ THRESH

9 Scale: 1 1/2" = 1'-0"

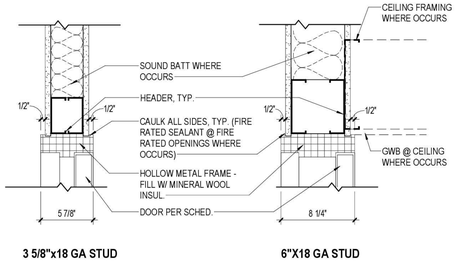

3 5/8"x18 GA STUD 6"X18 GA STUD

TYP. INT. HM HEAD

5 Scale: 1 1/2" = 1'-0"

DOOR/ WINDOW/ STOREFRONT GENERAL NOTES

1. REFER TO SHEETS A2.1, A5.1AND A9.1 FOR EXTERIOR ENVELOPE TYPES, CONSTRUCTION NOTES AND DIMENSIONS
2. REFER TO SHEET A9.3 FOR WINDOW/ DOOR AND STOREFRONT TYPES AND FRAME DIMENSIONS
3. REFER TO SHEET A9.5 FOR ENLARGED FLASHING DETAILS AS FOLLOWS:
   - A. WINDOW/ LOUVER HEAD: DETAILS 6 AND 9
   - B. WINDOW/ LOUVER JAMB: DETAILS 6 AND 10
   - C. WINDOW/ LOUVER SILL: DETAILS 6, 11 AND 12
   - D. DOOR/ STOREFRONT HEAD: DETAILS 8 AND 9
   - E. DOOR/ STOREFRONT JAMB: DETAILS 8 AND 10
   - F. DOOR/ STOREFRONT SILL: DETAILS 8 AND 12
4. REFER TO DETAIL 15 & 16/A9.5 FOR AB SEALANT AT FIBERGLASS WINDOWS AND STOREFRONT
5. REFER TO SHEET A5.3 FOR BALANCE OF NOTES AT AWNINGS.
6. THERMAL BRACKETS SHALL BE SET IN LIQUID APPLIED FLASHING O/ WRB.
7. WHERE J-TRIM IS NOT SHOWN, EXPOSED METAL PANEL EDGES SHALL BE FACTORY FINISHED W/ NO EXPOSED FIELD CUT PANEL EDGES TO MINIMIZE PRE-MATURE CORROSION.

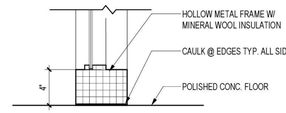

TYP. INT. HM. SILL

1 Scale: 1 1/2" = 1'-0"

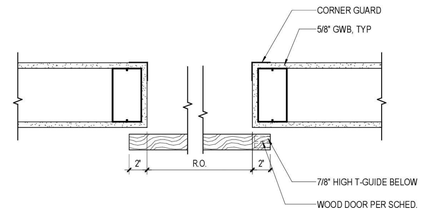

SLIDING DOOR JAMB

10 Scale: 1 1/2" = 1'-0"

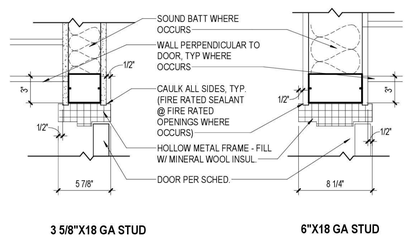

3 5/8"X18 GA STUD 6"X18 GA STUD

TYP. INT. HM JAMB

6 Scale: 1 1/2" = 1'-0"

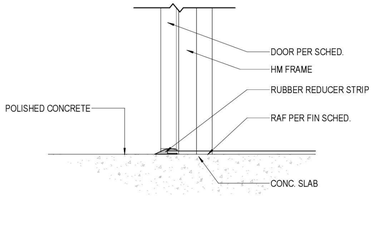

INT. H.M. DOOR THRESH - RAF TO CONC. SLAB

2 Scale: 1 1/2" = 1'-0"

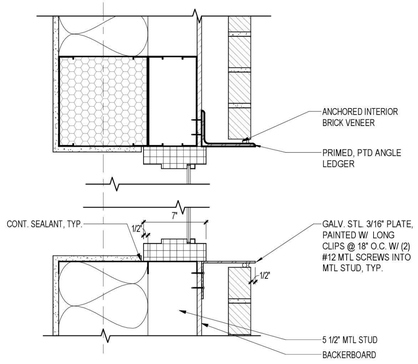

INT. HEAD/ SILL @ HM FRAME TYPE 9

19 Scale: 1 1/2" = 1'-0"

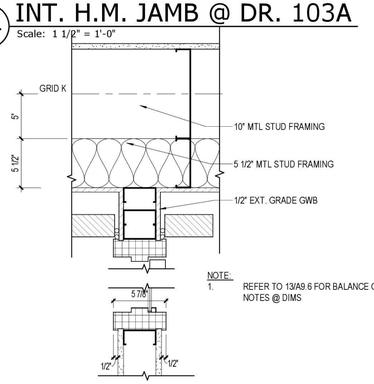

INT. H.M. JAMB @ DR. 104A

15 Scale: 1 1/2" = 1'-0"

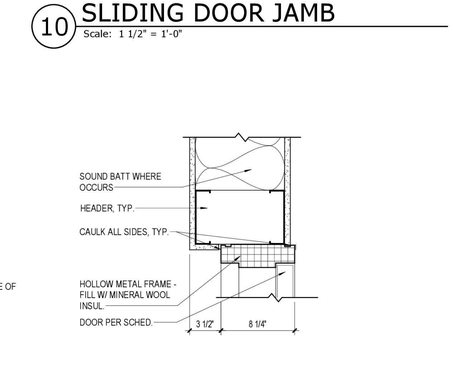

INT. HM HEAD

11 Scale: 1 1/2" = 1'-0"

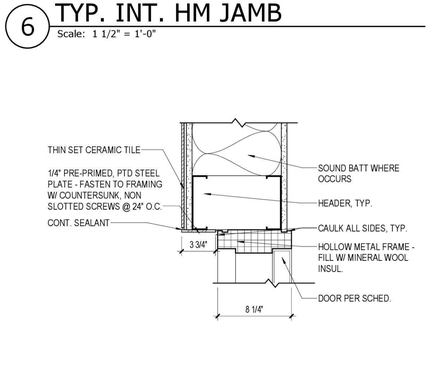

INT. HM HEAD @ TILE

7 Scale: 1 1/2" = 1'-0"

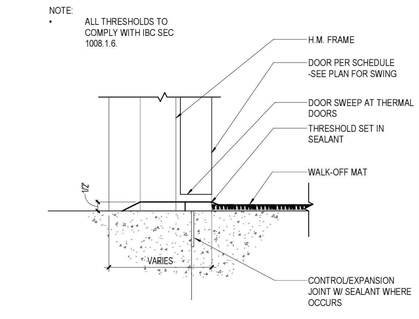

INT. H.M. THRESHOLD @ WALK-OFF MAT

3 Scale: 3" = 1'-0"

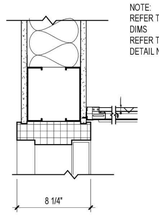

INT. HM HEAD @ ACP CEIILING

20 Scale: 1 1/2" = 1'-0"

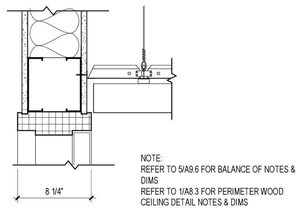

INT. HM HEAD @ ACOUSTIC WOOD CEILING

16 Scale: 1 1/2" = 1'-0"

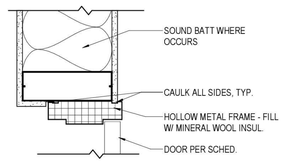

INT. HM JAMB

12 Scale: 1 1/2" = 1'-0"

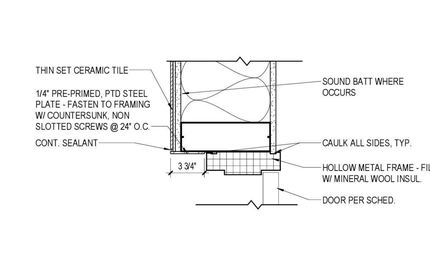

INT. HM JAMB @ TILE

8 Scale: 1 1/2" = 1'-0"

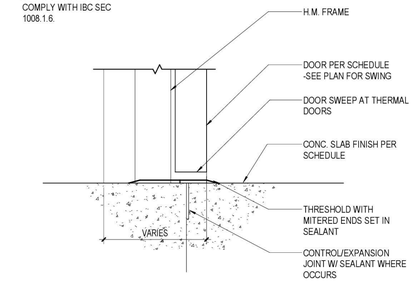

TYP. INT. H.M. THRESHOLD

4 Scale: 3" = 1'-0"

TCA
ARCHITECTURE + PLANNING + DESIGN
6211 ROOSEVELT WAY NORTHEAST
SEATTLE, WA 98115
tel: (206) 522-3830
fax: (206) 522-2456
6235 REGISTERED ARCHITECT
BRIAN J. HARRIS STATE OF WASHINGTON
July 21, 2020

BID SET

No.	Description	Date:

Project Title:

Fire Station 24

City of Kirkland
Kirkland, Washington

Sheet Title:

INTERIOR DOOR/ WINDOW DETAILS

Scale: As indicated
Project No. : 16-46
Date : July 21, 2020

Sheet Number :

A9.6

C:\Users\michelle\Documents\16-46 Kirkland 24_CENTRAL+_michelle@tca-inc.com.rvt

Provided to Builders Exchange of WA, Inc. For usage Conditions Agreement see www.bxwa.com - Always Verify Scal

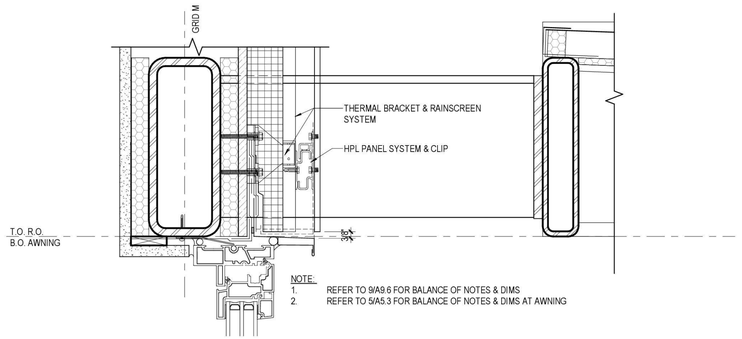

13 WINDOW HEAD @ HPL SIDING W/AWNING

Scale: 3" = 1'-0"

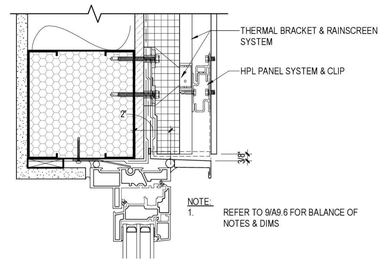

5 WINDOW HEAD @ HPL SIDING

Scale: 3" = 1'-0"

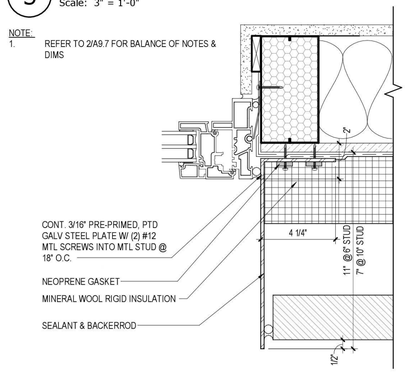

6 WINDOW JAMB @ BRICK

Scale: 3" = 1'-0"

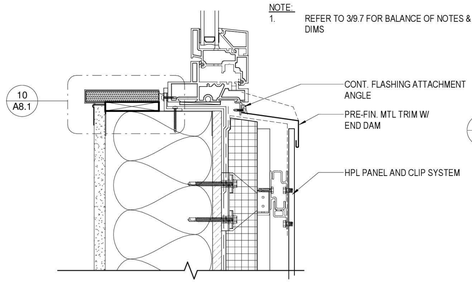

7 WINDOW SILL @ HPL SIDING

Scale: 3" = 1'-0"

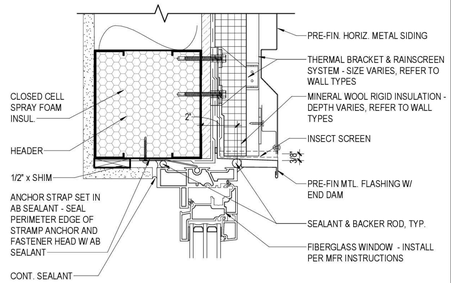

1 WINDOW HEAD @ MTL SIDING

Scale: 3" = 1'-0"

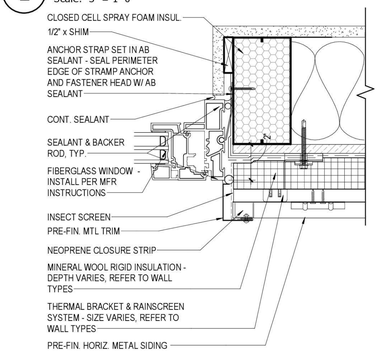

2 WINDOW JAMB @ MTL SIDING

Scale: 3" = 1'-0"

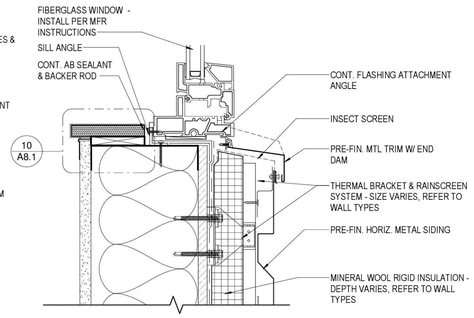

3 WINDOW SILL @ MTL SIDING

Scale: 3" = 1'-0"

TCA
ARCHITECTURE + PLANNING + DESIGN
6211 ROOSEVELT WAY NORTHEAST
SEATTLE, WA 98115
tel: (206) 522-3830
fax: (206) 522-2456

6235 REGISTERED ARCHITECT
BRIAN J. HARRIS
STATE OF WASHINGTON

July 21, 2020

BID SET

No.	Description	Date:

Project Title:

Fire Station 24

City of Kirkland
Kirkland, Washington

Sheet Title:

EXTERIOR WINDOW DETAILS

Scale: 3" = 1'-0"
Project No. : 16-46
Date : July 21, 2020

Sheet Number :

A9.7

C:\Users\michelle\Documents\16-46 Kirkland 24_CENTRAL\x_michelle@tca-inc.com.rvt

Provided to Builders Exchange of WA, Inc. For usage Conditions Agreement see www.bxwa.com - Always Verify Scal

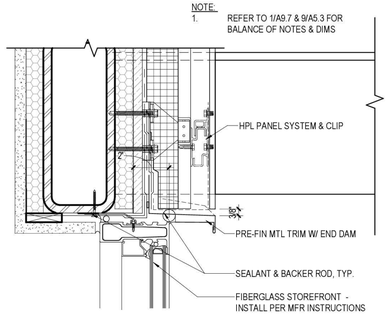

17 S.F. HEAD @ HPL PANEL W/ AWNING

Scale: 3" = 1'-0"

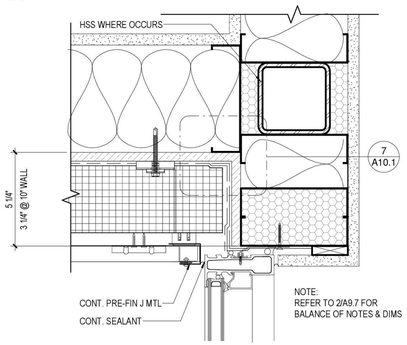

18 S.F. JAMB @ INSIDE CORNER

Scale: 3" = 1'-0"

19 S.F. OUTSIDE CORNER @ POST

Scale: 1 1/2" = 1'-0"

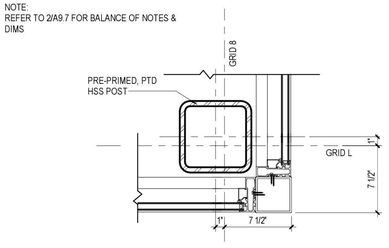

20 S.F. OUTSIDE CRNR @ GRID L/8

Scale: 1 1/2" = 1'-0"

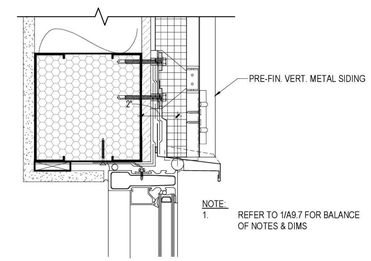

13 S.F. HEAD @ VERT. MTL. SIDING

Scale: 3" = 1'-0"

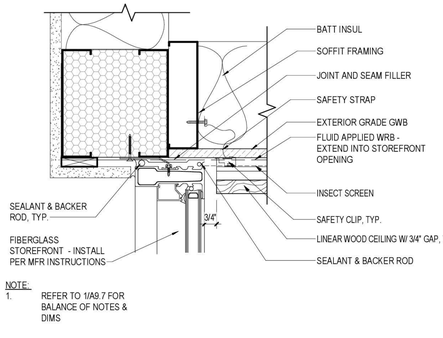

14 S.F. HEAD @ SOFFIT

Scale: 3" = 1'-0"

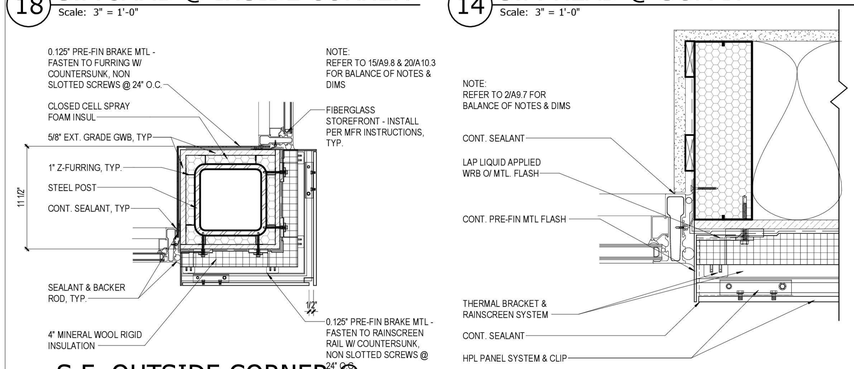

15 S.F. JAMB @ HPL PANEL

Scale: 3" = 1'-0"

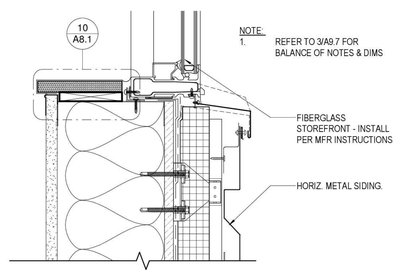

16 S.F. SILL @ HORIZ. SIDING

Scale: 3" = 1'-0"

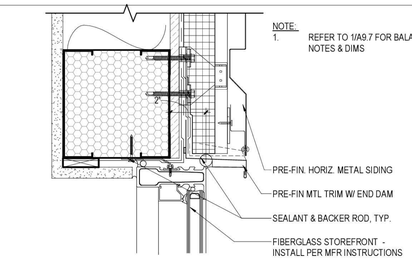

9 S.F. HEAD @ HORIZ. MTL SIDING

Scale: 3" = 1'-0"

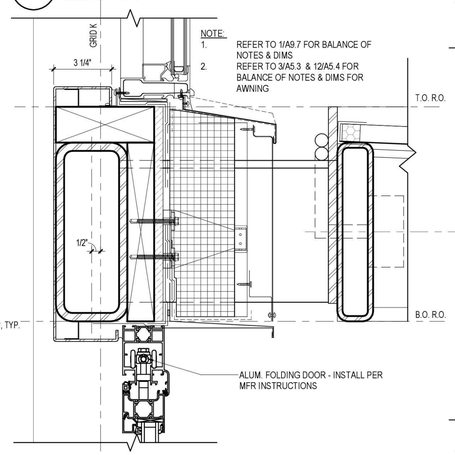

FOLDING DOOR HEAD W/ AWNING

10

Scale: 3" = 1'-0"

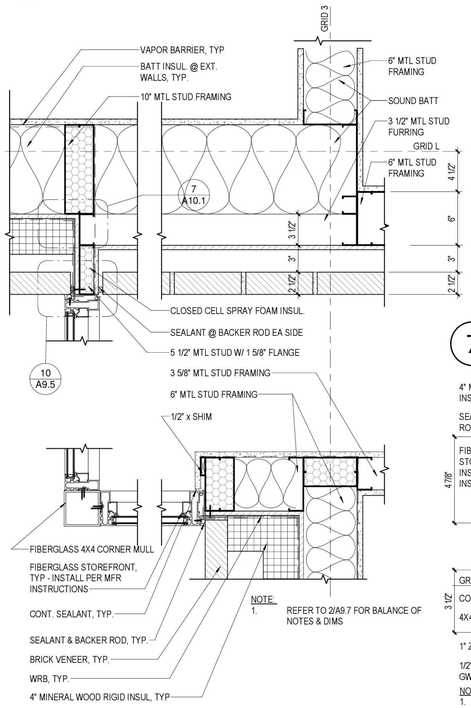

12 S.F. JAMB @ S1 & S2

Scale: 1 1/2" = 1'-0"

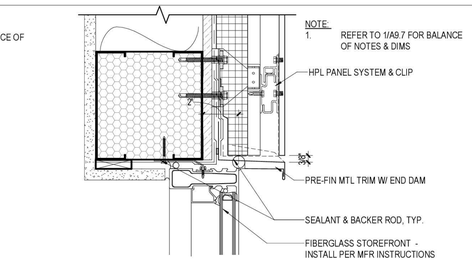

5 S.F. HEAD @ HPL PANEL

Scale: 3" = 1'-0"

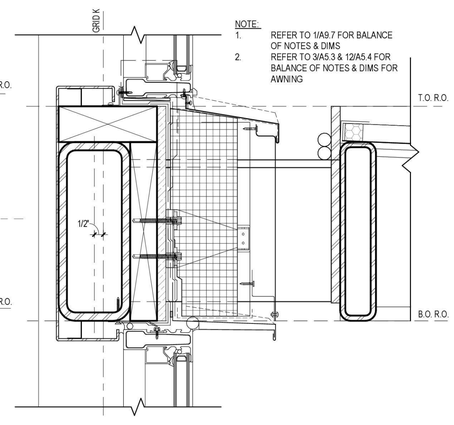

6 S.F. HEAD @ S5 W/ AWNING

Scale: 3" = 1'-0"

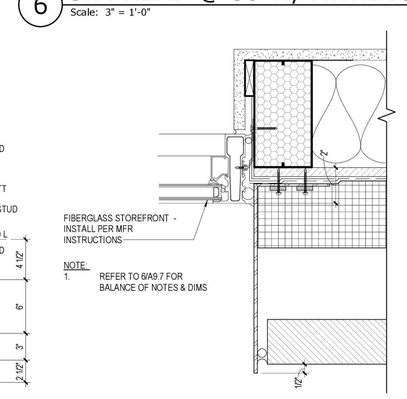

7 S.F. JAMB @ BRICK

Scale: 3" = 1'-0"

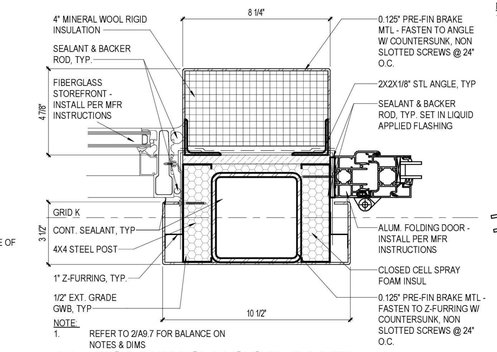

8 FOLDING DOOR JAMB

Scale: 3" = 1'-0"

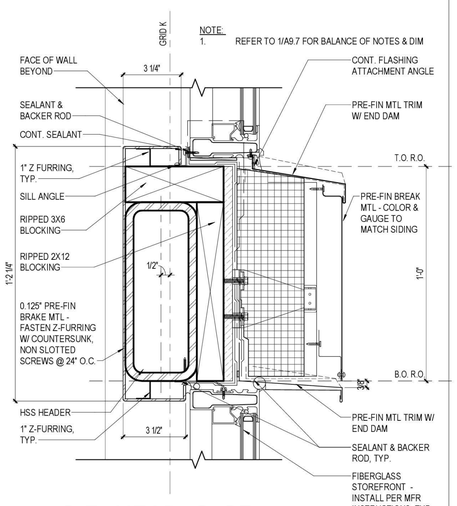

2 S.F. HEAD @ S5

Scale: 3" = 1'-0"

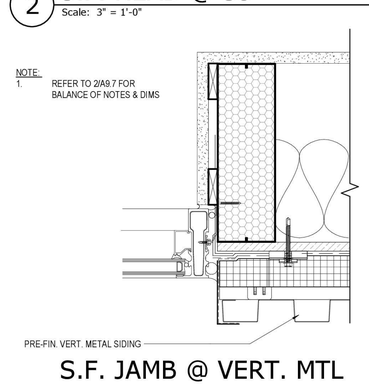

3 S.F. JAMB @ VERT. MTL SIDING

Scale: 3" = 1'-0"

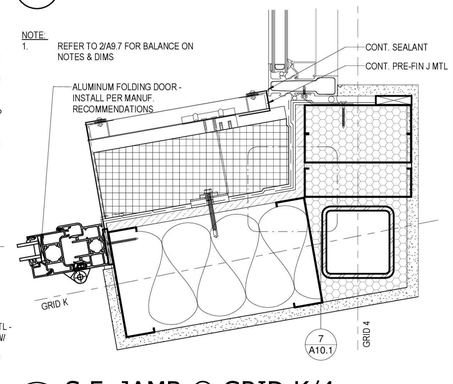

4 S.F. JAMB @ GRID K/4

Scale: 3" = 1'-0"

TCA
ARCHITECTURE + PLANNING + DESIGN
6211 ROOSEVELT WAY NORTHEAST
SEATTLE, WA 98115
tel: (206) 522-3830
fax: (206) 522-2456

6235 REGISTERED ARCHITECT
BRIAN J. HARRIS
STATE OF WASHINGTON

July 21, 2020

DOOR/ WINDOW/ STOREFRONT GENERAL NOTES

1. REFER TO SHEETS A2.1, A5.1AND A9.1 FOR EXTERIOR ENVELOPE TYPES, CONSTRUCTION NOTES AND DIMENSIONS
2. REFER TO SHEET A9.3 FOR WINDOW/ DOOR AND STOREFRONT TYPES AND FRAME DIMENSIONS
3. REFER TO SHEET A9.5 FOR ENLARGED FLASHING DETAILS AS FOLLOWS:
   - A. WINDOW/ LOUVER HEAD: DETAILS 6 AND 9
   - B. WINDOW/ LOUVER JAMB: DETAILS 6 AND 10
   - C. WINDOW/ LOUVER SILL: DETAILS 6, 11 AND 12
   - D. DOOR/ STOREFRONT HEAD: DETAILS 8 AND 9
   - E. DOOR/ STOREFRONT JAMB: DETAILS 8 AND 10
   - F. DOOR/ STOREFRONT SILL: DETAILS 8 AND 12
4. REFER TO DETAIL 15 & 16/A9.5 FOR AB SEALANT AT FIBERGLASS WINDOWS AND STOREFRONT
5. REFER TO SHEET A5.3 FOR BALANCE OF NOTES AT AWNINGS.
6. THERMAL BRACKETS SHALL BE SET IN LIQUID APPLIED FLASHING O/ WRB
7. WHERE J-TRIM IS NOT SHOWN, EXPOSED METAL PANEL EDGES SHALL BE FACTORY FINISHED W/ NO EXPOSED FIELD CUT PANEL EDGES TO MINIMIZE PRE-MATURE CORROSION.

BID SET

No.	Description	Date:

Project Title:

Fire Station 24
City of Kirkland
Kirkland, Washington

Sheet Title:

EXTERIOR STOREFRONT DETAILS

Scale: As indicated
Project No. : 16-46
Date : July 21, 2020

Sheet Number :

A9.8

C:\Users\michelle\Documents\16-46 Kirkland 24_CENTRAL\x_michelle@tca-inc.com.rvt

Provided to Builders Exchange of WA, Inc. For usage Conditions Agreement see www.bxwa.com - Always Verify Scal

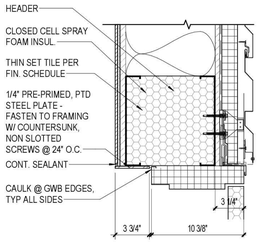

NOTE:
REFER TO 2/A9.9 FOR BALANCE OF NOTES & DIMS

17 EXT. HM HEAD @ HORIZ. SIDING W/ TILE
Scale: 1 1/2" = 1'-0"

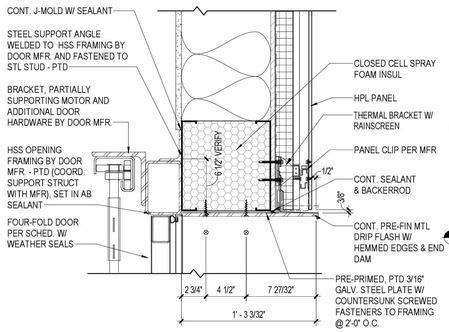

13 FOURFOLD DOOR HEADER
Scale: 1 1/2" = 1'-0"

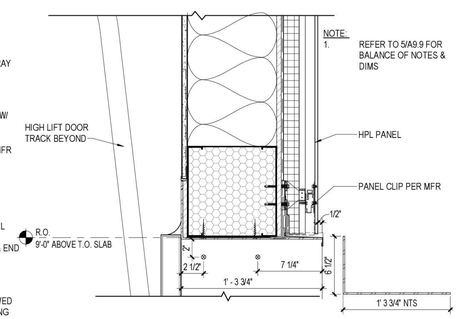

9 O.H. DOOR HEAD @ HPL PANEL
Scale: 1 1/2" = 1'-0"

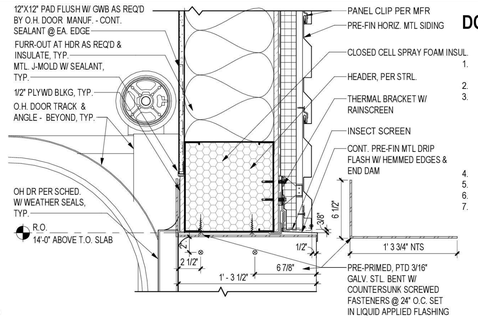

5 O.H. DOOR HEAD @ HORIZ. MTL SIDING
Scale: 1 1/2" = 1'-0"

DOOR/ WINDOW/ STOREFRONT GENERAL NOTES

1. REFER TO SHEETS A2.1, A5.1AND A9.1 FOR EXTERIOR ENVELOPE TYPES, CONSTRUCTION NOTES AND DIMENSIONS
2. REFER TO SHEET A9.3 FOR WINDOW/ DOOR AND STOREFRONT TYPES AND FRAME DIMENSIONS
3. REFER TO SHEET A9.5 FOR ENLARGED FLASHING DETAILS AS FOLLOWS:
   - A. WINDOW/ LOUVER HEAD: DETAILS 6 AND 9
   - B. WINDOW/ LOUVER JAMB: DETAILS 6 AND 10
   - C. WINDOW/ LOUVER SILL: DETAILS 6, 11 AND 12
   - D. DOOR/ STOREFRONT HEAD: DETAILS 8 AND 9
   - E. DOOR/ STOREFRONT JAMB: DETAILS 8 AND 10
   - F. DOOR/ STOREFRONT SILL: DETAILS 8 AND 12
4. REFER TO DETAIL 15 & 16/A9.5 FOR AB SEALANT AT FIBERGLASS WINDOWS AND STOREFRONT
5. REFER TO SHEET A5.3 FOR BALANCE OF NOTES AT AWNINGS.
6. THERMAL BRACKETS SHALL BE SET IN LIQUID APPLIED FLASHING O/ WRB
7. WHERE J-TRIM IS NOT SHOWN, EXPOSED METAL PANEL EDGES SHALL BE FACTORY FINISHED W/ NO EXPOSED FIELD CUT PANEL EDGES TO MINIMIZE PRE-MATURE CORROSION.

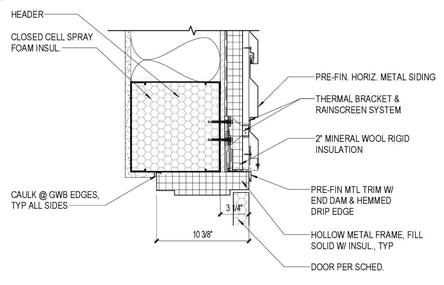

2 EXT. HM HEAD @ HORIZ. SIDING
Scale: 1 1/2" = 1'-0"

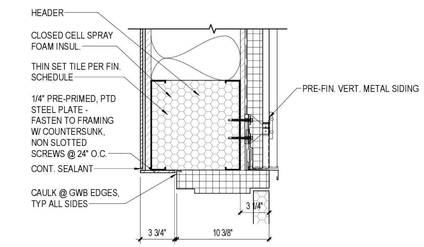

NOTE:
REFER TO 2/A9.9 FOR BALANCE OF NOTES & DIMS

19 EXT. HM HEAD @ VERT. SIDING W/ TILE
Scale: 1 1/2" = 1'-0"

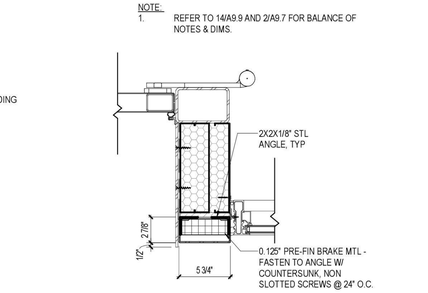

15 FOURFOLD DOOR JAMB W/ STOREFRONT
Scale: 1 1/2" = 1'-0"

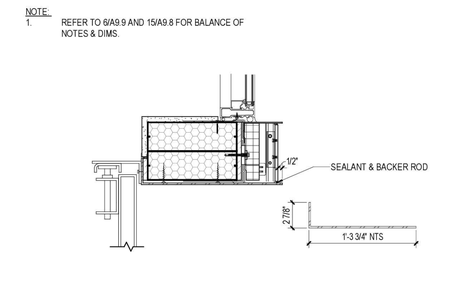

11 O.H. DOOR JAMB W/ STOREFRONT
Scale: 1 1/2" = 1'-0"

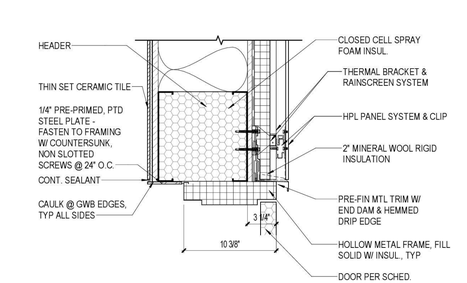

7 EXT. HM HEAD @ HPL PANEL
Scale: 1 1/2" = 1'-0"

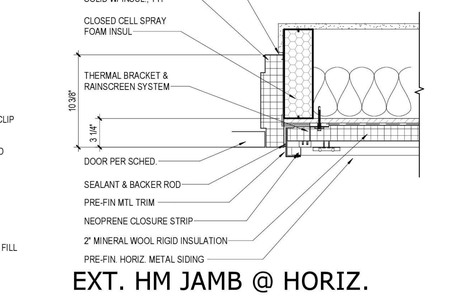

3 EXT. HM JAMB @ HORIZ. SIDING
Scale: 1 1/2" = 1'-0"

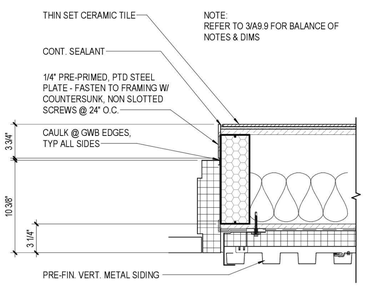

NOTE:
REFER TO 2/A9.9 FOR BALANCE OF NOTES & DIMS

20 EXT. HM JAMB @ VERT. SIDING W/ TILE
Scale: 1 1/2" = 1'-0"

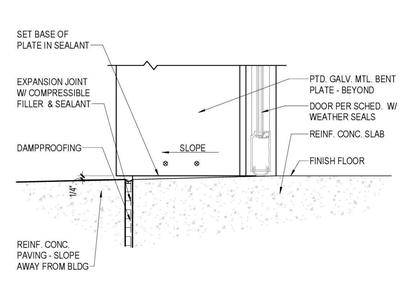

16 APP. BAY DOOR THRESHOLD
Scale: 1 1/2" = 1'-0"

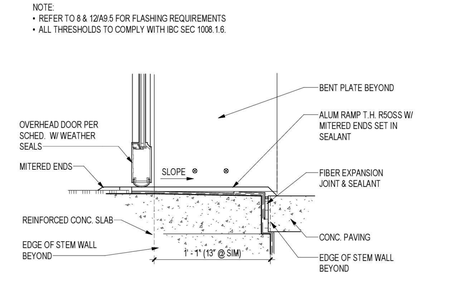

12 O.H. DOOR THRESH @ EXERCISE ROOM
Scale: 1 1/2" = 1'-0"

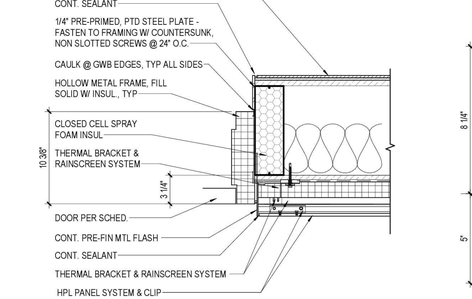

8 EXT. HM JAMB @ HPL PANEL
Scale: 1 1/2" = 1'-0"

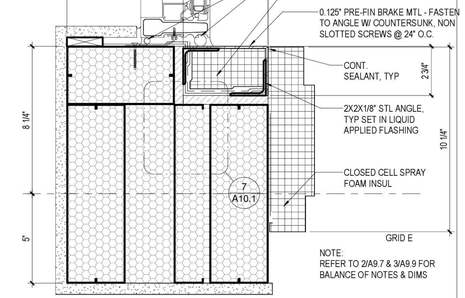

4 EXT. H.M. JAMB @ DR 120H
Scale: 3" = 1'-0"

TCA
ARCHITECTURE + PLANNING + DESIGN
6211 ROOSEVELT WAY NORTHEAST
SEATTLE, WA 98115
tel: (206) 522-3830
fax: (206) 522-2456

6235 REGISTERED ARCHITECT
BRIAN J. HARRIS
STATE OF WASHINGTON

July 21, 2020

BID SET

No.	Description	Date:

Project Title:

Fire Station 24
City of Kirkland
Kirkland, Washington

Sheet Title:

EXTERIOR DOOR DETAILS

Scale: As indicated
Project No. : 16-46
Date : July 21, 2020

Sheet Number :

A9.9

C:\Users\michelle\Documents\16-46 Kirkland 24_CENTRALx_michelle@tca-inc.com.rvt

Provided to Builders Exchange of WA, Inc. For usage Conditions Agreement see www.bxwa.com - Always Verify Scal

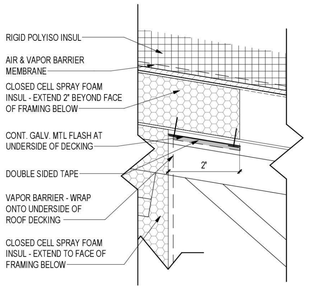

17 V.B. CONTINUITY @ SLOPED ROOF
Scale: 6" = 1'-0"

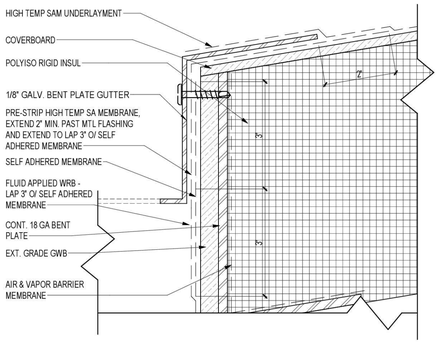

13 LOW EAVE FLASHING DIAGRAM
Scale: 6" = 1'-0"

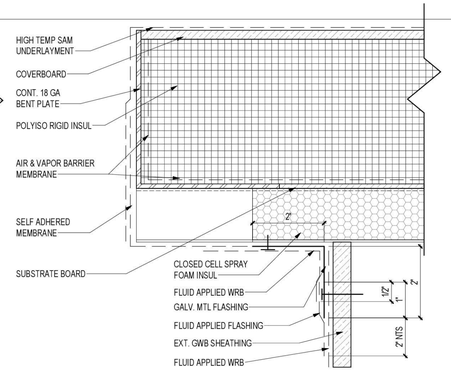

9 RAKE FLASHING DIAGRAM
Scale: 6" = 1'-0"

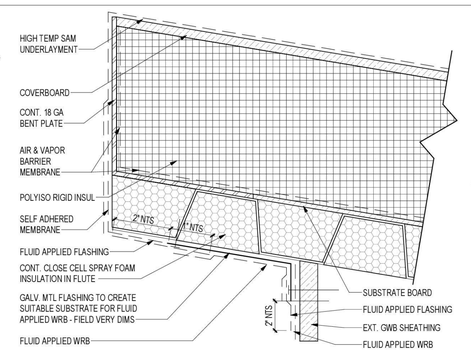

5 HIGH EAVE FLASHING DIAGRAM
Scale: 6" = 1'-0"

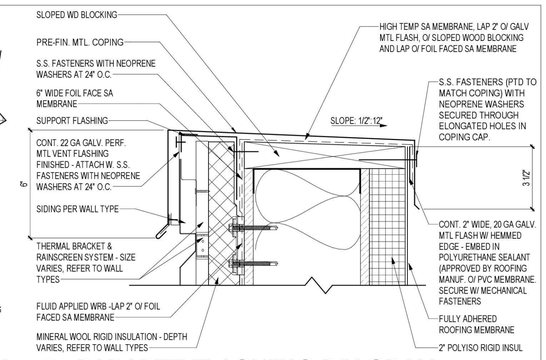

1 PARAPET FLASHING DIAGRAM
Scale: 3" = 1'-0"

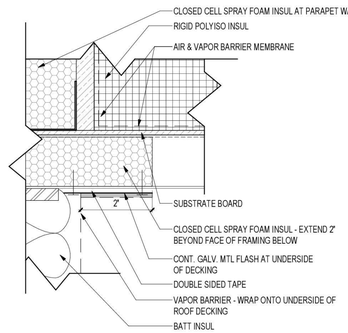

18 V.B. CONTINUITY @ FLAT ROOF
Scale: 6" = 1'-0"

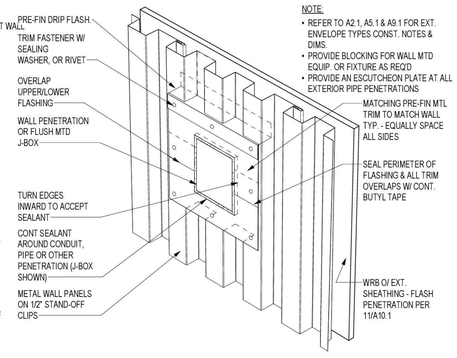

NOTE:
- REFER TO A2.1, A5.1 & A9.1 FOR EXT. ENVELOPE TYPES CONST. NOTES & DIMS.
- PROVIDE BLOCKING FOR WALL MTD EQUIP. OR FIXTURE AS REQ'D
- PROVIDE AN ESCUTCHEON PLATE AT ALL EXTERIOR PIPE PENETRATIONS

14 PENETRATION @ MTL PANEL
Scale: 3" = 1'-0"

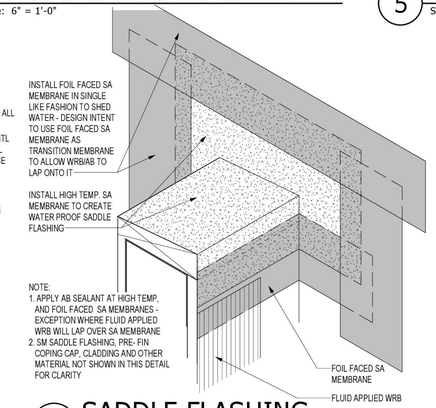

10 SADDLE FLASHING
Scale: 3" = 1'-0"

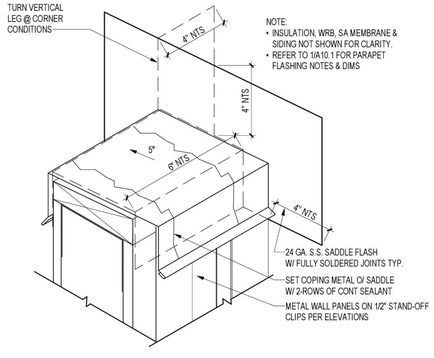

NOTE:
- INSULATION, WRB, SA MEMBRANE & SIDING NOT SHOWN FOR CLARITY.
- REFER TO 1/A10.1 FOR PARAPET FLASHING NOTES & DIMS

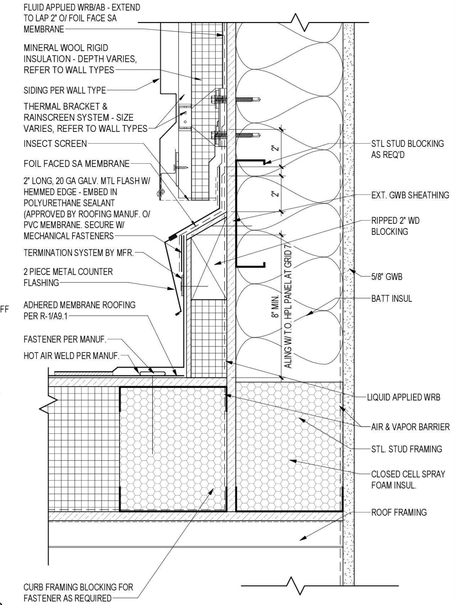

NOTE:
- REFER TO A2.1, A2.2, A5.1 AND A9.1 FOR WALL TYPES AND CONST. DIMS & NOTES
- ROOFING AND WRB SHALL BE INSTALLED PER MFR RECOMMENDED INSTRUCTIONS

2 ROOF TO WALL
Scale: 3" = 1'-0"

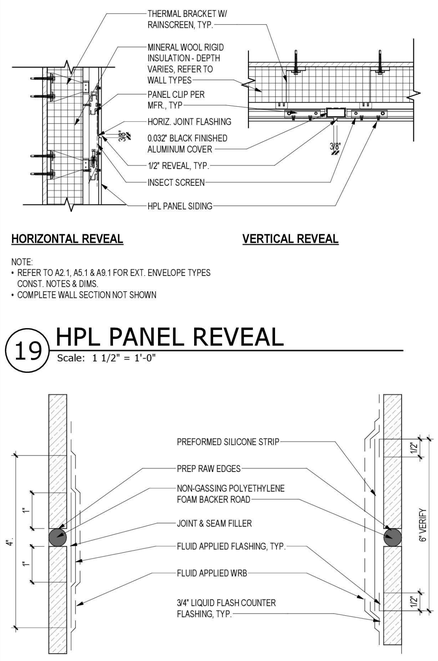

HORIZONTAL REVEAL **VERTICAL REVEAL**

NOTE:
- REFER TO A2.1, A5.1 & A9.1 FOR EXT. ENVELOPE TYPES CONST. NOTES & DIMS.
- COMPLETE WALL SECTION NOT SHOWN

19 HPL PANEL REVEAL
Scale: 1 1/2" = 1'-0"

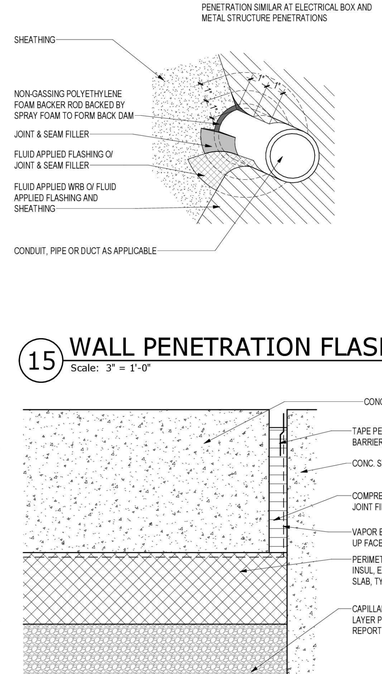

NOTE:
PENETRATION SIMILAR AT ELECTRICAL BOX AND METAL STRUCTURE PENETRATIONS

15 WALL PENETRATION FLASHING
Scale: 3" = 1'-0"

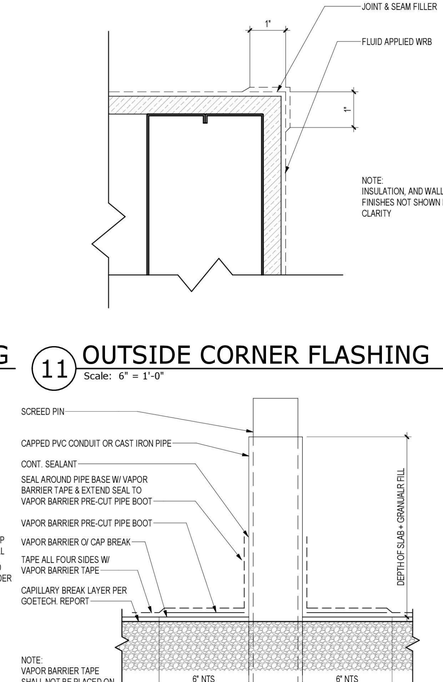

NOTE:
INSULATION, AND WALL FINISHES NOT SHOWN FOR CLARITY

11 OUTSIDE CORNER FLASHING
Scale: 6" = 1'-0"

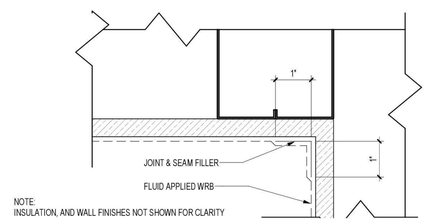

7 INSIDE CORNER FLASHING
Scale: 6" = 1'-0"

20 DEFLECTION JOINT FASHING
Scale: 6" = 1'-0"

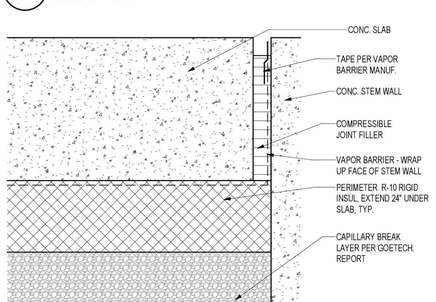

16 VAPOR BARRIER AT SLAB
Scale: 6" = 1'-0"

12 VAPOR BARRIER @ PIPE/ CONDUIT PENETRATION
Scale: 3" = 1'-0"

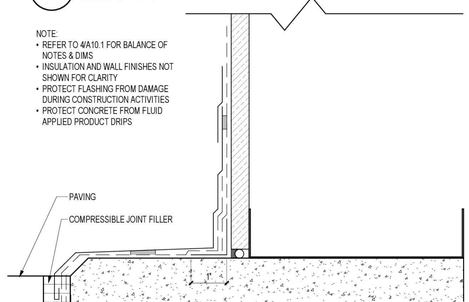

8 WALL BASE FLASHING DIAGRAM @ GRADE PAVING
Scale: 6" = 1'-0"

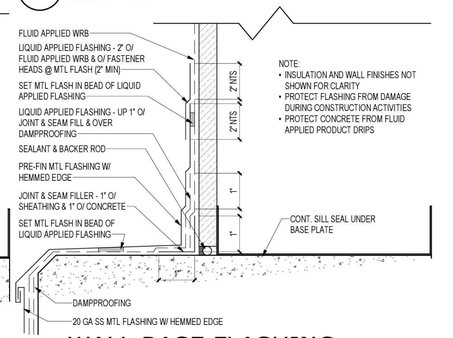

NOTE:
- INSULATION AND WALL FINISHES NOT SHOWN FOR CLARITY
- PROTECT FLASHING FROM DAMAGE DURING CONSTRUCTION ACTIVITIES
- PROTECT CONCRETE FROM FLUID APPLIED PRODUCT DRIPS

4 WALL BASE FLASHING DIAGRAM AT GRADE
Scale: 6" = 1'-0"

TCA
ARCHITECTURE + PLANNING + DESIGN
6211 ROOSEVELT WAY NORTHEAST
SEATTLE, WA 98115
tel: (206) 522-3830
fax: (206) 522-2456
6235 REGISTERED ARCHITECT
BRIAN J. HARRIS
STATE OF WASHINGTON
July 21, 2020

BID SET

No.	Description	Date:

Project Title:

Fire Station 24
City of Kirkland
Kirkland, Washington

Sheet Title:

FLASHING DIAGRAMS

Scale: As indicated
Project No. : 16-46
Date : July 21, 2020

Sheet Number :

A10.1

C:\Users\michelle\Documents\16-46 Kirkland 24_CENTRALx_michelle@tca-inc.com.rvt

Provided to Builders Exchange of WA, Inc. For usage Conditions Agreement see www.bxwa.com - Always Verify Scal

NOTE:
1. PIPE MUST BE SUPPORTED TO PREVENT VERTICAL OR LATERAL MOVEMENT
2. BOOT MUST LAP A MINIMUM OF 12" ON PIPE. APPLY SKINNING SEALANT BETWEEN BOOT AND PIPE.

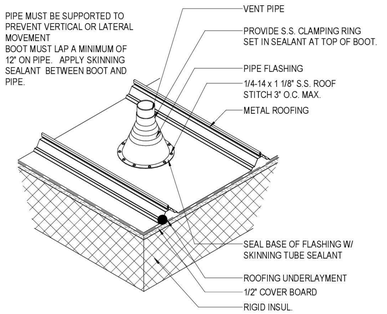

17 VENT STACK AT METAL ROOF
Scale: 1 1/2" = 1'-0"

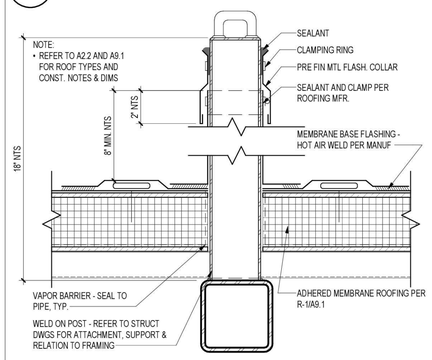

13 TYPICAL RAKE
Scale: 1 1/2" = 1'-0"

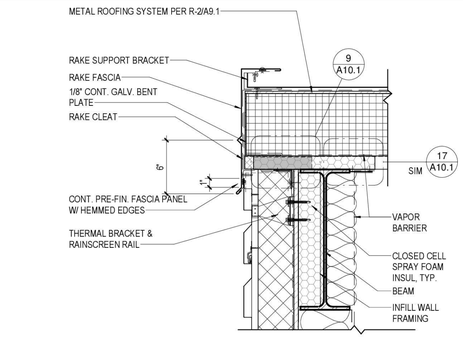

9 METAL ROOF LOW EAVE
Scale: 1 1/2" = 1'-0"

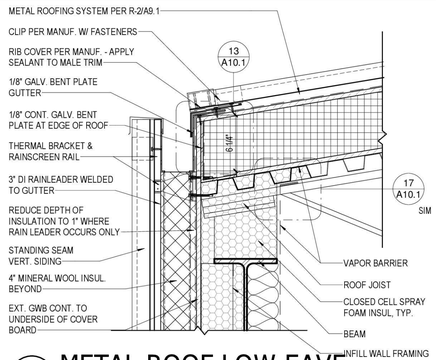

5 HIGH EAVE
Scale: 1 1/2" = 1'-0"

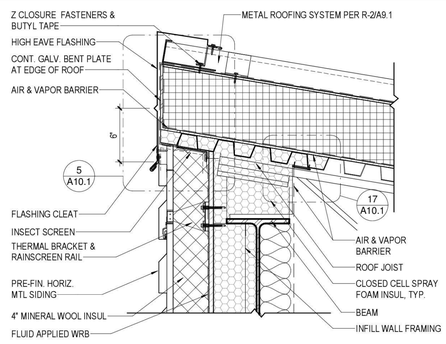

EXTERIOR DETAILS GENERAL NOTES

1. REFER TO SHEETS A2.1, A5.1 AND A9.1 FOR EXTERIOR ENVELOPE TYPES, CONSTRUCTION NOTES AND DIMENSIONS
2. REFER TO SHEET A10.1 FOR ENLARGED FLASHING DETAILS
3. ALL WALL PENETRATIONS SHALL BE FULLY SEALED
4. REFER TO ROOF PLANS FOR ROOF SLOPE
5. REFER TO STRUCTURAL SHEETS FOR SLAB, WALL AND ROOF STRUCTURE
6. THERMAL BRACKETS SHALL BE SET IN LIQUID APPLIED FLASHING O/ WRB

2 PARAPET @ HORIZ. MTL. SIDING
Scale: 1 1/2" = 1'-0"

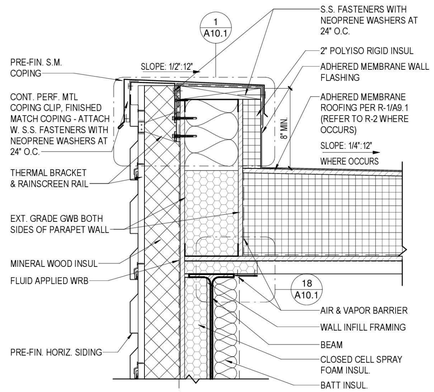

18 FALL PROTECTION
Scale: 3" = 1'-0"

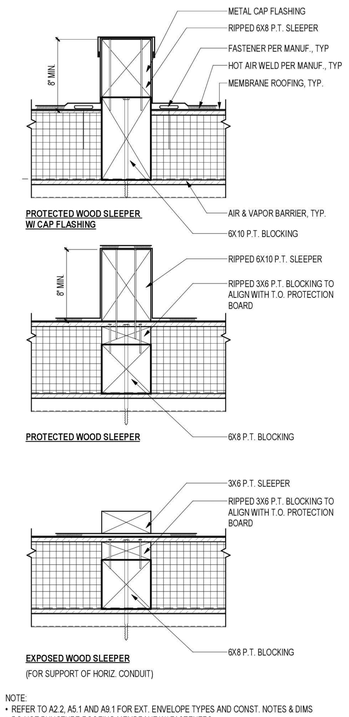

NOTE:
• REFER TO A2.2, A5.1 AND A9.1 FOR EXT. ENVELOPE TYPES AND CONST. NOTES & DIMS
• DO NOT PUNCTURE ROOFING MEMBRANE W/ FASTENERS

14 PARAPET @ BRICK VENEER
Scale: 1 1/2" = 1'-0"

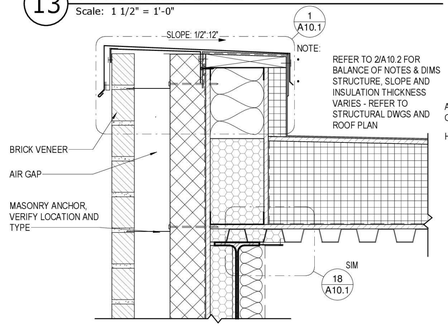

10 PARAPET @ HPL SIDING
Scale: 1 1/2" = 1'-0"

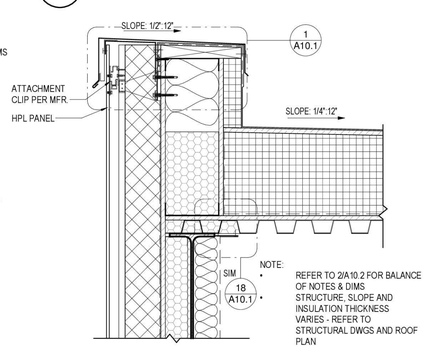

6 PARAPET AT VERT. MTL. SIDING
Scale: 1 1/2" = 1'-0"

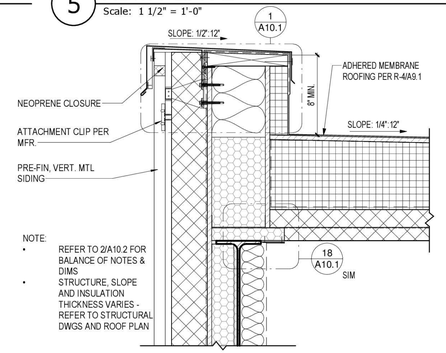

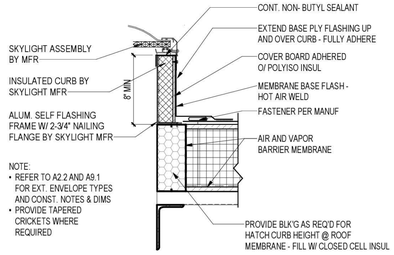

15 HEATED VENT STACK
Scale: 3" = 1'-0"

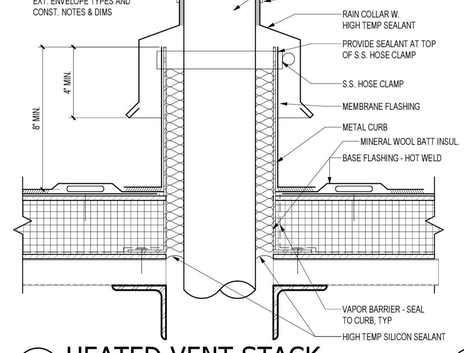

11 VENT STACK AT FLAT ROOF
Scale: 3" = 1'-0"

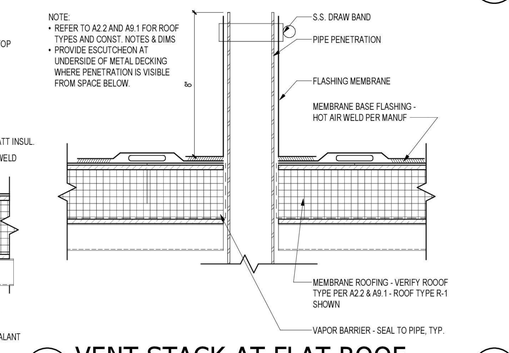

7 SKYLIGHT FLASHING
Scale: 1 1/2" = 1'-0"

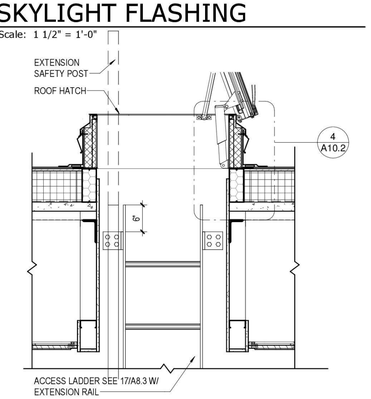

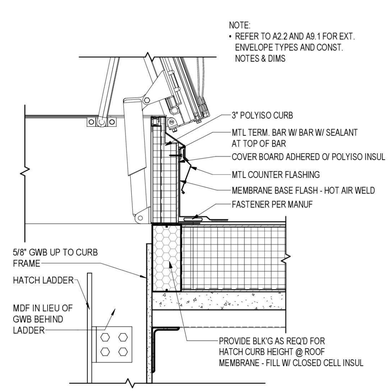

20 EQUIPMENT SUPPORT
Scale: 1 1/2" = 1'-0"

16 ROOF DRAIN
Scale: 1 1/2" = 1'-0"

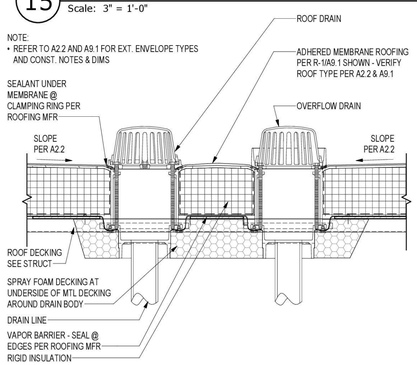

12 FAN CURB
Scale: 1 1/2" = 1'-0"

8 ROOF HATCH
Scale: 3/4" = 1'-0"

4 ROOF HATCH FLASHING
Scale: 1 1/2" = 1'-0"

T C A
ARCHITECTURE + PLANNING + DESIGN
6211 ROOSEVELT WAY
NORTHEAST
SEATTLE, WA 98115
tel: (206) 522-3830
fax: (206) 522-2456
6235 REGISTERED ARCHITECT
BRIAN J. HARRIS
STATE OF WASHINGTON

July 21, 2020

BID SET

No.	Description	Date:

Project Title:

Fire Station 24
City of Kirkland
Kirkland, Washington

Sheet Title:

EXTERIOR DETAILS

Scale: As indicated
Project No. : 16-46
Date : July 21, 2020

Sheet Number :

A10.2

C:\Users\michelle\Documents\16-46 Kirkland 24_CENTRAL\x_michelle@tca-inc.com.rvt

Provided to Builders Exchange of WA, Inc. For usage Conditions Agreement see www.bxwa.com - Always Verify Scal

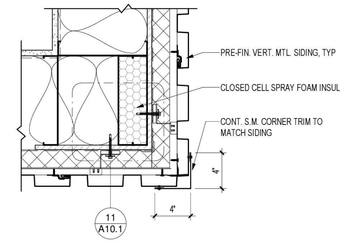

17 OUTSIDE CRNR - VERT. MTL. SIDING

Scale: 1 1/2" = 1'-0"

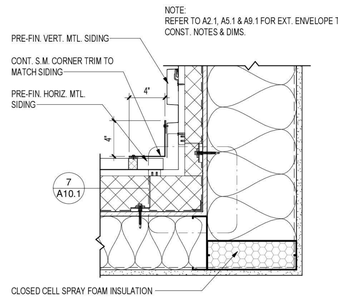

13 INSIDE CRNR - VERT. TO HORIZ. SIDING

Scale: 1 1/2" = 1'-0"

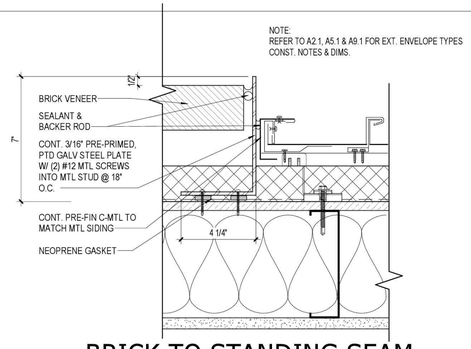

9 BRICK TO STANDING SEAM VERT. TRANS.

Scale: 3" = 1'-0"

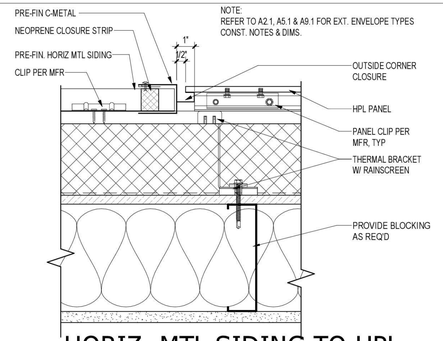

5 HORIZ. MTL SIDING TO HPL VERT. TRANS.

Scale: 3" = 1'-0"

EXTERIOR DETAILS GENERAL NOTES

1. REFER TO SHEETS A2.1, A5.1 AND A9.1 FOR EXTERIOR ENVELOPE TYPES, CONSTRUCTION NOTES AND DIMENSIONS
2. REFER TO SHEET A10.1 FOR ENLARGED FLASHING DETAILS
3. ALL WALL PENETRATIONS SHALL BE FULLY SEALED
4. REFER TO ROOF PLANS FOR ROOF SLOPE
5. REFER TO STRUCTURAL SHEETS FOR SLAB, WALL AND ROOF STRUCTURE
6. THERMAL BRACKETS SHALL BE SET IN LIQUID APPLIED FLASHING O/ WRB

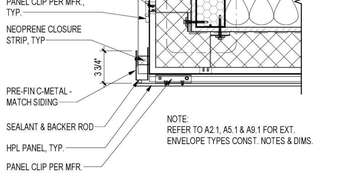

18 VERT. SIDING TO HPL PANEL SIDING TRANSITION

Scale: 1 1/2" = 1'-0"

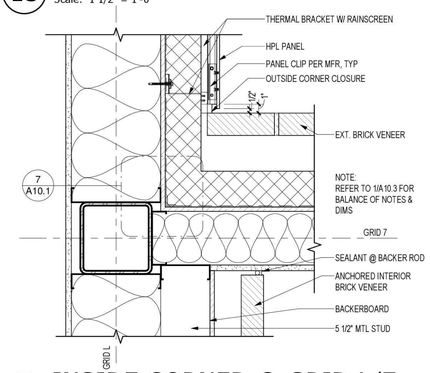

14 INSIDE CORNER @ GRID L/7

Scale: 1 1/2" = 1'-0"

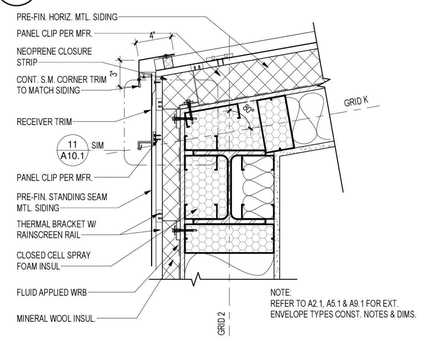

10 OUTSIDE CRNR @ GRID K/2

Scale: 1 1/2" = 1'-0"

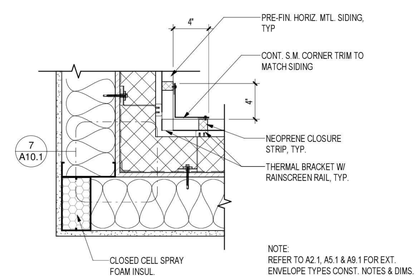

6 INSIDE CRNR - HORIZ. SIDING

Scale: 1 1/2" = 1'-0"

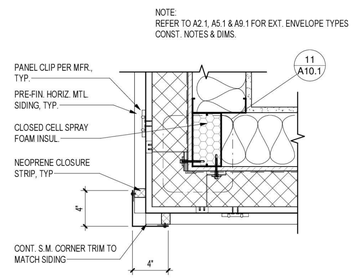

2 OUTSIDE CRNR - HORIZ. SIDING

Scale: 1 1/2" = 1'-0"

19 OUTSIDE CRNR - HPL PANEL MTL SIDING

Scale: 1 1/2" = 1'-0"

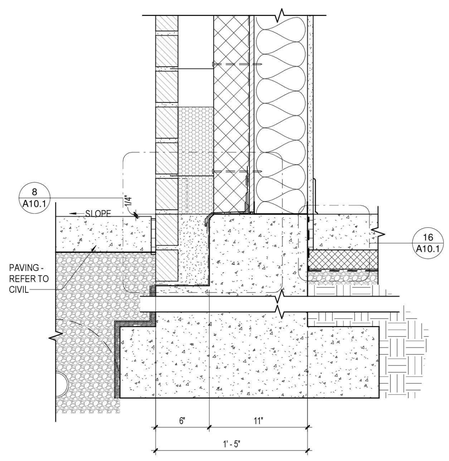

16 FTG @ PAVING W/ BRICK VENEER

Scale: 1 1/2" = 1'-0"

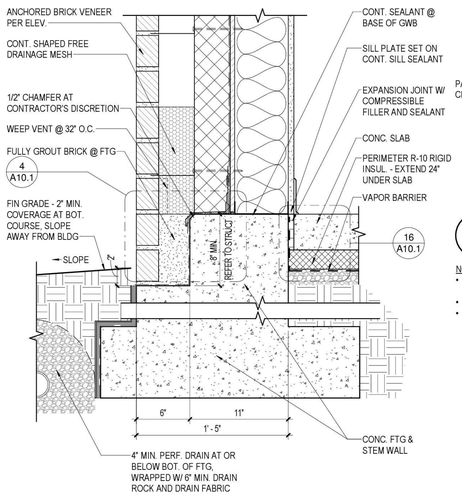

12 FTG @ GRADE W/ BRICK VENEER

Scale: 1 1/2" = 1'-0"

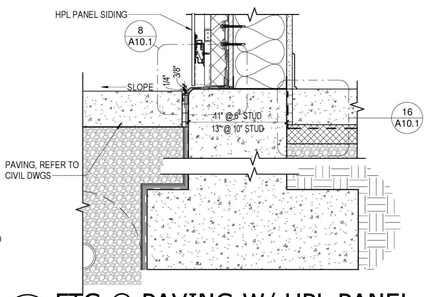

7 FTG @ PAVING W/ HPL PANEL

Scale: 1 1/2" = 1'-0"

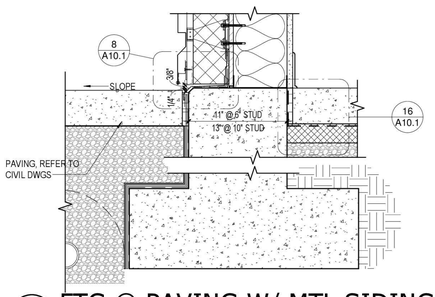

3 FTG @ PAVING W/ MTL SIDING

Scale: 1 1/2" = 1'-0"

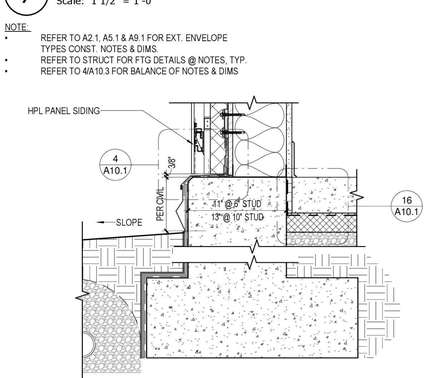

8 FTG @ GRADE W/ HPL PANEL

Scale: 1 1/2" = 1'-0"

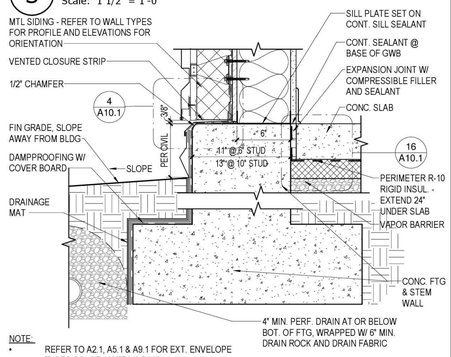

4 FTG @ GRADE W/ MTL SIDING

Scale: 1 1/2" = 1'-0"

TCA
ARCHITECTURE + PLANNING + DESIGN
6211 ROOSEVELT WAY NORTHEAST
SEATTLE, WA 98115
tel: (206) 522-3830
fax: (206) 522-2456

6235 REGISTERED ARCHITECT
BRIAN J. HARRIS
STATE OF WASHINGTON

July 21, 2020

BID SET

No.	Description	Date:

Project Title:

Fire Station 24

City of Kirkland
Kirkland, Washington

Sheet Title:

EXTERIOR DETAILS

Scale: As indicated
Project No. : 16-46
Date : July 21, 2020

Sheet Number :

A10.3

C:\Users\michelle\Documents\16-46 Kirkland 24_CENTRAL_michelle@tca-inc.com.rvt

Provided to Builders Exchange of WA, Inc. For usage Conditions Agreement see www.bxwa.com - Always Verify Scal

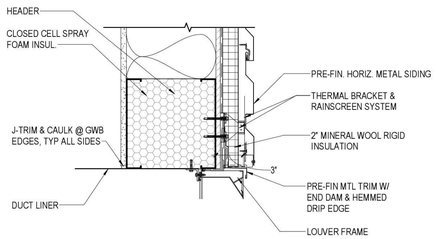

17 LOUVER HEAD @ MTL SIDING
Scale: 1 1/2" = 1'-0"

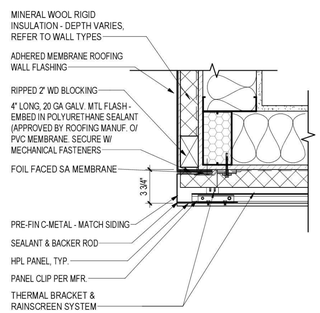

13 OUTSIDE CRNR - HPL PANEL TO PVC ROOFING
Scale: 1 1/2" = 1'-0"

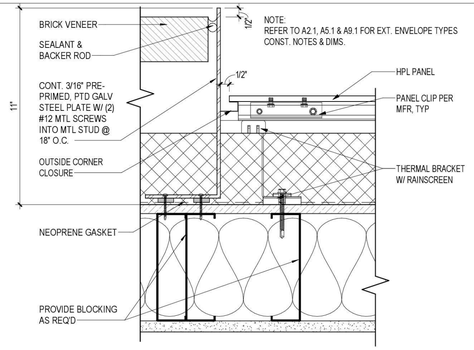

9 BRICK TO HPL VERT. TRANS.
Scale: 3" = 1'-0"

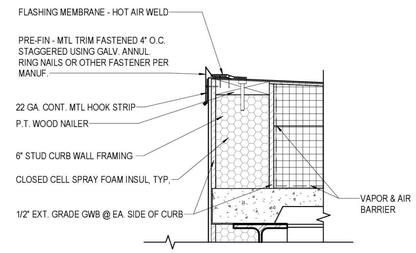

5 MECH. ROOF EDGE FLASHING
Scale: 1 1/2" = 1'-0"

EXTERIOR DETAILS GENERAL NOTES

1. REFER TO SHEETS A2.1, A5.1 AND A9.1 FOR EXTERIOR ENVELOPE TYPES, CONSTRUCTION NOTES AND DIMENSIONS
2. REFER TO SHEET A10.1 FOR ENLARGED FLASHING DETAILS
3. ALL WALL PENETRATIONS SHALL BE FULLY SEALED
4. REFER TO ROOF PLANS FOR ROOF SLOPE
5. REFER TO STRUCTURAL SHEETS FOR SLAB, WALL AND ROOF STRUCTURE
6. THERMAL BRACKETS SHALL BE SET IN LIQUID APPLIED FLASHING O/ WRB

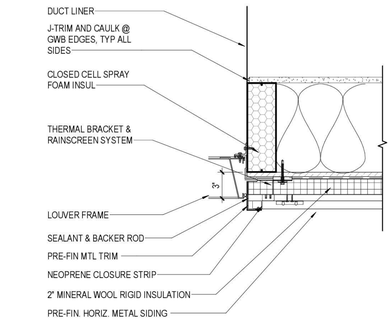

18 LOUVER JAMB @ MTL. SIDING
Scale: 1 1/2" = 1'-0"

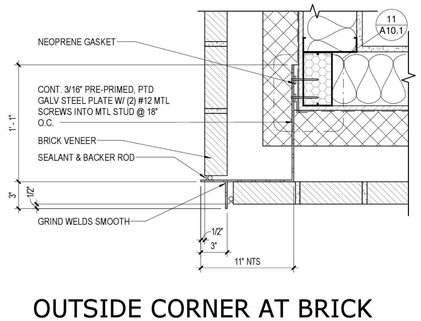

14 OUTSIDE CORNER AT BRICK @ 6" STUD
Scale: 1 1/2" = 1'-0"

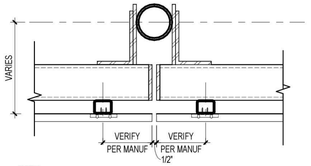

10 MECH. SCREEN JOINT
Scale: 1 1/2" = 1'-0"

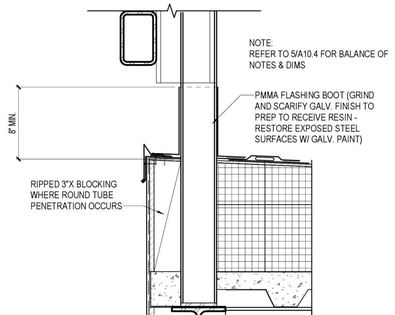

6 MECH SCREEN FLASHING
Scale: 1 1/2" = 1'-0"

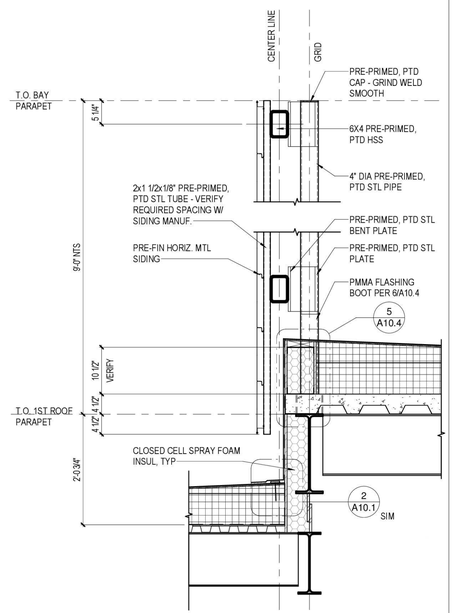

3 MECH SCREEN SECTION
Scale: 3/4" = 1'-0"

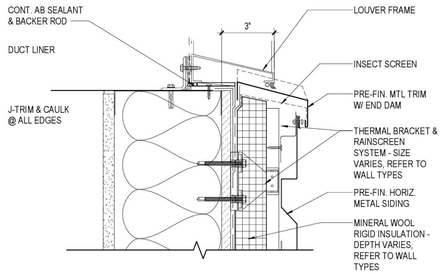

19 LOUVER SILL @ MTL SIDING
Scale: 3" = 1'-0"

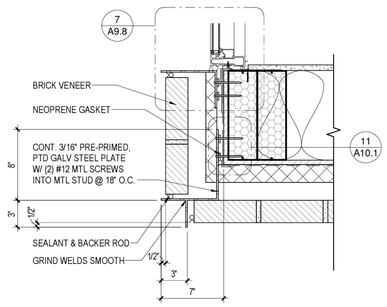

15 OUTSIDE CORNER AT BRICK @ 10" STUD
Scale: 1 1/2" = 1'-0"

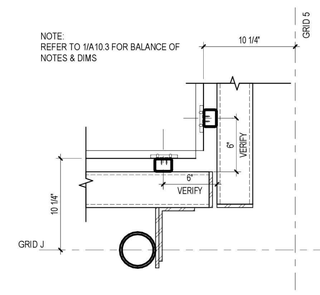

11 MECH. SCREEN INSIDE CORNER
Scale: 1 1/2" = 1'-0"

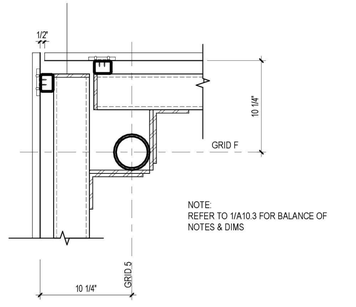

7 MECH. SCREEN OUTSIDE CORNER
Scale: 1 1/2" = 1'-0"

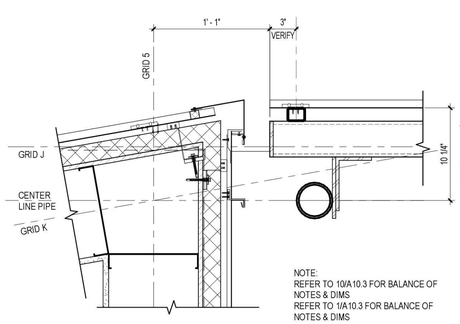

12 MECH. SCREEN @ GRID J/4
Scale: 1 1/2" = 1'-0"

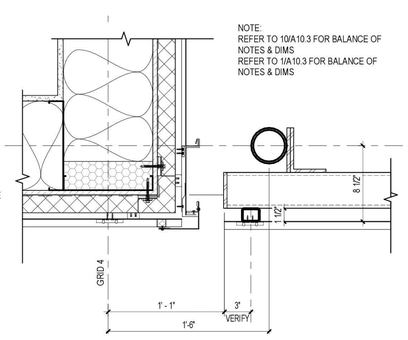

8 MECH. SCREEN @ GRID L/4
Scale: 1 1/2" = 1'-0"

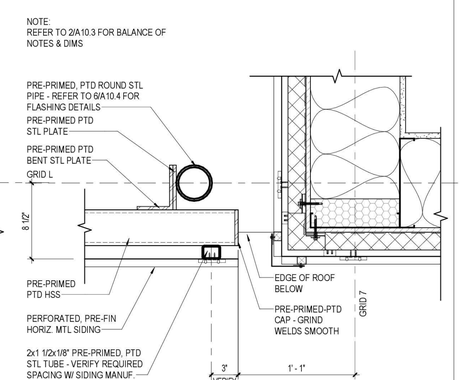

4 MECH. SCREEN @ GRID L/7
Scale: 1 1/2" = 1'-0"

TCA
ARCHITECTURE + PLANNING + DESIGN
6211 ROOSEVELT WAY NORTHEAST
SEATTLE, WA 98115
tel: (206) 522-3830
fax: (206) 522-2456

6235 REGISTERED ARCHITECT
BRIAN J. HARRIS
STATE OF WASHINGTON

July 21, 2020

BID SET

No.	Description	Date:

Project Title:

Fire Station 24
City of Kirkland
Kirkland, Washington

Sheet Title:
EXTERIOR DETAILS

Scale: As indicated
Project No. : 16-46
Date : July 21, 2020

Sheet Number :
A10.4

C:\Users\michelle\Documents\16-46 Kirkland 24_CENTRALx_michelle@tca-inc.com.rvt

Provided to Builders Exchange of WA, Inc. For usage Conditions Agreement see www.bxwa.com - Always Verify Scal

EXTERIOR DETAILS GENERAL NOTES

1. REFER TO SHEETS A2.1, A5.1 AND A9.1 FOR EXTERIOR ENVELOPE TYPES, CONSTRUCTION NOTES AND DIMENSIONS
2. REFER TO SHEET A10.1 FOR ENLARGED FLASHING DETAILS
3. ALL WALL PENETRATIONS SHALL BE FULLY SEALED
4. REFER TO ROOF PLANS FOR ROOF SLOPE
5. REFER TO STRUCTURAL SHEETS FOR SLAB, WALL AND ROOF STRUCTURE
6. THERMAL BRACKETS SHALL BE SET IN LIQUID APPLIED FLASHING O/ WRB

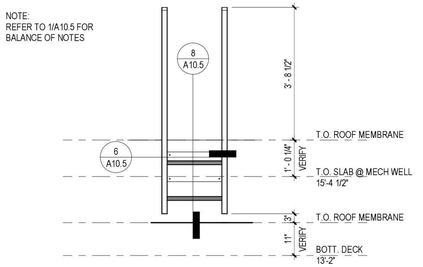

5 ACCESS LADDER @ ROOF EDGE ELEVATION

Scale: 1/2" = 1'-0"

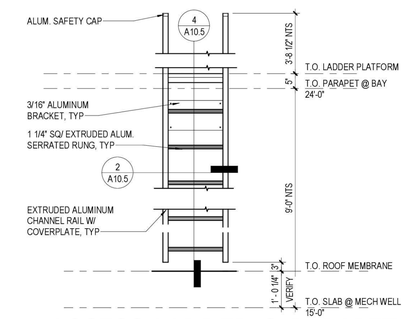

1 ACCESS LADDER @ PARAPET ELEVATION

Scale: 1/2" = 1'-0"

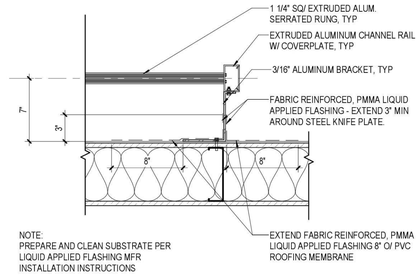

6 ACCESS LADDER @ ROOF EDGE PLAN

Scale: 1 1/2" = 1'-0"

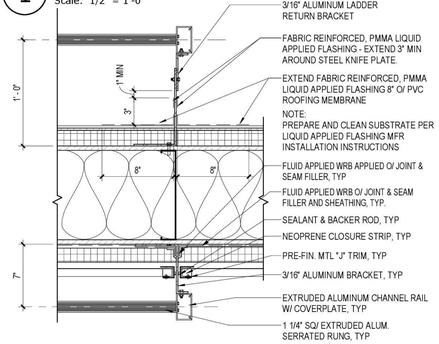

2 ACCESS LADDER @ PARAPET PLAN

Scale: 1 1/2" = 1'-0"

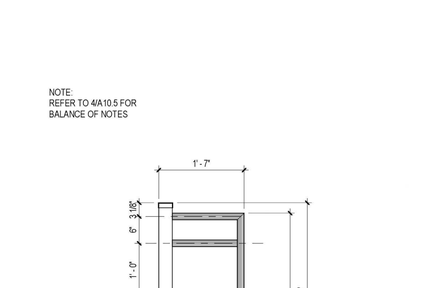

8 ACCESS LADDER @ ROOF EDGE SECTION

Scale: 3/4" = 1'-0"

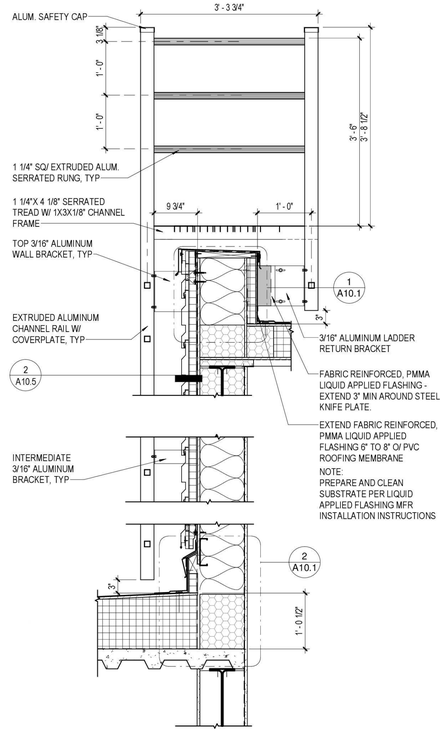

4 ACCESS LADDER @ PARAPET SECTION

Scale: 3/4" = 1'-0"

TCA
ARCHITECTURE + PLANNING + DESIGN
6211 ROOSEVELT WAY
NORTHEAST
SEATTLE, WA 98115
tel: (206) 522-3830
fax: (206) 522-2456

6235 REGISTERED ARCHITECT
BRIAN J. HARRIS
STATE OF WASHINGTON

July 21, 2020

BID SET

No.	Description	Date:

Project Title:

Fire Station 24

City of Kirkland
Kirkland, Washington

Sheet Title:

EXTERIOR DETAILS

Scale: As indicated
Project No. : 16-46
Date : July 21, 2020

Sheet Number :

A10.5

C:\Users\michelle\Documents\16-46 Kirkland 24_CENTRAL\x_michelle@tca-inc.com.rvt

Provided to Builders Exchange of WA, Inc. For usage Conditions Agreement see www.bxwa.com - Always Verify Scal

General Structural Notes

(THE FOLLOWING APPLY UNLESS SHOWN OTHERWISE ON THE DRAWINGS.)

CRITERIA:

1. ALL MATERIALS, WORKMANSHIP, DESIGN, AND CONSTRUCTION SHALL CONFORM TO THE DRAWINGS, SPECIFICATIONS, AND THE INTERNATIONAL BUILDING CODE (IBC) WITH WASHINGTON STATE ADMINISTRATIVE CODE AMENDMENTS, 2015 EDITION.

2. DESIGN LOADING CRITERIA:

   RISK CATEGORY SBC TABLE 1604.5 IV
   ROOF SNOW LOAD . . . . . 30 PSF (INCLUDES I_S = 1.2)
   CANOPIES . . . . . SAME AS ROOF SNOW LOAD
   GUARDRAILS/BALCONY RAILS . . . . . 50 PLF OR 200 LB CONCENTRATED LOAD
   MECHANICAL UNITS . . . . . SEE DRAWINGS FOR MAXIMUM ALLOWABLE WEIGHTS

   EARTHQUAKE . . . . . SEISMIC DESIGN CATEGORY D
   S_S = 1.26, S_1 = 0.44, S_{DS} = 0.84, S_{D1} = 0.43
   MODAL RESPONSE SPECTRUM ANALYSIS
   BUCKLING RESTRAINED BRACED FRAMES
   R = 8, Ω_0 = 2.5, I_E = 1.5
   Cs = 0.16, BASE SHEAR = 95 KIPS
   STORY DRIFT LIMIT = 0.01 * H
   CALCULATED MAXIMUM DRIFT = 0.008 * H

   WIND . . . . . 115 MPH, EXPOSURE "B", K_{zt} = 1.0
   WIND (CLADDING/ENCLOSURE ELEMENT DESIGN PRESSURES) . . . . . 38/23 PSF MAX. AT WALLS (LRFD/ASD)
   48/29 PSF GROSS UPLIFT AT ROOF (LRFD/ASD)
   WIND PRESSURES BASED ON LESS THAN 10 SQUARE FOOT TRIBUTARY AREAS NEAR WALL CORNERS OR ROOF EDGES (EXCLUDING CORNER ZONES AT ROOF). REDUCED DESIGN PRESSURES MAY BE CALCULATED IN ACCORDANCE WITH ASCE 7-10 CHAPTER 30.

   SEE DRAWINGS FOR ADDITIONAL LOADING CRITERIA

3. STRUCTURAL DRAWINGS SHALL BE USED IN CONJUNCTION WITH ARCHITECTURAL DRAWINGS AND ALL OTHER CONTRACT DOCUMENTS FOR BIDDING AND CONSTRUCTION. CONTRACTOR SHALL VERIFY DIMENSIONS AND CONDITIONS FOR COMPATIBILITY AND SHALL NOTIFY ARCHITECT OF ALL DISCREPANCIES PRIOR TO CONSTRUCTION. IT IS THE CONTRACTOR'S RESPONSIBILITY TO COORDINATE BUILDING LAYOUT DIMENSIONS (GRID LAYOUTS, SITE COORDINATES, ETC.) AMONGST ALL TRADES, INCLUDING SHOP FABRICATED ITEMS.

4. CONTRACTOR SHALL PROVIDE TEMPORARY BRACING, BOTH FOR VERTICAL LOADS AND LATERAL STABILITY, FOR THE STRUCTURE AND STRUCTURAL COMPONENTS UNTIL ALL FINAL CONNECTIONS HAVE BEEN COMPLETED IN ACCORDANCE WITH THE DRAWINGS.

5. CONTRACTOR SHALL BE RESPONSIBLE FOR ALL SAFETY PRECAUTIONS AND THE METHODS, TECHNIQUES, SEQUENCES OR PROCEDURES REQUIRED TO PERFORM THE WORK.

6. CONTRACTOR-INITIATED CHANGES SHALL BE SUBMITTED IN WRITING TO THE ARCHITECT AND STRUCTURAL ENGINEER FOR APPROVAL PRIOR TO FABRICATION OR CONSTRUCTION. CHANGES SHOWN ON SHOP DRAWINGS ONLY WILL NOT SATISFY THIS REQUIREMENT.

7. DRAWINGS INDICATE GENERAL AND TYPICAL DETAILS OF CONSTRUCTION. WHERE CONDITIONS ARE NOT SPECIFICALLY INDICATED BUT ARE OF SIMILAR CHARACTER TO DETAILS SHOWN, SIMILAR DETAILS OF CONSTRUCTION SHALL BE USED, SUBJECT TO REVIEW AND APPROVAL BY THE ARCHITECT AND THE STRUCTURAL ENGINEER.

8. ALL STRUCTURAL SYSTEMS COMPOSED OF COMPONENTS TO BE FIELD ERECTED SHALL BE SUPERVISED BY THE SUPPLIER DURING MANUFACTURING, DELIVERY, HANDLING, STORAGE AND ERECTION IN ACCORDANCE WITH INSTRUCTIONS PREPARED BY THE SUPPLIER.

9. SEISMIC BRACING AND/OR GRAVITY SUPPORT AND ANCHORAGE OF ALL MECHANICAL OR ELECTRICAL EQUIPMENT SHALL BE DESIGNED BY A PROFESSIONAL ENGINEER REGISTERED IN THE STATE OF WASHINGTON, EXCEPT FOR ELEMENTS SPECIFICALLY SHOWN AND DETAILED ON THE STRUCTURAL DRAWINGS. THE MECHANICAL/ELECTRICAL CONTRACTOR MUST HIRE THE ENGINEER AND IS RESPONSIBLE FOR ALL COSTS RELATED TO THE PURCHASE AND INSTALLATION OF NECESSARY SUPPORTS, BRACING AND ANCHORAGE. SEISMIC BRACING AND ANCHORAGE DESIGN AND CONSTRUCTION SHALL COMPLY WITH CHAPTER 13 OF ASCE 7-10. SEE GENERAL STRUCTURAL NOTE 13 FOR ADDITIONAL INFORMATION.

10. SHOP DRAWINGS FOR REINFORCING STEEL (FOR BOTH CONCRETE AND MASONRY CONSTRUCTION), STRUCTURAL STEEL, OPEN WEB STEEL JOISTS, METAL DECKING, AND COLD-FORMED METAL FRAMING, SHALL BE SUBMITTED TO THE ARCHITECT AND STRUCTURAL ENGINEER FOR REVIEW PRIOR TO FABRICATION OF THESE ITEMS.

11. SHOP DRAWING REVIEW: DIMENSIONS AND QUANTITIES ARE NOT REVIEWED BY THE ENGINEER OF RECORD, AND THEREFORE MUST BE VERIFIED BY THE CONTRACTOR. THE CONTRACTOR SHALL REVIEW AND STAMP DRAWINGS PRIOR TO REVIEW BY ENGINEER OF RECORD. SUBMITTALS SHALL INCLUDE A REPRODUCIBLE AND ONE COPY. THE REPRODUCIBLE SHALL BE MARKED AND RETURNED.

    SHOP DRAWING SUBMITTALS PROCESSED BY THE ENGINEER ARE NOT CHANGE ORDERS. THE PURPOSE OF SHOP DRAWING SUBMITTALS BY THE CONTRACTOR IS TO DEMONSTRATE TO THE ENGINEER THAT THE CONTRACTOR UNDERSTANDS THE DESIGN CONCEPT BY INDICATING WHICH MATERIAL IS INTENDED TO BE FURNISHED AND INSTALLED AND BY DETAILING THE INTENDED FABRICATION AND INSTALLATION METHODS. IF DEVIATIONS, DISCREPANCIES, OR CONFLICTS BETWEEN SHOP DRAWING SUBMITTALS AND THE CONTRACT DOCUMENTS ARE DISCOVERED EITHER PRIOR TO OR AFTER SHOP DRAWING SUBMITTALS ARE PROCESSED BY THE ENGINEER, THE DESIGN DRAWINGS AND SPECIFICATIONS SHALL CONTROL AND SHALL BE FOLLOWED.

12. DEFERRED SUBMITTALS SHALL BE DESIGNED BY AN ENGINEER REGISTERED IN THE STATE OF WASHINGTON. THE COMPONENT DESIGNER SHALL BE A REGISTERED STRUCTURAL ENGINEER IF REQUIRED BY THE BUILDING OFFICIAL OF THE LOCAL JURISDICTION. BUILDING COMPONENT SUBMITTALS SHALL INCLUDE THE DESIGNING PROFESSIONAL ENGINEER'S STAMP AND SHALL BE APPROVED BY THE COMPONENT DESIGNER PRIOR TO CURSORY REVIEW BY THE ENGINEER OF RECORD FOR LOADS IMPOSED ON THE BASIC STRUCTURE. THE COMPONENT DESIGNER IS RESPONSIBLE FOR CODE CONFORMANCE INCLUDING ACCOMMODATION FOR STRUCTURAL DISPLACEMENT PER ASCE 7-10 SECTION 13.3.2. AND ALL NECESSARY CONNECTIONS NOT SPECIFICALLY CALLED OUT ON ARCHITECTURAL OR STRUCTURAL DRAWINGS. DEFERRED SUBMITTALS SHALL INDICATE MAGNITUDE AND DIRECTION OF ALL LOADS IMPOSED ON BASIC STRUCTURE. DESIGN CALCULATIONS SHALL BE INCLUDED IN THE SUBMITTAL. THE CONTRACTOR SHALL FORWARD DEFERRED SUBMITTALS TO THE BUILDING OFFICIAL WHERE REQUIRED.

    THE FOLLOWING BUILDING COMPONENTS SHALL BE DEFERRED SUBMITTALS FOR THIS PROJECT:
    - OPEN WEB STEEL JOIST AND JOIST GIRDER FRAMING SYSTEMS (SEE NOTE 38)
    - BUCKLING RESTRAINED BRACES AND GUSSET PLATE CONNECTIONS (SEE NOTE 44)
    - FALL ARREST ANCHORS
    - AGGREGATE PIERS (SEE NOTE 15)

STATEMENT OF SPECIAL INSPECTIONS (STRUCTURAL):

13. STATEMENT OF SPECIAL INSPECTIONS – STRUCTURAL ITEMS (SEISMIC DESIGN CATEGORY D):

    DEFINITIONS:
    THE SEISMIC FORCE RESISTING SYSTEM FOR THIS STRUCTURE CONSISTS PRIMARILY OF BRACED FRAMES, FLOOR/ROOF DIAPHRAGMS, AND STRUT MEMBERS AS SPECIFIED ON THE DRAWINGS. SEE THE LEGEND OF PLAN SHEETS FOR ADDITIONAL INFORMATION DEFINING MEMBER LOCATIONS.

    SPECIAL INSPECTIONS AND TESTING SHALL BE PERFORMED BY THE OWNER APPOINTED INSPECTION AGENCY IN ACCORDANCE WITH CHAPTER 17 OF THE IBC WITH REPORTS PER IBC SECTION 1704.2.4 SUBMITTED TO THE OWNER, ARCHITECT, STRUCTURAL ENGINEER, CONTRACTOR, AND BUILDING OFFICIAL FOR EACH DAY SPECIAL INSPECTIONS OR TESTING IS PERFORMED. THESE INSPECTIONS ARE IN ADDITION TO THE INSPECTIONS SPECIFIED IN IBC SECTION 110. SEE TABLES BELOW FOR ADDITIONAL INFORMATION.

STRUCTURAL ITEMS	SPECIAL INSPECTION FREQUENCY	IBC REFERENCE
STRUCTURAL STEEL FABRICATION,ERECTION, AND NONDESTRUCTIVE TESTING*		
SPECIAL INSPECTION AND NONDESTRUCTIVE TESTING FOR STRUCTURAL STEEL SHALL BE IN ACCORDANCE WITH THE QUALITY ASSURANCE (QA) INSPECTION REQUIREMENTS OF AISC 360-10 CHAPTER N. CONTINUOUS INSPECTION SHALL BE PERFORMED AT "P" TASKS DEFINED IN AISC 360-10; PERIODIC INSPECTION SHALL BE PERFORMED AT "O" TASKS DEFINED IN AISC 360-10. ADDITIONAL SPECIAL INSPECTION AND TESTING REQUIREMENTS FOR THE STRUCTURAL STEEL SEISMIC SYSTEM SHALL BE PER AISC 341-10 CHAPTER J AS INDICATED BELOW.		
SHOP AND FIELD WELDING	CONTINUOUS/PERIODIC (QA PER AISC 360 CH. N5.4)	1705.2.1
HIGH STRENGTH BOLTING	CONTINUOUS/PERIODIC (QA AISC 360 CH. N5.6)	1705.2.1
METAL DECKING	PERIODIC	1705.2.2
HEADED STUDS (COMPOSITE CONSTRUCTION)	CONTINUOUS (QA PER STEEL DECK INSTITUTE)	1705.2.1
MATERIAL VERIFICATION (IDENTIFICATION MARKS AND MANUFACTURER'S TEST REPORTS)	PERIODIC	1705.2.1
STRUCTURAL STEEL SEISMIC SYSTEM (INSPECTION AND TESTING)	CONTINUOUS/PERIODIC (QA PER AISC 341 CH. J)	1705.12.1 & 1705.13.1
COLD-FORMED STEEL FRAMING		
FIELD WELDING	PERIODIC	1705.11.2, 1705.12.3
FASTENERS, BOLTS, STRAPS, HOLDOWNS, ETC.	PERIODIC FOR CONNECTIONS OF ALL MEMBERS OF THE SEISMIC AND WIND FORCE RESISTING SYSTEM INCLUDING DIAPHRAGMS	1705.11.2 & 1705.12.3
CONCRETE (SEE GENERAL STRUCTURAL NOTE 22 FOR ADDITIONAL REQUIREMENTS)**		
REINFORCING PLACEMENT	PERIODIC AND PRIOR TO ALL CONCRETE POURS	TABLE 1705.3 ITEM 1
REINFORCING WELDING	PERIODIC (CONTINUOUS FOR ALL WELDS GREATER THAN 5/16")	TABLE 1705.3 ITEM 2c
ANCHOR BOLT PLACEMENT	PERIODIC AND PRIOR TO ALL CONCRETE POURS	TABLE 1705.3 ITEM 3
CONCRETE PLACEMENT***	CONTINUOUS	TABLE 1705.3 ITEM 5,6&7
CURING & FORMWORK PROCEDURES	PERIODIC	TABLE 1705.3 ITEM 8,11&12
MASONRY (SEE GENERAL STRUCTURAL NOTE 31 FOR ADDITIONAL REQUIREMENTS)		
LEVEL C SPECIAL INSPECTION	PERIODIC (CONTINUOUS FOR GROUT SPACE, GROUTING, ANCHORAGE, AND WELDING OF REINFORCING BARS)	TABLE 3.1.2 TMS 402/ACI 530/ ASCE 5-13
EXPANSION BOLTS & INSERTS	PERIODIC INCLUDING TORQUE TESTS IN ACCORDANCE WITH APPROVED ICC-ES REPORTS	TABLE 1705.3 ITEM 4
EPOXY GROUTED RODS OR REBAR	PERIODIC INCLUDING INSPECTION OF EMBEDMENT DEPTH AND HOLE CLEANLINESS PRIOR TO ALL INSTALLATIONS (CONTINUOUS FOR UPWARDLY INCLINED ANCHORS)	TABLE 1705.3 ITEM 4, ACI 318-14 SECTION 17.8
SOIL COMPACTION	CONTINUOUS	1705.6

* STRUCTURAL STEEL QUALITY ASSURANCE INSPECTIONS, EXCEPT NONDESTRUCTIVE TESTING, MAY BE WAIVED IF APPROVED BY THE OWNER AND BUILDING OFFICIAL FOR WORK PERFORMED ON THE PREMISES OF A FABRICATOR REGISTERED AND APPROVED TO PERFORM SUCH WORK WITHOUT SPECIAL INSPECTION IN ACCORDANCE WITH IBC SECTION 1704.2.5.1.
** EXCEPTIONS 1 THRU 5 PER IBC SECTION 1705.3 SHALL NOT APPLY TO CONCRETE WORK ON THIS PROJECT.
*** FREQUENCY OF CONCRETE LABORATORY TESTING SHALL BE IN ACCORDANCE WITH ACI 318-14 SECTION 26.12.2 UNLESS OTHERWISE NOTED IN THE PROJECT SPECIFICATIONS.

ARCH, MECH, & ELEC ITEMS	SEISMIC DESIGN REQUIREMENTS (ASCE 7-10 CHAPTER 13)	PERIODIC SPECIAL INSPECTION AS SPECIFIED PER IBC CHAPTER 17
EXTERIOR WALLS, VENEER & CLADDING	ASCE 7-10 SECTION 13.5.3	REQUIRED FOR WALL FRAMING, FOR FASTENING OF VENEER OR CLADDING EXCEEDING 5 PSF (IBC 1705.12.5)
SUSPENDED CEILINGS	ASCE 7-10 SECTION 13.5.6	INSPECTIONS PER IBC SECTION 110 AND ASCE 7 13.5.6.2.2 AS REQUIRED
PARTITION WALLS FASTENING	ASCE 7-10 SECTION 13.5.8	REQUIRED DURING ERECTION AND FOR WALLS > 15 PSF (IBC 1705.12.5)
GLAZING SYSTEMS	ASCE 7-10 SECTION 13.5.9	NOT REQUIRED
LIFE SAFETY COMPONENTS INCLUDING FIRE PUMPS, EMERGENCY GENERATORS, SMOKE EVACUATION FANS, AND COMPONENTS WITH HAZARDOUS COMBUSTIBLE, OR HIGHLY TOXIC CONTENTS (Ip=1.5 PER ASCE 7-10 SECTION 13.1.3)	ASCE 7-10 SECTION 13.6 AND IBC 1705.13.2	REQUIRED FOR VERIFICATION OF CERTIFICATE OF COMPLIANCE LABEL ON COMPONENT (IBC 1705.12.4)
INSTALLATION AND ANCHORAGE OF SPRINKLER SYSTEMS, FIRE PUMPS, EMERGENCY GENERATORS, COMPONENTS WITH HAZARDOUS, COMBUSTIBLE, OR HIGHLY TOXIC CONTENTS (Ip=1.5 PER ASCE 7-10 SECTION 13.1.3)	ASCE 7-10 SECTION 13.6 AND IBC 1705.13.2	REQUIRED (IBC 1705.12.4 & 1705.12.6)
ALL OTHER MECHANICAL AND ELECTRICAL COMPONENTS	ASCE 7-10 SECTION 13.6	NOT REQUIRED

STRUCTURAL OBSERVATION IN ACCORDANCE WITH IBC SECTION 1704.6 WILL BE PERFORMED BY THE STRUCTURAL ENGINEER OF RECORD DURING CONSTRUCTION AT SIGNIFICANT CONSTRUCTION STAGES AND AT COMPLETION OF THE STRUCTURAL SYSTEM. STRUCTURAL OBSERVATION CONSISTS OF VISUAL OBSERVATION FOR GENERAL CONFORMANCE TO THE CONSTRUCTION DOCUMENTS AND DOES NOT INCLUDE OR WAIVE THE RESPONSIBILITY FOR THE INSPECTIONS REQUIRED BY SECTIONS 110, 1704, OR OTHER SECTIONS OF THE IBC.

CONTRACTOR STATEMENT OF RESPONSIBILITY: CONTRACTOR SHALL SUBMIT A WRITTEN STATEMENT OF RESPONSIBILITY IN ACCORDANCE WITH IBC SECTION 1704.4 TO THE BUILDING OFFICIAL AND OWNER PRIOR TO CONSTRUCTION ACKNOWLEDGING THE SPECIAL REQUIREMENTS CONTAINED IN THE STATEMENT OF SPECIAL INSPECTIONS.

SHEET INDEX

S1.1	GENERAL STRUCTURAL NOTES
S1.2	GENERAL STRUCTURAL NOTES
S1.3	GENERAL STRUCTURAL NOTES
S2.1	FOUNDATION PLAN
S2.2	ROOF FRAMING PLAN
S2.3	EQUIPMENT ENCLOSURE & MECH'L SCREEN PLAN
S3.1	TYPICAL CONCRETE DETAILS
S3.2	CONCRETE DETAILS
S3.3	CONCRETE DETAILS
S3.4	BRACED FRAME FOUNDATION DETAILS

SHEET INDEX

S5.1	TYPICAL METAL DECK DETAILS
S5.2	TYPICAL STEEL DETAILS
S5.3	TYPICAL STEEL DETAILS
S5.4	STEEL DETAILS
S5.5	JOIST DETAILS
S5.6	ROOF FRAMING DETAILS
S5.7	CANOPY STEEL DETAILS
S5.8	MISC. STEEL DETAILS
S6.1	BRACED FRAME ELEVATIONS
S6.2	BRACED FRAME DETAILS
S6.3	BRACED FRAME DETAILS
S7.1	TYPICAL METAL STUD DETAILS

COUGHLIN PORTER LUNDEEN
801 SECOND AVENUE, SUITE 900
SEATTLE, WA 98104
(206) 343-0460 www.cplinc.com

MICHAEL A. ARMSTRONG — STATE OF WASHINGTON — 37839 — STRUCTURAL ENGINEER — PROFESSIONAL ENGINEER — 07/20/20

BID SET

No.	Description	Date:

Project Title:

Fire Station 24
City of Kirkland
Kirkland, Washington

Sheet Title:

GENERAL STRUCTURAL NOTES

Scale:
Project No. : S19-0211-03
Date : July 21, 2020

Sheet Number :

S1.1

C:\Revit Local\2019\KFS24_Structural_nickr9LRV7.rvt

Provided to Builders Exchange of WA, Inc. For usage Conditions Agreement see www.bxwa.com - Always Verify Scal

General Structural Notes

(THE FOLLOWING APPLY UNLESS SHOWN OTHERWISE ON THE DRAWINGS.)

GEOTECHNICAL:

14. FOUNDATION NOTES: SUBGRADE PREPARATION INCLUDING DRAINAGE, EXCAVATION, COMPACTION, AND FILLING REQUIREMENTS, SHALL CONFORM STRICTLY WITH THE CIVIL/STRUCTURAL DRAWINGS AND SPECIFICATIONS OR AS DIRECTED BY THE OWNER APPOINTED GEOTECHNICAL ENGINEER. SLABS-ON-GRADE SHALL BEAR ON A MINIMUM OF 1'-0" SUITABLE COMPACTED FILL. FOOTINGS SHALL BEAR ON AGGREGATE PIERS AT LEAST 18" BELOW LOWEST ADJACENT FINISHED GRADE. THE OWNER APPOINTED GEOTECHNICAL ENGINEER SHALL APPROVE FOOTING AND SLAB-ON-GRADE EXCAVATION/PREPARATION PRIOR TO PLACEMENT OF ALL FOOTINGS AND SLABS-ON-GRADE. BACKFILL BEHIND ALL RETAINING WALLS WITH FREE DRAINING, GRANULAR FILL AND PROVIDE FOR SUBSURFACE DRAINAGE AS NOTED IN THE CIVIL DRAWINGS AND SPECIFICATIONS.

AGGREGATE PIERS	SEE GENERAL STRUCTURAL NOTE 15
LATERAL EARTH PRESSURE (RESTRAINED/UNRESTRAINED)	55 PCF/35 PCF
SOIL PROFILE TYPE	SITE CLASS C

GEOTECHNICAL REPORT REFERENCE: "HWA GEOSCIENCES INC., GEOTECHNICAL REPORT FIRE STATION 24 REPLACEMENT, PROJECT NO. 2018-057-21, DATED JUNE 8TH, 2020"

15. AGGREGATE PIERS SHALL BE INSTALLED BENEATH STRUCTURAL FOOTINGS AS REQUIRED TO STRENGTHEN UNDERLYING FILL SOILS. AGGREGATE PIERS SHALL BE CONSTRUCTED BY COMPACTION OR VIBRATION OF AGGREGATE USING DENSIFICATION EQUIPMENT. COMPRESSED AIR SHALL NOT BE USED TO ADVANCE AGGREGATE PIER INSTALLATION TOOLS OR TO REMOVE CUTTINGS DURING AGGREGATE PIER INSTALLATION. AGGREGATE PIERS ARE NOT REQUIRED AT SLABS-ON-GRADE. SEE SPECIFICATIONS FOR ADDITIONAL REQUIREMENTS.

DESIGN REQUIREMENTS FOR AGGREGATE PIERS:

UNDER STRUCTURAL FOOTING:
AGGREGATE PIERS SHALL BE DESIGNED SUCH THAT THE SOILS BENEATH STRUCTURAL FOOTINGS REACH AN ALLOWABLE BEARING CAPACITY OF 5,000 PSF, UNLESS OTHERWISE NOTED.

AGGREGATE PIERS UNDER CONTINUOUS STEM WALL FOOTINGS:
AGGREGATE PIERS SHALL BE SPACED AT 8'-0" ON CENTER MAXIMUM BELOW STEM WALL FOOTINGS AND HAVE A MINIMUM AXIAL CAPACITY OF 12 KIPS

AGGREGATE PIERS SHALL BE A DEFERRED SUBMITTAL PER GENERAL STRUCTURAL NOTE 12.

SEE SPECIFICATIONS FOR ADDITIONAL AGGREGATE PIER REQUIREMENTS.

FLOOR AND ROOF DECK OPENINGS:

16. MISCELLANEOUS OPENING ALLOWANCE: THE CONTRACTOR SHALL REINFORCE ALL OPENINGS AT ROOF DECK OR COMPOSITE DECK PER THE DRAWINGS. OPENINGS ARE NOT ALL SHOWN ON THE STRUCTURAL DRAWINGS. SEE ARCHITECTURAL, MECHANICAL, AND ELECTRICAL DRAWINGS FOR ADDITIONAL OPENINGS NOT SHOWN ON THE STRUCTURAL DRAWINGS. THE CONTRACTOR SHALL REVIEW THE ARCHITECTURAL, MECHANICAL, AND ELECTRICAL DRAWINGS FOR OPENINGS NOT SHOWN ON THE STRUCTURAL DRAWINGS AND SUPPLY OPENING SIZE, LOCATION, AND CONFIGURATION TO THE STEEL FABRICATOR PRIOR TO SHOP DRAWING SUBMITTAL. OPENINGS SHALL OCCUR WHERE ANY DUCT, CONDUIT, PLUMBING, OR OTHER IMPLEMENT PASSES THROUGH THE FLOOR OR ROOF.

AS AN ALLOWANCE THE CONTRACTOR, FABRICATOR, AND ERECTOR SHALL BUDGET TO PROVIDE AND INSTALL AN ADDITIONAL 65 LINEAR FEET OF ANGLE 5x3x1/4 AND 40 LINEAR FEET OF ANGLE 4x3x1/4 FOR FRAMING OF ROOF DECK OPENINGS THAT ARE NOT SHOWN ON THE DRAWINGS. INSTALL PER 13/S5.1, ASSUMING (6) LOCATIONS FOR ERECTION.

AS AN ALLOWANCE THE CONTRACTOR, FABRICATOR, AND ERECTOR SHALL BUDGET TO PROVIDE AND INSTALL AN ADDITIONAL 60 LINEAR FEET OF #4 REBAR, 30 LINEAR FEET OF ANGLE 1-3/4x1-3/4x1/4, 40 LINEAR FEET OF C8x11.5, AND 20 LINEAR FEET OF C6x8.2 FOR FRAMING OF COMPOSITE DECK OPENINGS THAT ARE NOT SHOWN ON THE DRAWINGS. INSTALL PER 8/S5.1, ASSUMING (4) ANGLE FRAMED LOCATIONS AND (2) CHANNEL FRAMED LOCATIONS FOR ERECTION.

ANCHORAGE:

17. EXPANSION BOLTS INTO CONCRETE SHALL BE ONE OF THE FOLLOWING INSTALLED IN STRICT ACCORDANCE WITH THE ICC-ES REPORTS INDICATED AND MANUFACTURER'S INSTRUCTIONS: "KWIK BOLT TZ" AS MANUFACTURED BY HILTI, INC. (ICC-ES NO. 1917); OR "STRONG-BOLT 2" AS MANUFACTURED BY SIMPSON STRONG-TIE COMPANY, INC. (ICC-ES NO. 3037); OR "POWER-STUD+ SD2" AS MANUFACTURED BY DEWALT (ICC-ES NO. 2502). SUBSTITUTES PROPOSED BY CONTRACTOR SHALL BE SUBMITTED FOR REVIEW WITH ICC-ES REPORTS INDICATING EQUIVALENT OR GREATER LOAD CAPACITIES. IN ADDITION, SUBSTITUTIONS SHALL MEET ICC-ES ACCEPTANCE CRITERIA AC193. SPECIAL INSPECTION IS REQUIRED FOR ALL EXPANSION BOLT INSTALLATION. EXPANSION BOLTS SHALL NOT BE USED AS SUBSTITUTES FOR EMBEDDED ANCHOR BOLTS UNLESS SPECIFICALLY APPROVED BY THE STRUCTURAL ENGINEER. NOTIFY ENGINEER IF BOLT LOCATIONS CONFLICT WITH REINFORCING STEEL – DO NOT CUT REINFORCING OR REDUCE EMBEDMENT DEPTHS WITHOUT PRIOR APPROVAL.

UNLESS OTHERWISE NOTED, PROVIDE THE FOLLOWING NOMINAL EMBEDMENT DEPTHS FOR EXPANSION BOLTS INTO CONCRETE:

HILTI KWIK BOLT TZ:
1/2"Ø EXPANSION BOLTS . . . . . 3 5/8"
5/8"Ø EXPANSION BOLTS . . . . . 4 7/16"
3/4"Ø EXPANSION BOLTS . . . . . 5 5/16"

SIMPSON STRONG-BOLT 2:
1/2"Ø EXPANSION BOLTS . . . . . 3 7/8"
5/8"Ø EXPANSION BOLTS . . . . . 5 1/8"
3/4"Ø EXPANSION BOLTS . . . . . 5 3/4"

DEWALT/POWERS POWER-STUD+SD2:
1/2"Ø EXPANSION BOLTS . . . . . 3 3/4"
5/8"Ø EXPANSION BOLTS . . . . . 4 7/8"
3/4"Ø EXPANSION BOLTS . . . . . 5 3/4"

18. DRIVE PINS AND OTHER POWDER-ACTUATED FASTENERS SHALL BE ONE OF THE FOLLOWING INSTALLED IN STRICT ACCORDANCE WITH THE ICC-ES REPORTS INDICATED AND MANUFACTURER'S INSTRUCTIONS INCLUDING MINIMUM EMBED REQUIREMENTS: "TE SERIES" (0.157" DIAMETER) AS MANUFACTURED BY ITW RAMSET (ICC-ES NO. 1799); OR "X-U" (0.157" DIAMETER) AS MANUFACTURED BY HILTI, INC. (ICC-ES NO. 2269); OR "STRONG-TIE PDPA" (0.157" DIAMETER) AS MANUFACTURED BY SIMPSON STRONG-TIE COMPANY, INC. (ICC-ES NO. 2138); OR "CSI PIN" (0.157" DIAMETER) AS MANUFACTURED BY DEWALT (ICC-ES NO. 2024); OR AN APPROVED EQUIVALENT IN STRENGTH AND EMBEDMENT. MINIMUM EMBEDMENT IN CONCRETE SHALL BE 1" UNLESS OTHERWISE NOTED. MAINTAIN AT LEAST 3-1/2" TO NEAREST CONCRETE EDGE.

19. NOT USED.

20. EPOXY-GROUTED RODS OR REBAR TO CONCRETE SPECIFIED ON THE DRAWINGS SHALL BE ONE OF THE FOLLOWING INSTALLED IN STRICT ACCORDANCE WITH THE ICC-ES REPORTS INDICATED AND MANUFACTURER'S INSTRUCTIONS INCLUDING MINIMUM EMBED REQUIREMENTS: "SET-XP" AS MANUFACTURED BY SIMPSON STRONG-TIE COMPANY, INC. (ICC-ES NO. 2508); OR "HIT-HY 200" AS MANUFACTURED BY HILTI, INC. (ICC-ES NO. 3187), "SAFE-SET" INSTALLATION WITH HOLLOW CARBIDE DRILL BIT IS PERMITTED; OR "PURE110+" AS MANUFACTURED BY DEWALT (ICC-ES NO. 3298), OR "AC200+" AS MANUFACTURED BY DEWALT (ICC-ES NO. 4027). SUBSTITUTES PROPOSED BY CONTRACTOR SHALL BE SUBMITTED FOR REVIEW WITH ICC-ES REPORTS INDICATING EQUIVALENT OR GREATER LOAD CAPACITIES. IN ADDITION, SUBSTITUTIONS SHALL MEET ICC-ES ACCEPTANCE CRITERIA AC308. SPECIAL INSPECTION OF EPOXY-GROUTED ANCHOR INSTALLATION IS REQUIRED. NOTIFY ENGINEER IF ANCHOR LOCATIONS CONFLICT WITH REINFORCING STEEL – DO NOT CUT REINFORCING OR REDUCE EMBEDMENT DEPTHS WITHOUT PRIOR APPROVAL. INSTALLATION OF ADHESIVE ANCHORS HORIZONTALLY OR UPWARDLY INCLINED TO SUPPORT SUSTAINED TENSION LOADS SHALL BE PERFORMED BY CERTIFIED PERSONNEL IN CONFORMANCE TO ACI 318-14 SECTION 17.8.2.2. HOLES SHALL BE HAMMER DRILLED AND DRY.

EPOXY GROUTED RODS OR REBAR SHALL NOT BE USED AS SUBSTITUTES FOR CAST-IN-PLACE ANCHOR BOLTS, THREADED RODS, OR REINFORCING STEEL UNLESS SPECIFICALLY APPROVED BY THE STRUCTURAL ENGINEER. FIELD FIXES OR OTHER CONDITIONS NOT ADDRESSED IN THE DOCUMENTS MUST BE SPECIFICALLY APPROVED BY THE STRUCTURAL ENGINEER, INCLUDING EMBEDMENT DEPTHS.

UNLESS OTHERWISE NOTED, PROVIDE THE FOLLOWING EMBEDMENT DEPTHS FOR ANCHORS AT CONCRETE:

1/2"Ø ROD OR #4 BAR . . . . . 5"
5/8"Ø ROD OR #5 BAR . . . . . 7"
3/4"Ø ROD OR #6 BAR . . . . . 9"

21. CONCRETE SCREW ANCHORS SHALL BE ONE OF THE FOLLOWING INSTALLED IN STRICT ACCORDANCE WITH THE ICC-ES REPORTS INDICATED AND MANUFACTURER'S INSTRUCTIONS INCLUDING MINIMUM EMBED REQUIREMENTS: "TITEN HD" AS MANUFACTURED BY SIMPSON STRONG-TIE COMPANY (ICC-ES NO. 2713); OR "KWIK HUS-EZ" AS MANUFACTURED BY HILTI, INC. (ICC-ES NO. 3027); OR "SCREW-BOLT+" AS MANUFACTURED BY DEWALT (ICC-ES NO. 3889). SUBSTITUTES PROPOSED BY CONTRACTOR SHALL BE SUBMITTED FOR REVIEW WITH ICC-ES REPORTS INDICATING EQUIVALENT OR GREATER LOAD CAPACITIES. IN ADDITION, SUBSTITUTIONS SHALL MEET ICC-ES ACCEPTANCE CRITERIA AC193. SPECIAL INSPECTION IS REQUIRED FOR ALL CONCRETE SCREW ANCHOR INSTALLATION. CONCRETE SCREW ANCHORS SHALL NOT BE USED AS SUBSTITUTES FOR EMBEDDED ANCHOR BOLTS OR EXPANSION BOLTS UNLESS SPECIFICALLY APPROVED BY THE STRUCTURAL ENGINEER. NOTIFY ENGINEER IF SCREW ANCHOR LOCATIONS CONFLICT WITH REINFORCING STEEL – DO NOT CUT REINFORCING OR REDUCE EMBEDMENT DEPTHS WITHOUT PRIOR APPROVAL.

CONCRETE:

22. CONCRETE SHALL BE MIXED, PROPORTIONED, CONVEYED AND PLACED IN ACCORDANCE WITH ACI 318-14 CHAPTER 26 AND ACI 301. STRENGTHS AT 28 DAYS AND MIX CRITERIA SHALL BE AS FOLLOWS:

TYPE OF CONSTRUCTION	MIN. 28 DAY STRENGTH (U.O.N.) (f'c)	EXPOSURE CLASSES (ACI 318-14 TABLES 19.3.1.1 AND 19.3.2.1)
A. CONCRETE EXPOSED TO WEATHER	4,500 PSI	(F1, S0, W0, C1)
B. CONCRETE EXPOSED TO EARTH (FOUNDATIONS, BASEMENT WALLS, ETC.)	4,000 PSI	(F0, S0, W0, C1)
C. ALL OTHER CONCRETE (UNLESS LISTED BELOW)	4,000 PSI *	(F0, S0, W0, C0)

* WATER-CEMENTITIOUS MATERIAL RATIO FOR INTERIOR SLABS SHALL BE BETWEEN 0.40 AND 0.44.

SEE SPECIFICATIONS FOR SHRINKAGE REDUCING CONCRETE MIX CRITERIA WHERE INDICATED ON DRAWINGS.

CONCRETE MIXES SHALL MEET OR EXCEED THE REQUIREMENTS SPECIFIED ABOVE. MIXES SHALL BE SUBMITTED TO THE ENGINEER AND BUILDING OFFICIAL FOR APPROVAL TWO WEEKS PRIOR TO PLACING ANY CONCRETE AND SHALL INCLUDE THE AMOUNTS OF CEMENT, CEMENTITOUS MATERIAL, FINE AND COARSE AGGREGATE, WATER AND ADMIXTURES, AS WELL AS THE WATER-CEMENT RATIO, SLUMP, CONCRETE YIELD AND SUBSTANTIATING STRENGTH DATA IN ACCORDANCE WITH ACI 318-14, CHAPTER 26 AND 27. REVIEW OF MIX SUBMITTALS BY THE ENGINEER OF RECORD INDICATES ONLY THAT INFORMATION PRESENTED CONFORMS GENERALLY WITH CONTRACT DOCUMENTS. CONTRACTOR OR SUPPLIER MAINTAINS FULL RESPONSIBILITY FOR SPECIFIED PERFORMANCE.

23. REINFORCING STEEL SHALL CONFORM TO ASTM A615, GRADE 60, fy = 60,000 PSI. GRADE 60 REINFORCING BARS WHICH ARE TO BE WELDED SHALL CONFORM TO ASTM A706. REINFORCEMENT COMPLYING WITH ASTM A615(S1) MAY BE WELDED ONLY IF MATERIAL PROPERTY REPORTS INDICATING CONFORMANCE WITH WELDING PROCEDURES SPECIFIED IN A.W.S. D1.4 ARE SUBMITTED.

WELDED WIRE FABRIC SHALL CONFORM TO ASTM A1064.

24. REINFORCING STEEL SHALL BE DETAILED (INCLUDING HOOKS AND BENDS) IN ACCORDANCE WITH ACI 315-99 AND 318-14. LAP ALL CONTINUOUS REINFORCEMENT IN ACCORDANCE WITH "REINFORCEMENT SPLICE AND DEVELOPMENT LENGTH SCHEDULE" OF . PROVIDE CORNER BARS AT ALL WALL AND FOOTING INTERSECTIONS. LAP ADJACENT MATS OF WELDED WIRE FABRIC A MINIMUM OF 12" AT SIDES AND ENDS.

NO BARS PARTIALLY EMBEDDED IN HARDENED CONCRETE SHALL BE FIELD BENT UNLESS OTHERWISE NOTED ON THE DRAWINGS OR APPROVED BY THE STRUCTURAL ENGINEER.

25. CONCRETE PROTECTION (COVER) FOR REINFORCING STEEL SHALL BE AS FOLLOWS:

FOOTINGS AND OTHER UNFORMED SURFACES CAST AGAINST AND PERMANENTLY EXPOSED TO EARTH	3"
FORMED SURFACES EXPOSED TO EARTH (i.e. WALLS BELOW GROUND) OR WEATHER (#6 BARS OR LARGER)	2"
(#5 BARS OR SMALLER)	1 1/2"
SLAB-ON-GRADE BOTTOM REINFORCING (WITH VAPOR BARRIER BELOW)	1 1/2"
COLUMN TIES	1 1/2"
SLABS AND WALLS (INTERIOR FACE) (#11 BARS OR SMALLER)	1"

26. CAST-IN-PLACE CONCRETE: SEE ARCHITECTURAL DRAWINGS FOR EXACT LOCATIONS AND DIMENSIONS OF DOOR AND WINDOW OPENINGS IN ALL CONCRETE WALLS. SEE MECHANICAL DRAWINGS FOR SIZE AND LOCATION OF MISCELLANEOUS MECHANICAL OPENINGS THROUGH CONCRETE WALLS. SEE ARCHITECTURAL DRAWINGS FOR ALL GROOVES, NOTCHES, CHAMFERS, FEATURE STRIPS, COLOR, TEXTURE, AND OTHER FINISH DETAILS AT ALL EXPOSED CONCRETE SURFACES.

27. SLABS ON METAL DECK: AT SLABS ON METAL DECK, ACCOUNT FOR DEFLECTION OF METAL DECK DURING PLACEMENT OF WET CONCRETE SUCH THAT TOP OF SLAB ELEVATION IS SCREEDED OFF LEVEL BETWEEN ADJACENT DECK SUPPORTS. REFER TO DECK MANUFACTERER'S LITERATURE FOR APPROXIMATE DECK DEFLECTION VALUES. NOTIFY STRUCTURAL ENGINEER IF DECK DEFLECTION EXCEEDS 3/4". AT CAMBERED SUPPORTS, SET SCREED PINS ALONG EACH SUPPORT TO A UNIFORM HEIGHT BASED ON THE SPECIFIED SLAB THICKNESS.

28. BONDING AGENT SHALL BE "MASTEREMACO ADH 326" BY BASF CORPORATION. OR EQUIVALENT, AND SHALL BE USED WHERE NEW CONCRETE IS PLACED AGAINST HARDENED CONCRETE. PLACE IN STRICT ACCORDANCE WITH MANUFACTURER'S INSTRUCTIONS, INCLUDING PREPARATION OF EXISTING SURFACES. CONCRETE SHALL BE CONSIDERED HARDENED AFTER 56 DAYS.

29. NON-SHRINK GROUT SHALL BE FURNISHED BY AN APPROVED MANUFACTURER AND SHALL BE MIXED AND PLACED IN STRICT ACCORDANCE WITH THE MANUFACTURER'S INSTRUCTIONS. GROUT STRENGTH SHALL BE AT LEAST EQUAL TO THE MATERIAL ON WHICH IT IS PLACED (6,000 PSI MINIMUM).

30. NOT USED.

MASONRY:

31. CONCRETE MASONRY UNIT WALLS SHALL BE CONSTRUCTED OF MEDIUM OR NORMAL WEIGHT MASONRY UNITS, CONFORMING TO ASTM C90, LAID IN A RUNNING BOND WITH A MINIMUM NET AREA COMPRESSIVE STRENGTH OF 1,900 PSI. MORTAR SHALL BE TYPE "S" IN CONFORMANCE WITH ASTM C270 AND ARTICLE 2.6A OF TMS602-13/ACI530.1-13/ASCE6-13. GROUT SHALL CONFORM TO ARTICLE 2.2 OF TMS602/ACI530.1/ASCE6 AND ASTM C1019 REQUIREMENTS AND ATTAIN A MINIMUM COMPRESSIVE STRENGTH OF 2,000 PSI AT 28 DAYS, DESIGN F'm = 1,500 PSI AT 28 DAYS. STRENGTH SHALL BE VERIFIED BY PRISM TESTING OR SHALL BE VERIFIED BY THE UNIT STRENGTH METHOD IN ACCORDANCE WITH IBC SECTION 1705.4 AND ARTICLE 1.4B OF TMS602/ACI530.1/ASCE6 PRIOR TO CONSTRUCTION. ADDITIONAL UNIT STRENGTH OR PRISM TESTING IN ACCORDANCE WITH ASTM C1314 SHALL BE COMPLETED FOR EACH 5,000 SQUARE FEET OF WALL DURING CONSTRUCTION.

UNLESS OTHERWISE NOTED, PROVIDE THE FOLLOWING REINFORCEMENT:

8" WALLS #5 @ 32"oc. VERT. (2)#5 @ 48"oc. HORIZ.

IN ADDITION, PROVIDE (1)#5 VERT. FULL HEIGHT AT EACH SIDE OF OPENINGS, AT WALL CORNERS AND INTERSECTIONS, AT FREE ENDS OF WALLS, AND (2)#5 HORIZONTAL AT ELEVATED FLOOR AND ROOF LEVELS, AT TOPS OF WALLS, AND ABOVE AND BELOW ALL OPENINGS. ALL HORIZONTAL REINFORCEMENT SHALL BE PLACED IN BOND BEAMS. EXTEND HORIZONTAL REINFORCEMENT 2'-0" BEYOND OPENINGS. IF 2'-0" UNAVAILABLE EXTEND REINFORCEMENT AS FAR AS POSSIBLE AND HOOK. PROVIDE CORNER BARS TO LAP HORIZONTAL REINFORCEMENT AT CORNERS AND INTERSECTIONS. LAP SPLICES SHALL BE 25" FOR NO. 4 BARS, 40" FOR NO. 5 BARS, AND 72 BAR DIAMETERS FOR NO. 6 AND LARGER BARS.

FILL ALL CELLS CONTAINING REINFORCEMENT OR EMBEDDED ITEMS AND ALL CELLS IN CONTACT WITH EARTH WITH GROUT. PROVIDE CLEANOUT HOLES AT BOTTOM OF ALL CELLS CONTAINING REINFORCEMENT FOR POURS GREATER THAN 5.33 FEET IN HEIGHT (MAXIMUM SPACING OF CLEANOUTS SHALL BE 32"oc FOR SOLIDLY GROUTED WALLS). MAXIMUM HEIGHT OF GROUT POURS SHALL BE IN ACCORDANCE WITH TMS602/ACI530.1/ASCE6 TABLE 7. MAXIMUM HEIGHT OF GROUT LIFTS IS 5.33 FEET, EXCEPT AS PERMITTED PER ARTICLE 3.5D OF TMS602/ACI530.1/ASCE6.

COUGHLIN PORTER LUNDEEN
801 SECOND AVENUE, SUITE 900
SEATTLE, WA 98104
(206) 343-0460 www.cplinc.com

MICHAEL A ARMSTRONG STATE OF WASHINGTON 37839 REGISTERED PROFESSIONAL ENGINEER
01/20/20

BID SET

No.	Description	Date:

Project Title:

Fire Station 24
City of Kirkland
Kirkland, Washington

Sheet Title:

GENERAL STRUCTURAL NOTES

Scale:
Project No. : S19-0211-03
Date : 12/02/19

Sheet Number :

S1.2

C:\Revit Local\2019\KFS24_Structural_nickr9LRV7.rvt

Provided to Builders Exchange of WA, Inc. For usage Conditions Agreement see www.bxwa.com - Always Verify Scal

General Structural Notes

(THE FOLLOWING APPLY UNLESS SHOWN OTHERWISE ON THE DRAWINGS.)

STEEL:

32. STRUCTURAL STEEL DESIGN, FABRICATION, AND ERECTION SHALL BE BASED ON THE LATEST EDITIONS OF THE A.I.S.C. SPECIFICATIONS AND CODES:

    1. SPECIFICATION FOR STRUCTURAL STEEL BUILDINGS-ALLOWABLE STRESS AND PLASTIC DESIGN, OR LOAD AND RESISTANCE FACTOR DESIGN SPECIFICATION FOR STRUCTURAL STEEL BUILDINGS.

    2. CODE OF STANDARD PRACTICE FOR STEEL BUILDINGS AND BRIDGES, ADOPTED APRIL 14, 2010.

       IN REFERENCE TO SECTIONS 3.1.2 AND 4.4.1, THE CONTRACT DOCUMENTS (DESIGN DRAWINGS) SHOW COMPLETE CONNECTION DETAILS FOR ALL MEMBERS EXCEPT THOSE NOTED TO BE DESIGN-BUILD ITEMS. ALTERNATE CONNECTION DETAILS REQUESTED BY THE FABRICATOR SHALL BE SUBMITTED TO THE ENGINEER OF RECORD FOR APPROVAL VIA A REQUEST FOR INFORMATION (RFI) PRIOR TO COMPLETION OF SHOP DRAWINGS.

       IN REFERENCE TO SECTION 3.1.6, FABRICATOR SHALL ALSO REVIEW PROJECT SPECIFICATIONS AND ARCHITECTURAL DRAWINGS TO DETERMINE PAINTING AND GALVANIZING REQUIREMENTS. MEMBERS EMBEDDED IN CONCRETE, MASONRY OR TO RECEIVE SPRAY-ON FIREPROOFING SHALL NOT BE PAINTED. DO NOT PAINT OR GALVANIZE AREAS OF PIECES TO BE FIELD WELDED, OR REMOVE PAINT AND GALVANIZING IN FIELD PRIOR TO WELDING.

       IN REFERENCE TO SECTION 3.3, IN THE EVENT OF DISCREPANCIES BETWEEN DESIGN DRAWINGS AND SPECIFICATIONS, THE DESIGN DRAWINGS GOVERN.

       IN REFERENCE TO SECTION 4.1, THE FABRICATOR SHALL NOT ASSUME BID PACKAGES CONSTITUTE RELEASING THE DRAWINGS FOR CONSTRUCTION WITHOUT EXPLICIT DIRECTION TO DO SO BY THE OWNER.

    3. SPECIFICATION FOR STRUCTURAL JOINTS USING ASTM A325 OR A490 BOLTS.

    4. QUALITY CONTROL SHALL BE IN ACCORDANCE WITH AISC 360 CHAPTER N (AISC 341 CHAPTER J FOR STEEL SEISMIC SYSTEM).

    CONTRACTOR SHALL ALSO COMPLY WITH OSHA REGULATION 29 CFR PART 1926 SUBPART R - STEEL ERECTION, PUBLISHED JANUARY 18, 2001. MISCELLANEOUS PLATES FOR GUYING CABLE ATTACHMENTS, TEMPORARY JOIST BRACING, ETC. SHALL BE ADDED AS REQUIRED. CONTRACTOR SHALL EVALUATE COLUMNS AND PROVIDE ADEQUATE BASE PLATE SHIMS, ADDITIONAL TEMPORARY ERECTION BOLTS/CLIPS, GUYS, OR TEMPORARY BRACING AS REQUIRED PER SECTION 1926.755.

33. STRUCTURAL STEEL SHALL CONFORM TO THE FOLLOWING REQUIREMENTS:

TYPE OF MEMBER	ASTM SPECIFICATION	Fy
A. WIDE FLANGE AND WT SHAPES	A992	50 KSI
B. PLATES, ANGLES, CHANNELS, AND RODS	A36	36 KSI
C. PLATES (NOTED GRADE 50 ON DRAWINGS)	A572	50 KSI
D. PIPE MEMBERS	A53 (TYPE E OR S, GRADE B)	35 KSI
E. STRUCTURAL TUBING (HSS - SQUARE OR RECTANGULAR)	A500 (GRADE B)	46 KSI
F. ANCHOR BOLTS OR ANCHOR RODS	F1554 (GRADE 36)	36 KSI
G. CONNECTION BOLTS	A325-N	
H. THREADED RODS FOR EPOXY GROUTED CONNECTIONS	A36 OR F1554	36 KSI

34. DIMENSIONAL TOLERANCE FOR STRUCTURAL STEEL MEMBERS SHALL BE PER THE AISC CODE OF STANDARD PRACTICE FOR STEEL BUILDINGS AND BRIDGES, SECTION 6.4 AND ASTM SPECIFICATION A6. UNLESS SPECIFICALLY ALLOWED BY THE ENGINEER, COLUMN MEMBERS SHALL NOT BE MODIFIED BY THE ROTARY STRAIGHTENING PROCESS.

35. ARCHITECTURALLY EXPOSED STRUCTURAL STEEL SHALL CONFORM TO SECTION 10 OF THE A.I.S.C. CODE OF STANDARD PRACTICE FOR STEEL BUILDINGS AND BRIDGES, ADOPTED APRIL 14, 2010. ANY STEEL THAT IS TO BE EXPOSED TO VIEW UPON COMPLETION OF THE PROJECT SHALL BE CONSIDERED ARCHITECTURALLY EXPOSED. SEE SPECIFICATIONS FOR SPECIFIC FABRICATION AND ERECTION REQUIREMENTS FOR ARCHITECTURALLY EXPOSED STRUCTURAL STEEL.

36. BOLTS IN CONNECTIONS NOT SPECIFIED AS SLIP-CRITICAL NEED ONLY BE TIGHTENED TO THE SNUG TIGHT CONDITION. THE SNUG TIGHT CONDITION IS DEFINED AS THE TIGHTNESS THAT EXISTS WHEN ALL PLIES IN A JOINT ARE IN FIRM CONTACT. IF A SLOTTED HOLE OCCURS IN AN OUTER PLY, A FLAT HARDENED WASHER OR COMMON PLATE WASHER SHALL BE INSTALLED OVER THE SLOT.

    ALL SLIP-CRITICAL CONNECTION BOLTS SHALL BE APPROVED SELF LOAD INDICATING TYPES (SUCH AS BETHLEHEM INDICATOR BOLTS, LeJEUNE TENSION CONTROL BOLTS, ETC.), AND SHALL BE INSTALLED IN STRICT ACCORDANCE WITH THE MANUFACTURER'S INSTRUCTIONS. CONNECTED PLIES SHALL BE PREPARED TO MEET THE REQUIREMENTS FOR CLASS A FAYING SURFACES.

37. HOLE SIZES IN STEEL MEMBERS FOR CONNECTIONS TO CONCRETE OR MASONRY SHALL BE AS FOLLOWS UNLESS SPECIFIED OTHERWISE ON THE DRAWINGS:

	MAXIMUM HOLE DIA. OVER NOMINAL BOLT DIA.	
ANCHOR TYPE	OTHER THAN COL. BASE PLATES	COL. BASE PLATES
CAST-IN-PLACE ANCHOR BOLTS	1/16" *	TABLE 14-2 OF AISC STEEL CONSTR. MANUAL, 14TH ED.
EXPANSION BOLTS	1/16" *	5/16"
EPOXY GROUTED BOLTS	1/8" *	5/16"

    * USE OF LARGER HOLES WOULD REQUIRE THE USE OF WELDED PLATE WASHERS AND WOULD REQUIRE PRIOR APPROVAL BY THE STRUCTURAL ENGINEER.

    HARDENED OR COMMON PLATE WASHERS ARE REQUIRED BELOW ALL NUTS WHERE OVERSIZED HOLES ARE USED AND SHALL BE SIZED TO COVER ENTIRE HOLE. MINIMUM WASHER SIZES FOR COLUMN BASE PLATES SHALL BE IN ACCORDANCE WITH TABLE 14-2 OF THE AISC STEEL CONSTRUCTION MANUAL, 14TH EDITION.

38. OPEN WEB STEEL JOISTS AND JOIST GIRDERS (INCLUDING BRIDGING) SHALL CONFORM TO THE SPECIFICATIONS OF THE STEEL JOIST INSTITUTE, LATEST EDITION, AND IBC SECTION 2207. SEE PLANS AND DETAILS FOR LOADING REQUIREMENTS. AT JOISTS, THE PLANS INDICATE THE UNIFORM POUND PER FOOT LINE LOADS SHOWN AS (TOTAL LOAD, LIVE LOAD) WHICH INCLUDE AN ALLOWANCE FOR THE WEIGHT OF JOISTS, UNLESS OTHERWISE NOTED. CONCENTRATED LOADS SPECIFIED ON THE PLANS OR DETAILS SHALL BE ADDITIVE TO THE SPECIFIED LINE LOADS. JOIST GIRDER LOADS INDICATED DO NOT INCLUDE AN ALLOWANCE FOR THE GIRDER SELF WEIGHT. FOR MEMBERS DENOTED 'STRUT' DESIGN TOP CHORD TO RESIST THE FACTORED EARTHQUAKE LOAD SHOWN. IN ADDITION, ALL MEMBERS SHALL BE DESIGNED TO SUPPORT A SINGLE 500 LB. ADDITIVE DOWNWARD POINT LOAD FROM ANY TOP OR BOTTOM CHORD PANEL POINT TO ACCOUNT FOR MISCELLANEOUS ARCHITECTURAL AND MECHANICAL ITEMS. CONTRACTOR SHALL COORDINATE WITH MECHANICAL CONTRACTOR AND JOIST MANUFACTURER FOR LOADS EXCEEDING THIS ALLOWANCE. WHERE CONCENTRATED LOADS/HANGERS DO NOT OCCUR AT PANEL POINTS, CONTRACTOR SHALL INSTALL ADDITIONAL WEB MEMBERS PER THE INSTALLATION DETAILS OF THE JOIST MANUFACTURER WHERE REQUIRED. REVIEW PROPOSED FIELD SPLICE LOCATIONS AND DETAILS WITH ARCHITECT, AND COORDINATE LOCATIONS WITH THE ERECTOR.

    JOIST MANUFACTURER SHALL CHECK ROOF MEMBERS AND PROVIDE UPLIFT BRIDGING AS REQUIRED TO ADEQUATELY BRACE THE BOTTOM CHORD AGAINST LATERAL MOVEMENT UNDER A NET WIND UPLIFT PRESSURE (ASD) OF 40 PSF AT INTERIOR LOCATIONS, 48 PSF AT OPEN STRUCTURES & OVERHANGS. CONTRACTOR SHALL COORDINATE BRIDGING LAYOUT PRIOR TO JOIST ERECTION TO AVOID CONFLICTS WITH MECHANICAL DUCTWORK, FLOOR/ROOF OPENINGS (INCLUDING SKYLIGHTS), OR OTHER MISCELLANEOUS ITEMS. ENDS OF BRIDGING ROWS SHALL BE FIELD WELDED TO STRUCTURAL STEEL MEMBERS OR TO PLATES BOLTED TO CONCRETE OR MASONRY WALLS UNLESS OTHERWISE NOTED.

    CAMBER JOISTS IN ACCORDANCE WITH THE STEEL JOIST INSTITUTE STANDARDS, UNLESS OTHERWISE NOTED. SIZE MEMBERS TO MEET THE FOLLOWING LIVE LOAD DEFLECTION CRITERIA UNLESS OTHERWISE NOTED: L/360 FOR SIMPLE SPAN ROOF MEMBERS AND L/180 FOR ROOF OVERHANGS.

    JOISTS THAT OCCUR WITHIN 3'-0" OF STEEL COLUMNS AND ALL JOISTS EXCEEDING 40'-0" IN LENGTH SHALL BE BOLTED TO WIDE FLANGE OR JOIST GIRDER SUPPORTS IN LIEU OF THE SPECIFIED FIELD WELDING, EXCEPT AT JOISTS MARKED 'STRUT' AND WHERE NOTED ON DETAILS WHERE THE FIELD WELDING SHALL ALSO APPLY. USE (2) 1/2" DIAMETER A307 BOLTS FOR K-SERIES JOISTS AND (2) 3/4" DIAMETER A307 BOLTS FOR LH AND DLH-SERIES JOISTS (VERIFY BOLT SIZE/SPACING WITH JOIST SUPPLIER). BOLTING REQUIREMENT MAY BE OMITTED FOR JOISTS LESS THAN 40'-0" IN LENGTH WHERE WIDE FLANGE BEAMS FRAME INTO STEEL COLUMNS IN AT LEAST TWO DIRECTIONS.

    SUBMIT SHOP DRAWINGS AND DESIGN CALCULATIONS TO THE ARCHITECT, STRUCTURAL ENGINEER, AND BUILDING DEPARTMENT FOR REVIEW PRIOR TO FABRICATION. SUBMITTALS SHALL INDICATE ALL CHORD AND WEB MEMBER SIZES AND SHOW ALL END CONNECTIONS. DESIGN CALCULATIONS SHALL BEAR THE STAMP AND SIGNATURE OF A REGISTERED PROFESSIONAL ENGINEER, STATE OF WASHINGTON.

39. ALL WELDING SHALL BE IN CONFORMANCE WITH A.I.S.C. AND A.W.S. STANDARDS AND SHALL BE PERFORMED BY W.A.B.O. CERTIFIED WELDERS USING E70XX ELECTRODES. ONLY PREQUALIFIED WELDS (AS DEFINED BY A.W.S.) SHALL BE USED. DO NOT PAINT OR GALVANIZE AREAS OF PIECES TO BE FIELD WELDED, OR REMOVE PAINT AND GALVANIZING IN FIELD PRIOR TO WELDING. WELDING OF GRADE 60 REINFORCING BARS (IF REQUIRED) SHALL BE PERFORMED USING LOW HYDROGEN ELECTRODES. WELDING WITHIN 4" OF COLD BENDS IN REINFORCING STEEL IS NOT PERMITTED. SEE REINFORCEMENT NOTE FOR MATERIAL REQUIREMENTS OF WELDED BARS.

    THE WELD SYMBOLS SHOWN ON THE DRAWINGS ARE INTENDED ONLY TO AID THE CONTRACTOR IN THE DETERMINATION OF FIELD VERSUS SHOP WELDING. THE CONTRACTOR SHALL WORK WITH THE FABRICATOR AND ERECTOR TO COORDINATE THE FINAL DETERMINATION OF FIELD VERSUS SHOP WELDS TO ACCOMMODATE THE CONSTRUCTION SEQUENCING OF THE PROJECT.

    ALL WELDS SHALL BE MADE WITH A FILLER WELD METAL THAT HAS A MINIMUM CHARPY V-NOTCH TOUGHNESS OF 20 FT.-LBS. AT 0 DEGREES F. WELDS SPECIFICALLY DENOTED AS "DEMAND CRITICAL" SHALL BE MADE WITH FILLER WELD METAL THAT ADDITIONALLY HAS A MINIMUM CHARPY V-NOTCH TOUGHNESS OF 40 FT-LBS AT 70 DEGREES F. SEE AISC 341-10 CHAPTER A3 (4B) AND AWS D1.8 SECTION 6.3 FOR ADDITIONAL REQUIREMENTS. PROPOSED FILLER MATERIAL FOR BOTH SHOP AND FIELD WELDS SHALL BE SUBMITTED FOR REVIEW PRIOR TO CONSTRUCTION.

40. METAL FLOOR AND ROOF DECKING: PROVIDE SIZE, TYPE, GAGE, AND ATTACHMENT TO THE SUPPORTING STRUCTURE AS SHOWN ON THE DRAWINGS. ALTERNATES MUST BE CONNECTED ACCORDING TO PUBLISHED ICC-ES CRITERIA FOR DIAPHRAGM SHEARS SHOWN. PROVIDE SHORING WHERE REQUIRED PER MANUFACTURER'S PUBLISHED CRITERIA. ALL DECKING SHALL CONFORM TO THE REQUIREMENTS OF THE STEEL DECK INSTITUTE. SUBMIT DECK INFORMATION TO ARCHITECT AND ENGINEER PRIOR TO BEGINNING SHOP DRAWINGS.

41. COLD-FORMED STEEL FRAMING MEMBERS SHALL BE OF THE SHAPE, SIZE, AND GAGE SHOWN ON THE DRAWINGS. NOTATIONS ON THE DRAWINGS, RELATING TO MEMBER TYPES AND SIZES OR MISCELLANEOUS FRAMING ITEMS, REFER TO CATALOG NUMBERS OF THE "STEEL STUD MANUFACTURER'S ASSOCIATION" STANDARD SPECIFICATIONS, AND ICC-ESR REPORT NO. 3064P. ALTERNATE FRAMING SHALL BE SUBJECT TO REVIEW BY THE ARCHITECT AND STRUCTURAL ENGINEER PRIOR TO FABRICATION. ALL COLD-FORMED STEEL FRAMING SHALL ALSO CONFORM TO THE AISI "NORTH AMERICAN SPECIFICATION FOR THE DESIGN OF COLD-FORMED STEEL STRUCTURAL MEMBERS" AND THE AISI "CODE OF STANDARD PRACTICE FOR COLD-FORMED STRUCTURAL FRAMING." SEE 20/S7.1 FOR METAL FRAMING NOTES.

42. HEADED STUDS FOR COMPOSITE CONNECTION OF STRUCTURAL STEEL TO CONCRETE AND THREADED STUDS (CPL'S OR CFL'S) FOR CONNECTION OF STRUCTURAL STEEL TO OTHER ELEMENTS SHALL BE MANUFACTURED FROM MATERIAL CONFORMING TO ASTM A29 GR. 1010 THROUGH 1020 (TYPE 2, Fu = 60 KSI MIN.). HEADED STUDS SHALL BE WELDED IN CONFORMANCE WITH THE REQUIREMENTS OF A.W.S D1.1 CHAPTER 7. UNLESS OTHERWISE NOTED, STUDS SHALL BE WELDED BY THE AUTOMATIC MACHINE WELDING PROCESS IN CONFORMANCE WITH A.W.S. REQUIREMENTS.

    STUD TYPES SHALL BE MANUFACTURED BY NELSON STUD WELDING, INC. OR EQUIVALENT. HEADED STUDS SHALL BE TYPE S3L SHEAR CONNECTORS, THREADED STUDS SHALL BE TYPE CPL PARTIALLY THREADED STUDS OR TYPE CFL FULLY THREADED STUDS.

43. DEFORMED BAR ANCHORS (D2L's) SHALL BE TYPE D2L ANCHORS BY NELSON STUD WELDING, INC., OR EQUIVALENT. ANCHORS SHALL BE MADE FROM COLD ROLLED, DEFORMED STEEL CONFORMING TO ASTM A-496.

    AT NON-BRACED/MOMENT FRAME AND NON-STRUT CONNECTIONS, A706 GRADE 60 REINFORCING BARS OF AN EQUAL DIAMETER AND LENGTH OF THE SPECIFIED D2L's MAY BE USED PROVIDED THEY ARE WELDED TO THE SUPPORTING STEEL IN ACCORDANCE WITH THE TABLE BELOW:

BAR SIZE	ALL-AROUND FILLET WELD SIZE
#4	5/16"
#5	3/8"
#6	7/16"

44. BUCKLING RESTRAINED BRACES (BRB) SHALL CONFORM TO THE REQUIREMENTS OF AISC 341-10 AND SHALL BE ISSUED AS A DEFERRED SUBMITTAL PER GENERAL STRUCTURAL NOTE 12. REFER TO 10/S6.2 AND SPECIFICATIONS FOR REQUIREMENTS. DESIGN SHOWN ON THE DRAWINGS IS BASED ON BRACES MANUFACTURERED BY COREBRACE LLC OR BY UNBONDED BRACED (BY NIPPON STEEL). ALTERNATE MANUFACTURERS MAY BE USED SUBJECT TO REVIEW AND APPROVAL BY THE STRUCTURAL ENGINEER. BRB MANUFACTURER SHALL DESIGN ALL GUSSET PLATE CONNECTIONS IN ACCORDANCE WITH THE REQUIREMENTS OF AISC 341-10 AND AISC 360-10, IN ADDITION TO REQUIREMENTS SHOWNS ON THE DETAILS AND SPECIFICATIONS.

COUGHLIN PORTER LUNDEEN

801 SECOND AVENUE, SUITE 900
SEATTLE, WA 98104

(206) 343-0460 www.cplinc.com

MICHAEL A. ARMSTRONG — STATE OF WASHINGTON — 37839 — STRUCTURAL ENGINEER — PROFESSIONAL ENGINEER

01/20/20

BID SET

No.	Description	Date:

Project Title:

Fire Station 24

City of Kirkland
Kirkland, Washington

Sheet Title:

GENERAL STRUCTURAL NOTES

Scale:

Project No. : S19-0211-03

Date : 12/02/19

Sheet Number :

S1.3

C:\Revit Local\2019\KFS24_Structural_nickr9LRV7.rvt

Provided to Builders Exchange of WA, Inc. For usage Conditions Agreement see www.bxwa.com - Always Verify Scal

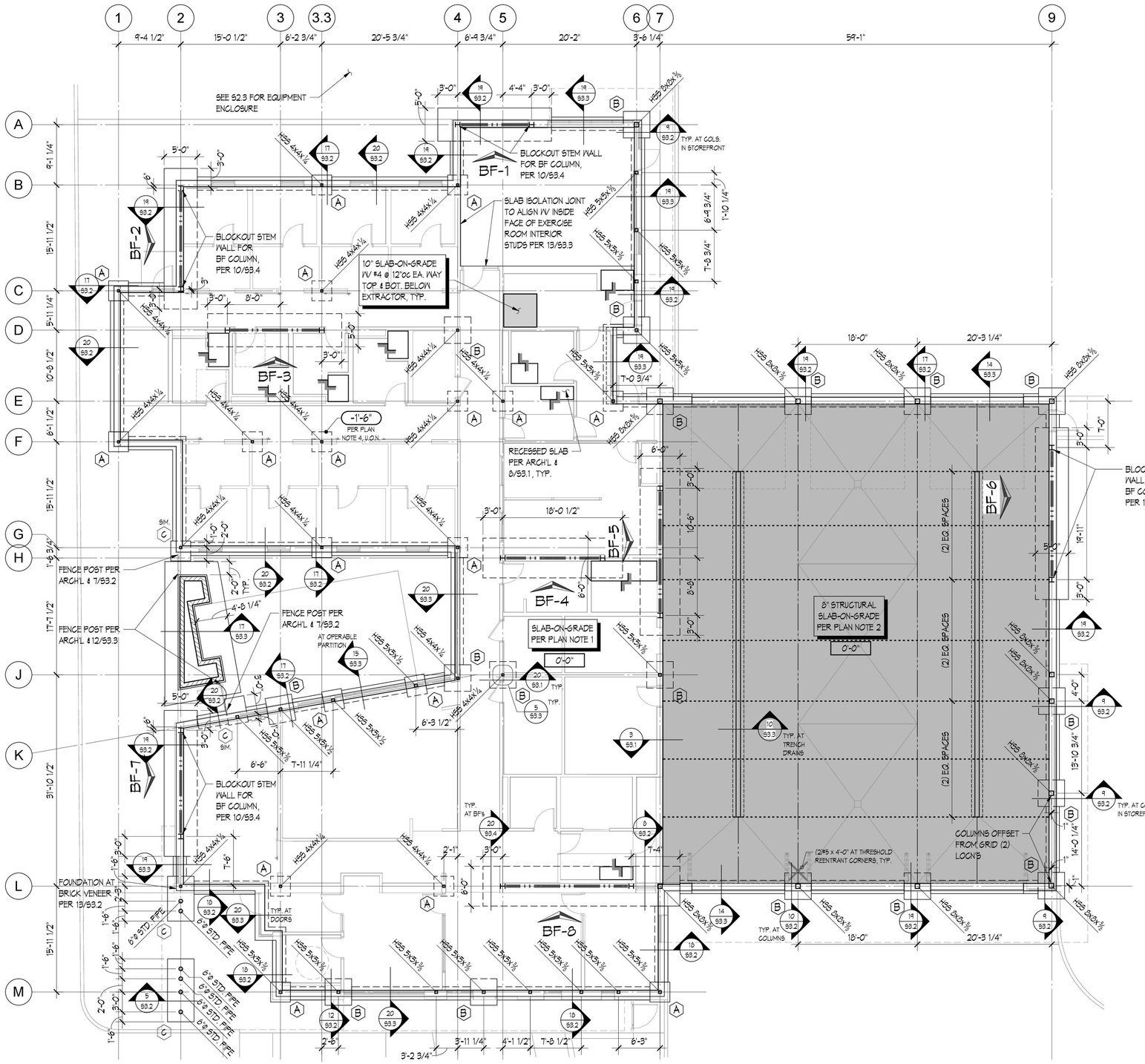

1 FOUNDATION PLAN
1/8" = 1'-0"

FOUNDATION PLAN NOTES:

1. TYPICAL SLAB-ON-GRADE SHALL BE 4" THICK WITH #4 @ 16"OC EA. WAY AT CENTER, U.O.N. OVER EXCAVATE A MINIMUM OF 1'-0" AND PLACE SUITABLE COMPACTED FILL AS DIRECTED BY GEOTECHNICAL ENGINEER. INSTALL MOISTURE BARRIER BELOW SLAB AT INTERIOR SPACES OVER 6" FREE-DRAINING GRANULAR FILL PER SPECIFICATIONS.

   ADD SHRINKAGE REDUCING ADMIXTURE PER SPECIFICATIONS.

   SEE ARCHITECTURAL DRAWINGS FOR SLAB DEPRESSION AND SLOPE REQUIREMENTS (SEE 8/S3.1 AT SLAB DEPRESSIONS).

2. APPARATUS BAY SLAB-ON-GRADE (SHOWN SHADED) SHALL BE 8" THICK WITH #5 @ 14"OC EA. WAY, TOP + SEE 5/S3.1. OVER EXCAVATE A MINIMUM OF 1'-0" AND PLACE SUITABLE COMPACTED FILL AS DIRECTED BY GEOTECHNICAL ENGINEER. INSTALL MOISTURE BARRIER BELOW SLAB AT INTERIOR SPACES OVER 6" FREE-DRAINING GRANULAR FILL PER SPECIFICATIONS.

   ADD SHRINKAGE REDUCING ADMIXTURE PER SPECIFICATIONS.

   SEE ARCHITECTURAL DRAWINGS FOR SLAB ELEVATIONS AND SLOPE REQUIREMENTS (SEE 8/S3.1 AT SLAB DEPRESSIONS). PROVIDE CONSTRUCTION AND CONTRACTION JOINTS AS SHOWN ON PLAN PER 5/S3.1.

3. PROVIDE CONSTRUCTION/CONTROL JOINTS IN SLABS ON GRADE TO DIVIDE SLAB INTO RECTANGULAR AREAS 140 SQUARE FEET OR LESS. AREAS SHALL BE APPROXIMATELY SQUARE AND HAVE NO ACUTE ANGLES. SEE SPECIFICATIONS FOR ADDITIONAL REQUIREMENTS. JOINT LOCATIONS MUST BE APPROVED BY THE ARCHITECT. SEE 10/S3.1.

4. TOPS OF ALL FOOTINGS SHOWN IN THIS PLAN SHALL BE AT ELEVATION -1'-6", U.O.N. OVER EXCAVATE AND PLACE SUITABLE COMPACTED FILL AS DIRECTED BY OWNER APPROVED GEOTECHNICAL ENGINEER WHERE REQUIRED. FOOTINGS SHALL BEAR ON SOILS REINFORCED USING AGGREGATE PIERS. AGGREGATE PIERS ARE NOT REQUIRED BELOW ANY SLABS-ON-GRADE. SEE GENERAL STRUCTURAL NOTE 15 AND SPECIFICATIONS FOR ADDITIONAL AGGREGATE PIER REQUIREMENTS. CONTRACTOR SHALL COORDINATE WITH FINAL SITE GRADES AND MAINTAIN MINIMUM DEPTH OF FOOTINGS SHOWN ON THE DRAWINGS.

5. SEE ARCHITECTURAL/MECHANICAL/CIVIL/UTILITIES DRAWINGS FOR UNDERSLAB PIPING. COORDINATE FOUNDATION DEPTHS AND PIPING IN ACCORDANCE WITH 13/S3.1.

6. SIZES OF MEMBERS OF BRACED FRAMES APPEAR ON BRACED FRAME ELEVATIONS.

7. AT METAL STUD FRAMING SEE 1/S7.1 AND 5/S6.3 FOR PROTECTED BRACED ZONE RESTRICTIONS AND STUD ATTACHMENT TO BRACED FRAMES.

LEGEND:

- X'-X" — TOP OF SLAB ELEVATION
- X'-X" — TOP OF FOOTING ELEVATION
- STEP IN TOP OF SLAB
- X — FOOTING MARK PER 20/S3.1
- high / low — STEP IN FOOTING PER 16/S3.1
- CONSTRUCTION JOINT PER 5/S3.1
- CONTROL JOINT PER 5/S3.1
- APPARATUS BAY SLAB-ON-GRADE PER PLAN NOTE 2
- MASONRY WALL OR PIER THIS LEVEL

SEISMIC FORCE RESISTING SYSTEM LEGEND:

(SEE GENERAL STRUCTURAL NOTE 13)

- BF-x — BUCKLING RESTRAINED BRACED FRAME PER ELEVATION OF SHEET S6.1

COUGHLIN PORTER LUNDEEN

801 SECOND AVENUE, SUITE 900
SEATTLE, WA 98104

(206) 343-0460 www.cplinc.com

MICHAEL A ARMSTRONG — STATE OF WASHINGTON — 37839 — STRUCTURAL ENGINEER — PROFESSIONAL ENGINEER

01/20/20

BID SET

No.	Description	Date:

Project Title:

Fire Station 24

City of Kirkland
Kirkland, Washington

Sheet Title:

FOUNDATION PLAN

Scale: 1/8" = 1'-0"
Project No. : S19-0211-03
Date : 12/02/19

Sheet Number :

S2.1

C:\Revit Local\2019\KFS24_Structural_nicks9LRV7.rvt

Provided to Builders Exchange of WA, Inc. For usage Conditions Agreement see www.bxwa.com - Always Verify Scal

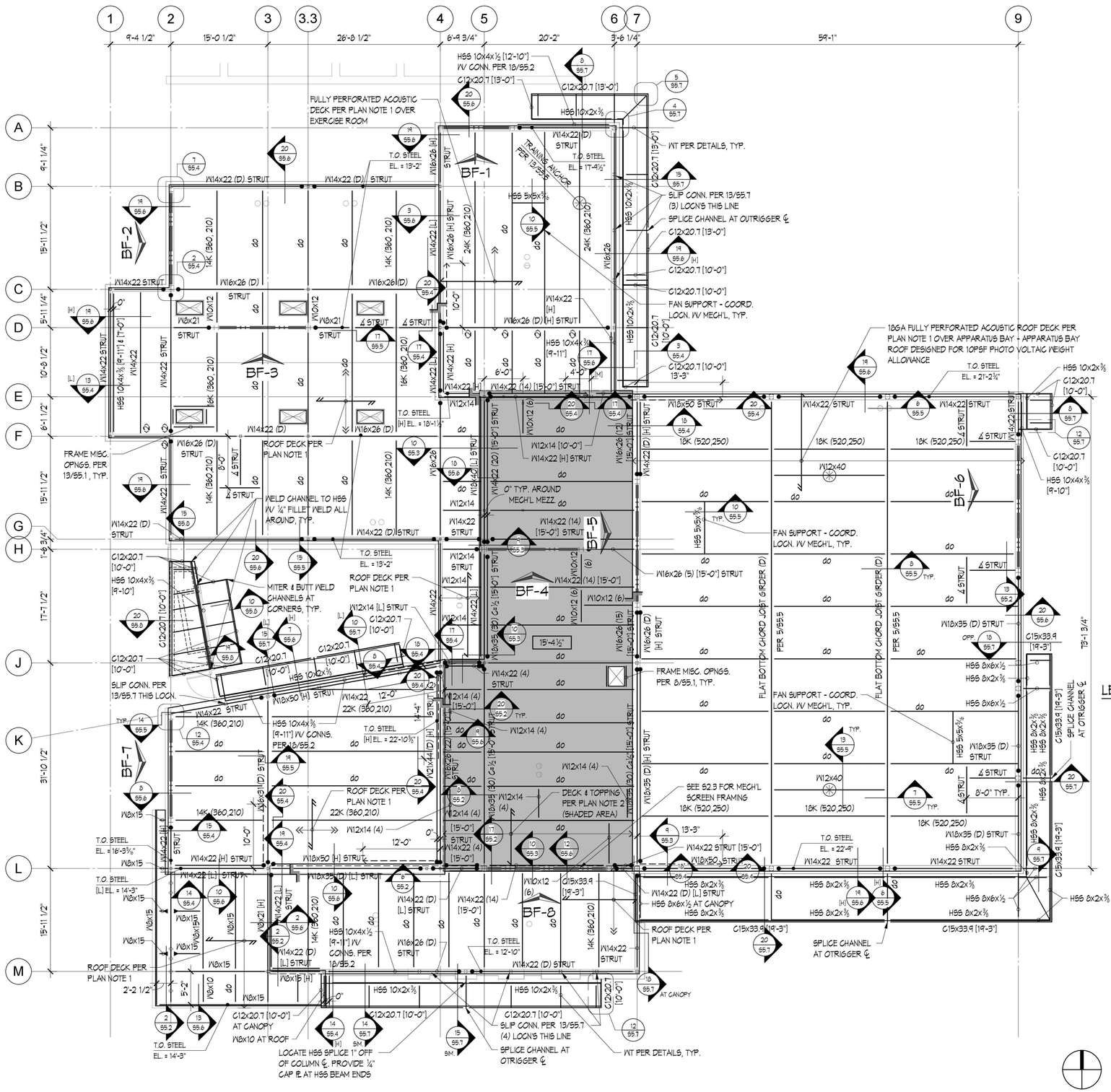
1
2
3
3.3
4
5
6
7
9
9'-4 1/2"
15'-0 1/2"
26'-8 1/2"
6'-9 3/4"
20'-2"
3'-6 1/4"
59'-1"
A
B
C
D
E
F
G
H
J
K
L
M
9'-1 1/4"
15'-11 1/2"
5'-11 1/4"
10'-5 1/2"
6'-1 1/2"
15'-11 1/2"
1'-6 3/4"
17'-7 1/2"
31'-10 1/2"
15'-11 1/2"
2'-2 1/2"
HSS 10X4X½ [12'-10"] W/ CONN. PER 18/55.2
C12X20.7 [13'-0"]
HSS 10X2X⅜
FULLY PERFORATED ACOUSTIC DECK PER PLAN NOTE 1 OVER EXERCISE ROOM
T.O. STEEL EL. = 13'-2"
W14X22 (D) STRUT
W16X26 (H) STRUT
BF-1
TRAINING ANCHOR PER 13/55.5
T.O. STEEL EL. = 17'-9½"
HSS 5X5X⅝
HSS 10X2X⅜
W16X26
24K (360.210)
W14X22 [L] STRUT
W16X26 (H) STRUT
W14X22 STRUT
W16X26 (D) STRUT
W16X26 (D)
14K (360.210)
BF-2
W10X12
W10X21
W8X21
W14X22 (D)
W14X22 [H] STRUT
W14X22 [L] STRUT
W14X22 [H]
W14X22 (14) [15'-0"] STRUT
BF-3
16K (360.210)
18K (360.210)
HSS 10X4X⅜ [9'-11"] & [7'-0"]
HSS 10X4X⅜ [9'-11"]
W12X14
W10X12 (6)
W16X26 (12)
W14X22 (20) [15'-0"] STRUT
W12X14 [10'-0"]
W14X22 [H] STRUT
W16X26 (D) STRUT
W14X22 (D) [15'-0"] STRUT
W18X40 [L] STRUT
W16X26
W14X22 (D) STRUT
W14X22 (D) [L] STRUT
W14X22 (D)
W14X22 STRUT
W12X14
W14X22 (14) [15'-0"] STRUT
BF-4
W10X12 (6)
W16X26 (15) [15'-0"] STRUT
W16X26 (D) [H] STRUT
W16X26 (5) [15'-0"] STRUT
W18X35 (D) [H] STRUT
W18X35 (30) C½ [15'-0"] STRUT
W18X35 (30) C½ [15'-0"] STRUT
W18X35 (D) [L] STRUT
W18X35 (D) STRUT
W18X50 [H] STRUT
W18X50 STRUT
W14X22 (4) STRUT
W12X14 (4)
W14X22 (4) [15'-0"]
W14X22 (14) [15'-0"]
W14X22 [H] STRUT
W14X22 [L] STRUT
W14X22 (D) [L] STRUT
W14X22 (D) STRUT
W14X22 STRUT

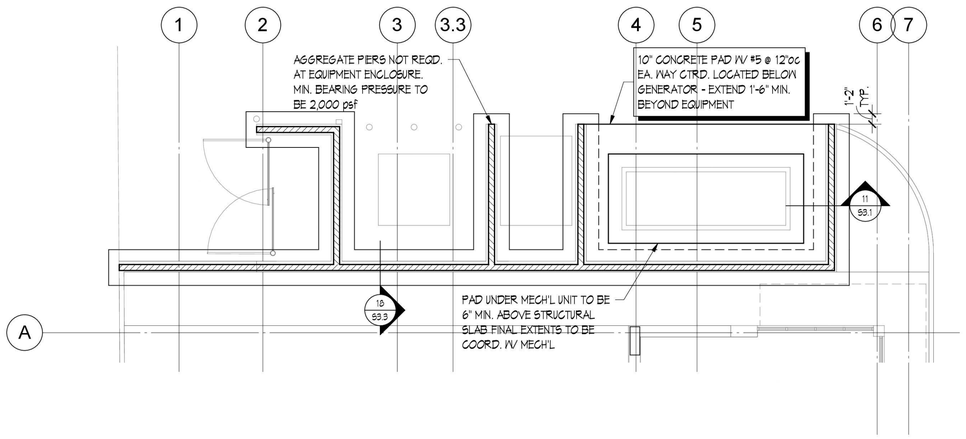

2 EQUIPMENT ENCLOSURE
1/8" = 1'-0"

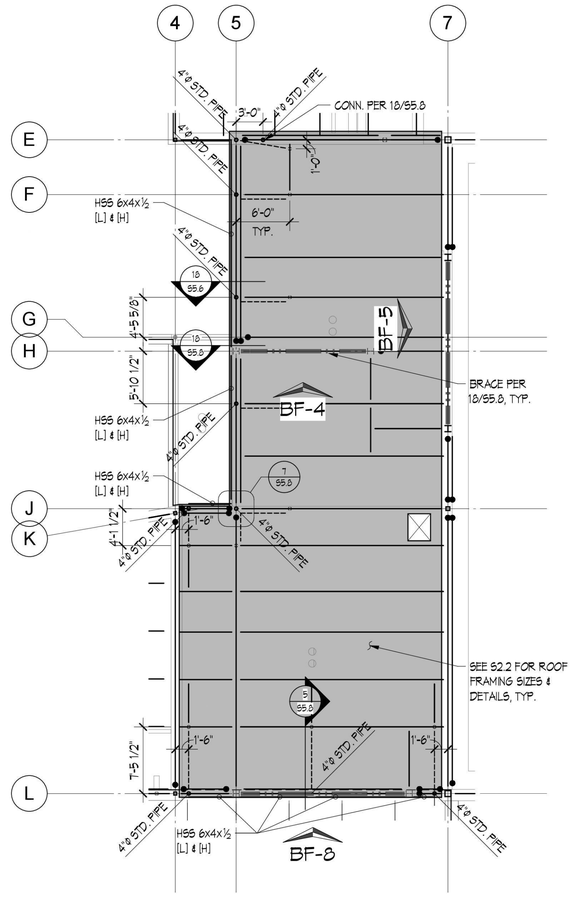

1 MECH'L PARTIAL PLAN
1/8" = 1'-0"

COUGHLIN
PORTER
LUNDEEN

801 SECOND AVENUE, SUITE 900
SEATTLE, WA 98104

(206) 343-0460 www.cplinc.com

MICHAEL A ARMSTRONG
STATE OF WASHINGTON
37839
STRUCTURAL ENGINEER
PROFESSIONAL ENGINEER
01/20/20

BID SET

No.	Description	Date:

Project Title:

Fire Station 24

City of Kirkland
Kirkland, Washington

Sheet Title:

EQUIPMENT ENCLOSURE & MECH'L SCREEN PLAN

Scale: 1/8" = 1'-0"
Project No. : S19-0211-03
Date : 12/02/19

Sheet Number :

S2.3

C:\Revit Local\2019\KFS24_Structural_nicks9LRV7.rvt

Provided to Builders Exchange of WA, Inc. For usage Conditions Agreement see www.bxwa.com - Always Verify Scal

I MINIMUM STRAIGHT DEVELOPMENT LENGTH (ℓ_d)

BAR SIZE	f'c = 4000 PSI		f'c = 5000 PSI	
	TOP BARS	OTHER BARS	TOP BARS	OTHER BARS
# 3	19"	15"	17"	13"
# 4	25"	19"	23"	17"
# 5	31"	24"	28"	22"
# 6	37"	29"	34"	26"
# 7	54"	42"	49"	38"
# 8	62"	48"	56"	43"
# 9	70"	54"	63"	48"
# 10	79"	61"	71"	54"
# 11	87"	67"	78"	60"

II MINIMUM LAP SPLICE LENGTHS (ℓ_s) (CLASS B)

BAR SIZE	f'c = 4000 PSI		f'c = 5000 PSI	
	TOP BARS	OTHER BARS	TOP BARS	OTHER BARS
# 3	24"	19"	22"	17"
# 4	33"	25"	29"	23"
# 5	41"	31"	36"	28"
# 6	49"	37"	44"	34"
# 7	71"	54"	63"	49"
# 8	81"	62"	72"	56"
# 9	91"	70"	81"	63"
# 10	102"	79"	92"	71"
# 11	114"	87"	102"	78"

✦ "TOP BARS" ARE HORIZONTAL BARS WITH MORE THAN 12" DEPTH OF CONCRETE CAST BELOW THEM (EXCLUDING WALL HORIZONTAL REINF.).

IF CLEAR CONCRETE COVER IS LESS THAN 1x THE DIAMETER OF THE BAR OR THE CENTER-TO-CENTER SPACING IS LESS THAN (3) BAR DIAMETERS, THEN VALUES SHALL BE INCREASED BY 50%.

3000

Reinforcing Splice & Development Length Schedule **7**

III MINIMUM EMBEDMENT LENGTHS (ℓ_{dh}) FOR STANDARD END HOOKS

BAR SIZE	f'c = 4000 PSI	f'c = 5000 PSI
# 3	6"	6"
# 4	7"	6"
# 5	9"	8"
# 6	10"	9"
# 7	12"	11"
# 8	14"	12"
# 9	15"	14"
# 10	17"	16"
# 11	19"	17"

1. SIDE COVER MUST BE EQUAL TO OR GREATER THAN 2½".
2. END COVER FOR 90° HOOKS MUST BE EQUAL TO OR GREATER THAN 2".

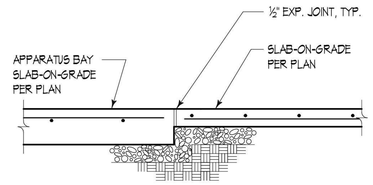

3814

3

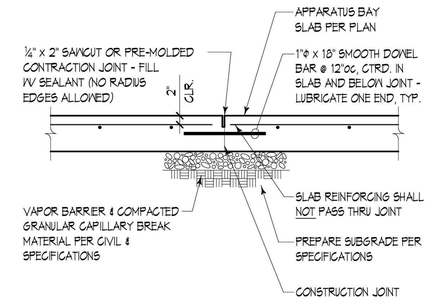

CONSTRUCTION JOINT

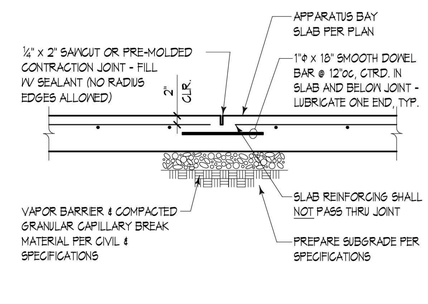

CONTROL JOINT

3202

Apparatus Bay Slab Joint **5**

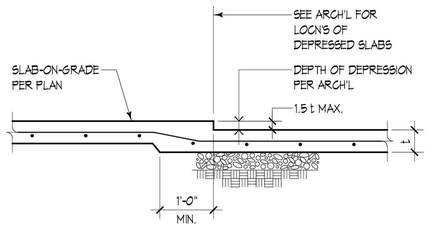

3005

Slab Step **8**

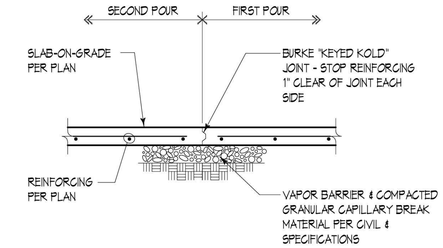

CONSTRUCTION JOINT

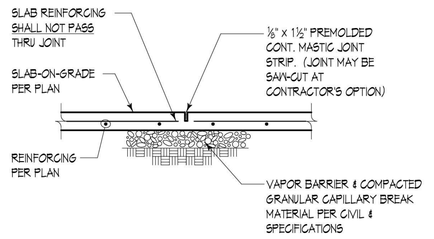

CONTROL JOINT

3001

Slab Joint **10**

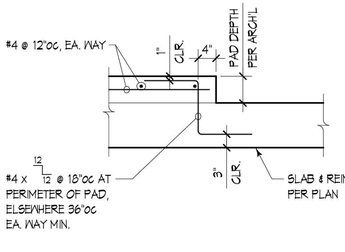

NOTE:
LOCATE PADS PER ARCH'L.

5049

Housekeeping Pads **11**

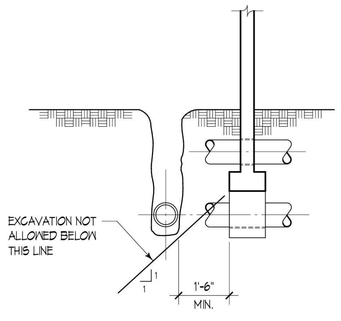

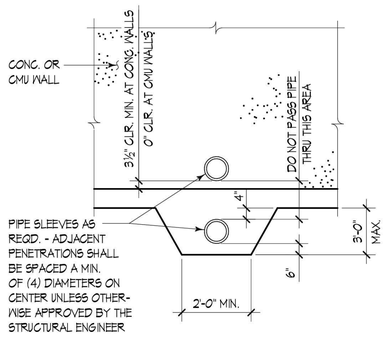

3010

Pipe Sleeve **13**

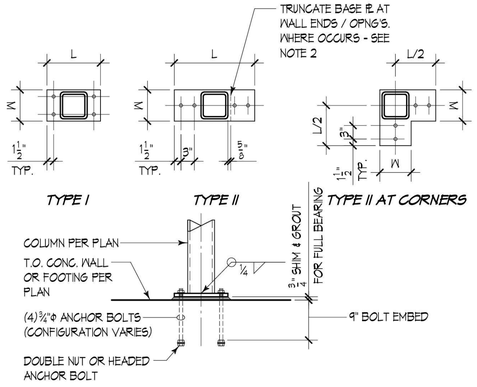

COLUMN SIZE	TYPE I		TYPE II		THICKNESS
	L	W	L	W	
HSS 4x4	12"	7"	16"	5"	½"
HSS 5x5	12"	7"	17"	5"	½"
HSS 6x6 /6"Φ PIPE	12"	7"	18"	7"	¾"
HSS 8x8	14"	9"	20"	9"	¾"

NOTES:
1. INSTALL OFFSET BASE PL AT WALL ENDS AND CORNER BASE PL AT WALL CORNERS WHERE REQUIRED.
2. WHERE OFFSET TYPE II BASE PL IS REQUIRED, TRUNCATE (1) SIDE AND INSTALL (2) BOLT CONNECTION AT OPPOSITE SIDE AS SHOWN.

3021

15

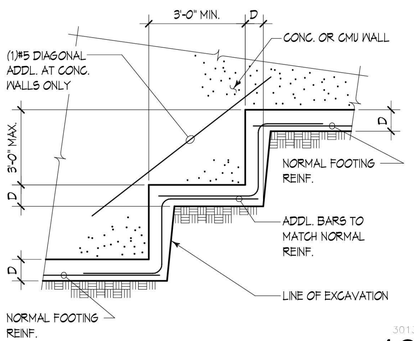

3013

Footing Step **16**

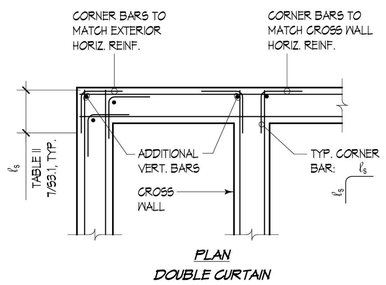

PLAN
DOUBLE CURTAIN

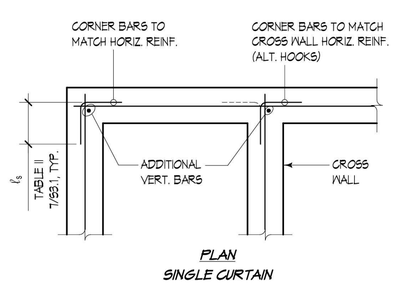

PLAN
SINGLE CURTAIN

3004

Corner Reinforcing **18**

MARK	SIZE	REINFORCING
A	3'-0" x 3'-0" x 12"	(4)#4 EA. WAY BOT.
B	4'-0" x 4'-0" x 16"	(5)#5 EA. WAY BOT.
C	3'-0" x PER PLAN x 12"	#5 @ 8"oc EA. WAY BOT. ((3)#5 EA. WAY TOP AT SIM.)

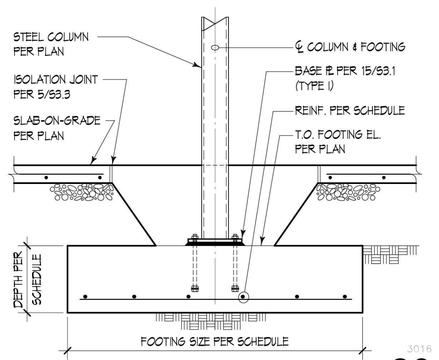

3016

20

Provided to Builders Exchange of WA, Inc. For usage Conditions Agreement see www.bxwa.com - Always Verify Scal

C:\Revit Local\2019\KFS24_Structural_nickr9LRV7.rvt

COUGHLIN PORTER LUNDEEN
801 SECOND AVENUE, SUITE 900
SEATTLE, WA 98104
(206) 343-0460 www.cplinc.com

MICHAEL A. ARMSTRONG — STATE OF WASHINGTON — 37839 — STRUCTURAL ENGINEER — PROFESSIONAL ENGINEER
01/20/20

BID SET

No.	Description	Date:

Project Title:

Fire Station 24
City of Kirkland
Kirkland, Washington

Sheet Title:

TYPICAL CONCRETE DETAILS

Scale: 3/4" = 1'-0"
Project No. : S19-0211-03
Date : 12/02/19

Sheet Number :

S3.1

1

2

3

4

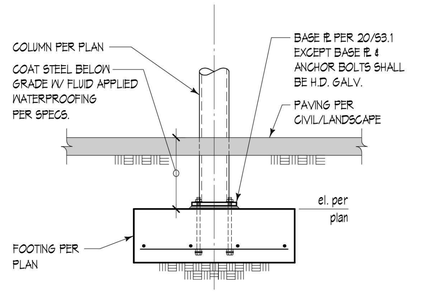

3815

5

6

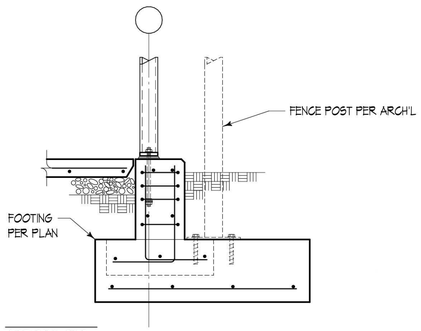

FOR CALL-OUTS IN COMMON SEE DETAIL 17/S3.2

3823

7

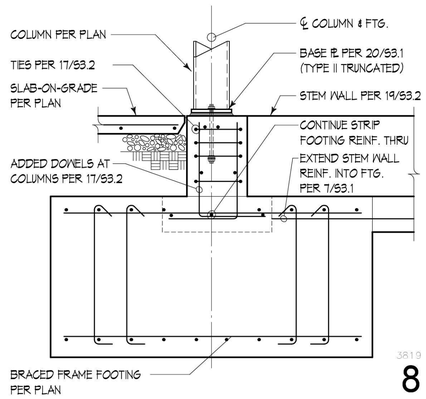

3819

8

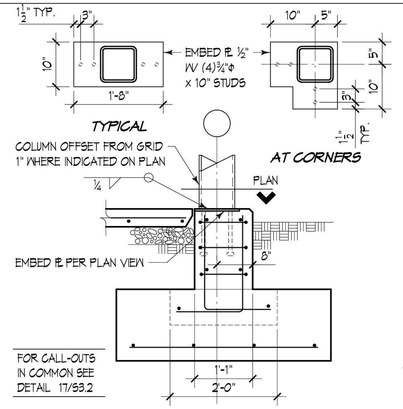

FOR CALL-OUTS IN COMMON SEE DETAIL 17/S3.2

3816

9

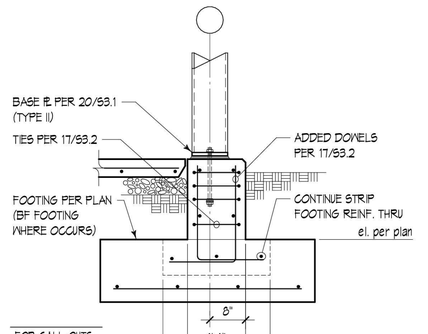

FOR CALL-OUTS IN COMMON SEE DETAIL 17/S3.2

3820

10

11

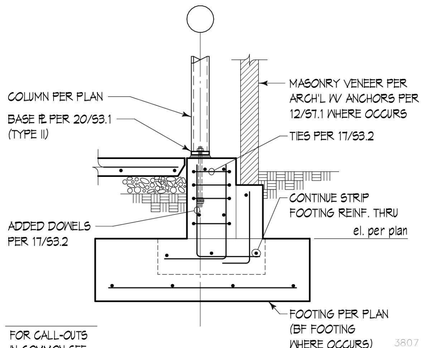

FOR CALL-OUTS IN COMMON SEE DETAIL 18/S3.2

3807

12

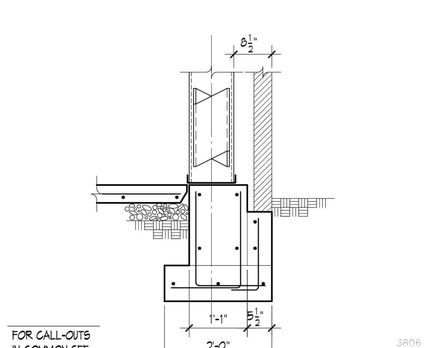

FOR CALL-OUTS IN COMMON SEE DETAIL 19/S3.2 & 18/S3.2

3806

13

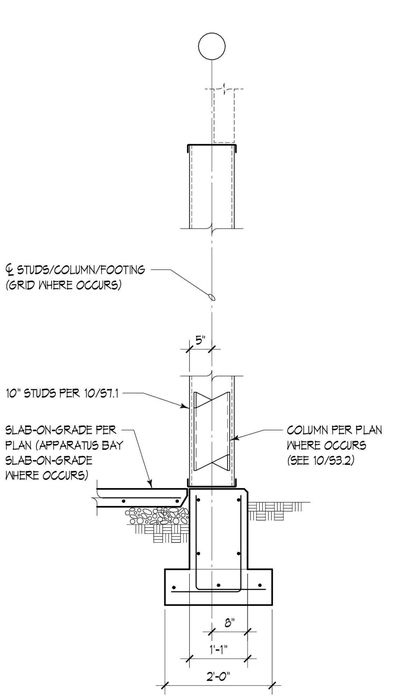

FOR CALL-OUTS IN COMMON SEE DETAIL 20/S3.2

3801

19

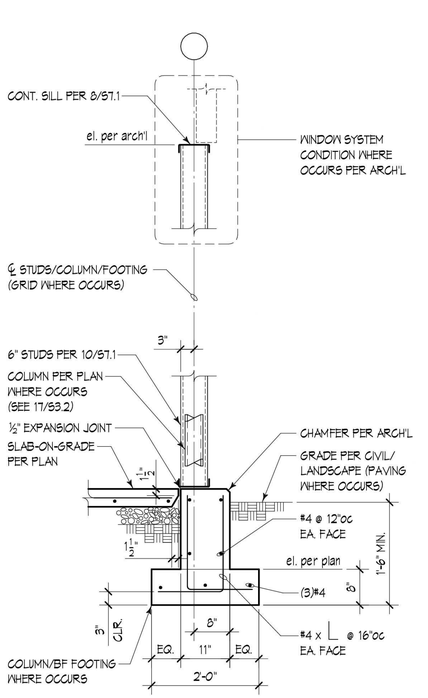

3800

20

16

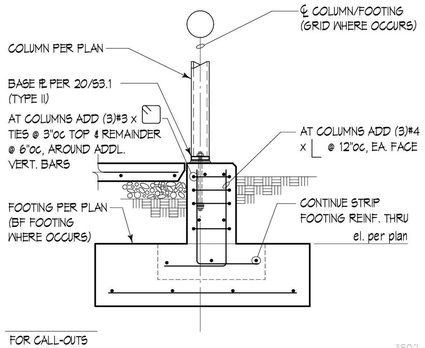

FOR CALL-OUTS IN COMMON SEE DETAIL 20/S3.2

3802

17

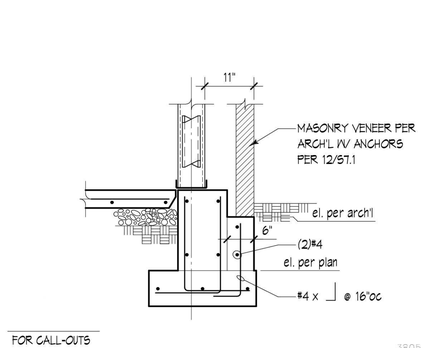

FOR CALL-OUTS IN COMMON SEE DETAIL 20/S3.2

3805

18

C:\Revit Local\2019\KFS24_Structural_nickr9LRV7.rvt

COUGHLIN PORTER LUNDEEN

801 SECOND AVENUE, SUITE 900
SEATTLE, WA 98104

(206) 343-0460 www.cplinc.com

MICHAEL A ARMSTRONG
STATE OF WASHINGTON
37839
STRUCTURAL ENGINEER
PROFESSIONAL ENGINEER
01/20/20

BID SET

No.	Description	Date:

Project Title:

Fire Station 24

City of Kirkland
Kirkland, Washington

Sheet Title:

CONCRETE DETAILS

Scale: **3/4" = 1'-0"**

Project No. : **S19-0211-03**

Date : **12/02/19**

Sheet Number :

S3.2

Provided to Builders Exchange of WA, Inc. For usage Conditions Agreement see www.bxwa.com - Always Verify Scal

1

2

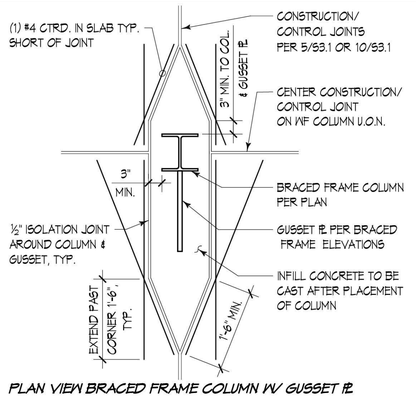

PLAN VIEW BRACED FRAME COLUMN W/ GUSSET PL.

3

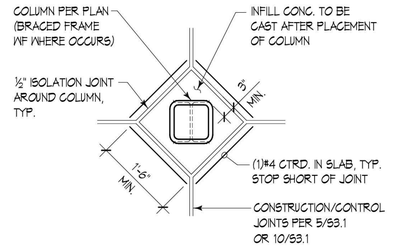

PLAN VIEW HSS COLUMN Isolation Joint

3012

5

6

7

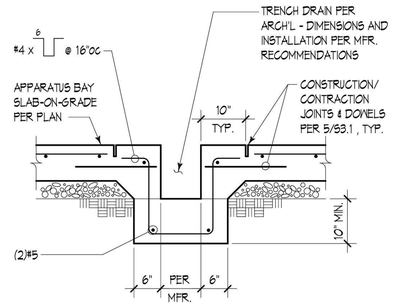

ALTERNATE TRENCH DETAIL

8

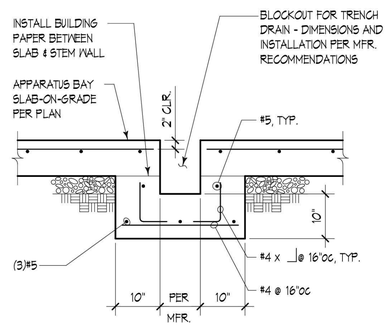

3203

TRENCH DETAIL

10

11

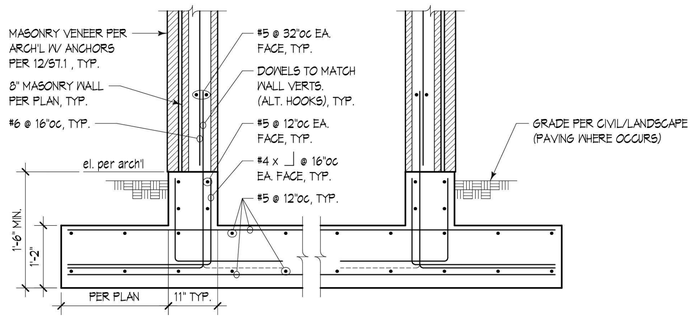

3822

17

12

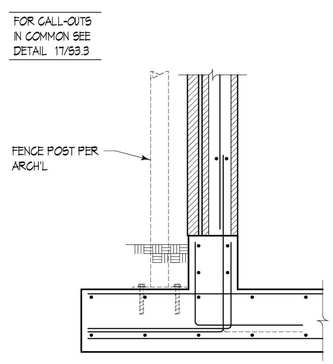

3824

13

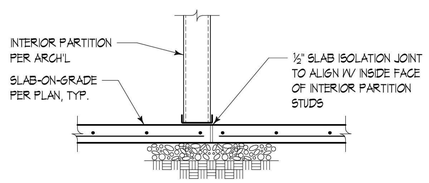

3821

14

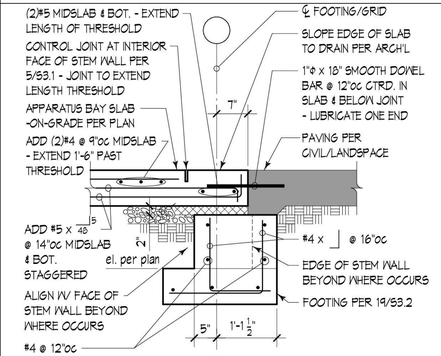

NOTE:
PROVIDE REENTRANT CORNER BARS PER PLAN

3811

FOR CALL-OUTS IN COMMON SEE DETAIL 20/S3.3

15

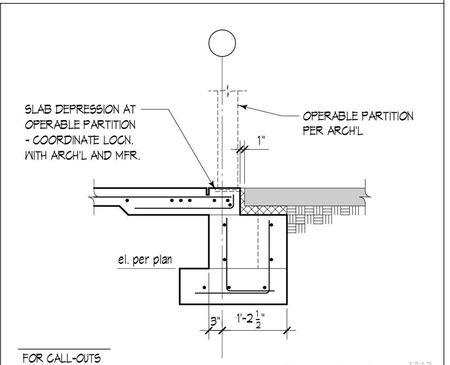

Bottom Bearing
Operable Partition Wall Support

3818

16

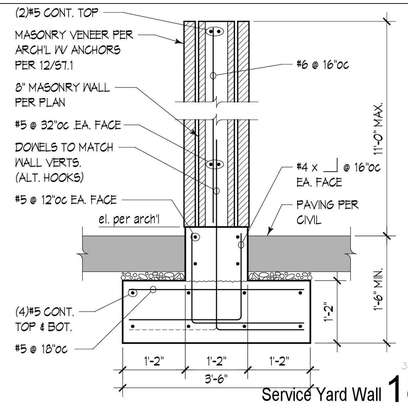

3803

Service Yard Wall

18

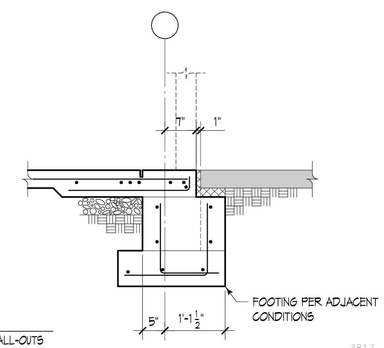

FOR CALL-OUTS IN COMMON SEE DETAIL 20/S3.3

3817

At Door Threshold or Window System

19

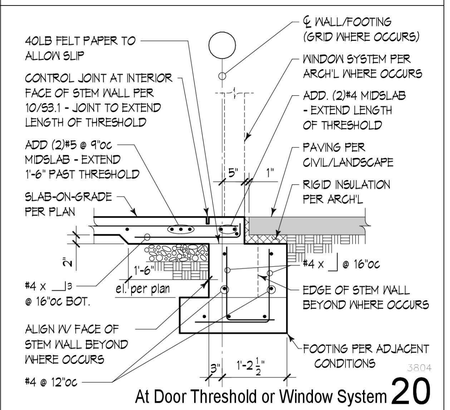

3804

At Door Threshold or Window System

20

COUGHLIN PORTER LUNDEEN
801 SECOND AVENUE, SUITE 900
SEATTLE, WA 98104
(206) 343-0460 www.cplinc.com

MICHAEL A ARMSTRONG
STATE OF WASHINGTON
37839
STRUCTURAL ENGINEER
PROFESSIONAL ENGINEER
01/20/20

BID SET

No.	Description	Date:

Project Title:

Fire Station 24

City of Kirkland
Kirkland, Washington

Sheet Title:

CONCRETE DETAILS

Scale: 3/4" = 1'-0"
Project No. : S19-0211-03
Date : 12/02/19

Sheet Number :

S3.3

C:\Revit Local\2019\KFS24_Structural_nickr8LRV7.rvt

Provided to Builders Exchange of WA, Inc. For usage Conditions Agreement see www.bxwa.com - Always Verify Scal

1

2

3

4

5

6

7

8

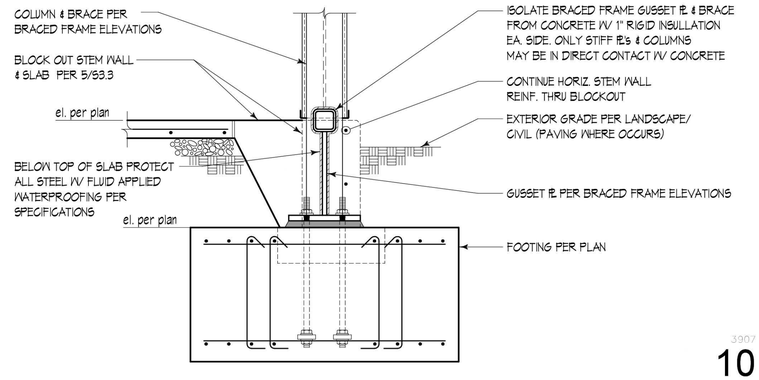

10

11

12

WIDTH PER PLAN	DEPTH	BOTTOM REINF.		TOP REINF.	
		LONG.	TRANS.	LONG.	TRANS.
5'-0"	2'-6"	(8)#6	#6 @ 12"OC	(8)#6	#6 @ 12"OC
6'-0"	3'-0"	(10)#7	#6 @ 12"OC	(10)#7	#6 @ 12"OC

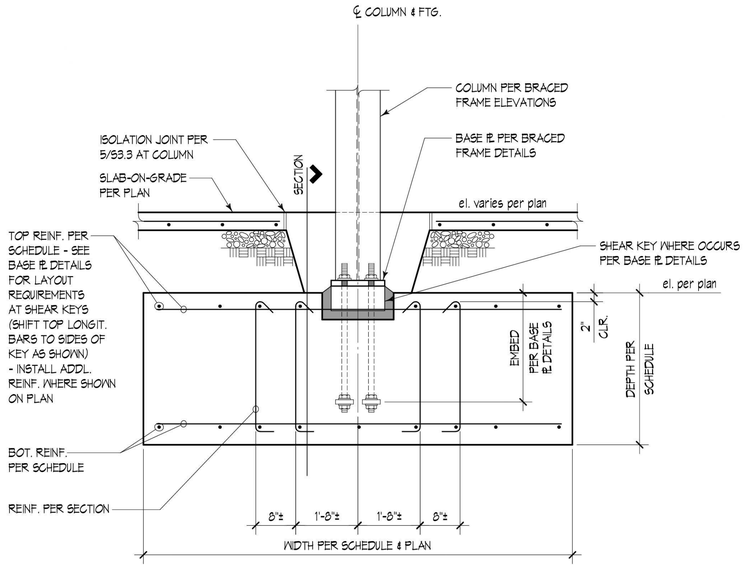

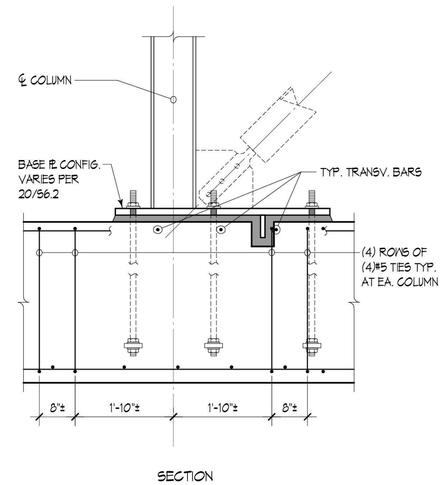

SECTION

16

17

20

COUGHLIN
PORTER
LUNDEEN

801 SECOND AVENUE, SUITE 900
SEATTLE, WA 98104

(206) 343-0460 www.cplinc.com

MICHAEL A ARMSTRONG
STATE OF WASHINGTON
37839
STRUCTURAL ENGINEER
PROFESSIONAL ENGINEER
01/20/20

BID SET

No.	Description	Date:

Project Title:

Fire Station 24

City of Kirkland
Kirkland, Washington

Sheet Title:

BRACED FRAME FOUNDATION DETAILS

Scale: 3/4" = 1'-0"

Project No. : S19-0211-03

Date : 12/02/19

Sheet Number :

S3.4

C:\Revit Local\2019\KFS24_Structural_nickr9LRV7.rvt

Provided to Builders Exchange of WA, Inc. For usage Conditions Agreement see www.bxwa.com - Always Verify Scal

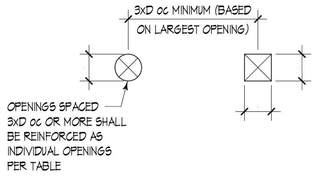

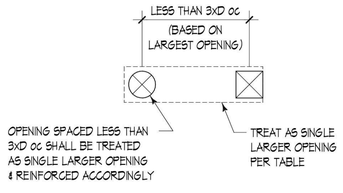

TYPICAL SPACING REQUIREMENTS FOR ALL OPENINGS

TYPICAL COMPOSITE DECK OPENINGS		
OPENING SIZE MEASURED PERPENDICULAR TO DECK FLUTES (SQUARE OR ROUND)	DETAIL REFERENCE	
	CORED OR SAWCUT OPENINGS (METAL DECK REMAINS INTACT UNTIL AT LEAST 3 DAYS AFTER CONCRETE POUR)	SLEEVED OR BLOCKED OUT OPENINGS (METAL DECK CUT PRIOR TO CONCRETE POUR)
D ≤ 6"	NO REINFORCING NECESSARY PROVIDED TYPICAL SPACING REQUIREMENTS ARE MET	NO REINFORCING NECESSARY PROVIDED TYPICAL SPACING REQUIREMENTS ARE MET
6" < D ≤ 13"	1	2
13" < D ≤ 24"	3	3
24" < D ≤ 48"	4	4

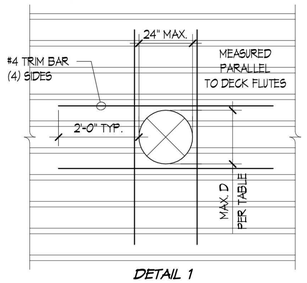

DETAIL 1

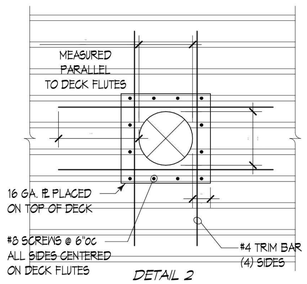

DETAIL 2

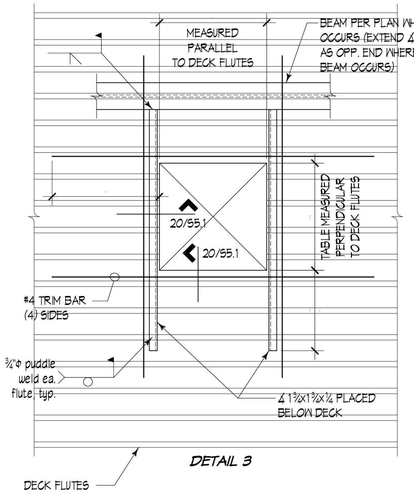

DETAIL 3

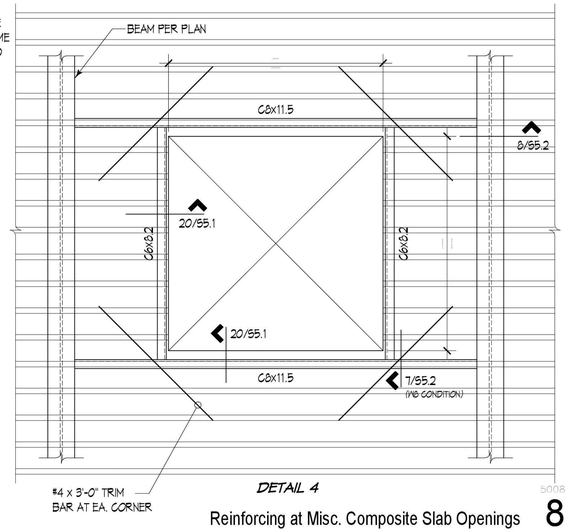

DETAIL 4

5008

Reinforcing at Misc. Composite Slab Openings **8**

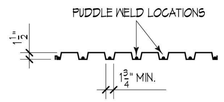

TYPE = ASC DGB-36 OR VERCO PLB-36, G60 GALVANIZED W/ FOLLOWING MIN. PROPERTIES:

Fy = 33ksi, PANEL WIDTH = 36"

ALLOWABLE SHEAR CAPACITY REQUIRED = 1400 plf

20GA.	18GA.	16GA.
I_e = +0.207/-0.231 $in.^4$	I_e = +0.30/-0.306 $in.^4$	I_e = ±0.381 $in.^4$
S_e = +0.23/-0.237 $in.^3$	S_e = +0.314/-0.324 $in.^3$	S_e = +0.397/-0.404 $in.^3$

	20GA.	18GA.	16GA.
SINGLE SPAN CONDITIONS	6'-0"	7'-0"	7'-6"
DOUBLE OR TRIPLE SPAN CONDITIONS	7'-6"	8'-6"	9'-0"

1. USE GAGE OF DECK PER SPAN TABLE AT LEFT, U.O.N. PER PLAN.
2. DECK ATTACHMENTS AT SUPPORTS PERPENDICULAR TO DECK FLUTES: (1) ½"ϕ EFFECTIVE PUDDLE WELDS PER SHEET AT TYPICAL SUPPORTS. (2) ROWS OF (1) ½"ϕ EFFECTIVE PUDDLE WELDS AT INTERIOR STRUTS, BRACED FRAME BEAMS, AND WALLS (WHERE DECK OCCURS BOTH SIDES OF SUPPORT, EXCLUDING OVERHANGS AND CHANGES IN DECK ORIENTATION).
3. DECK ATTACHMENTS AT SUPPORTS PARALLEL TO DECK FLUTES: ½"ϕ EFFECTIVE PUDDLE WELDS AT 12"oc AT TYPICAL SUPPORTS. ½"ϕ EFFECTIVE PUDDLE WELDS AT 12"oc AT INTERIOR STRUTS, BRACED FRAME BEAMS, AND WALLS (WHERE DECK OCCURS BOTH SIDES OF SUPPORT, EXCLUDING OVERHANGS AND CHANGES IN DECK ORIENTATION).
4. CONNECT DECK SEAMS @ 12"oc WITH THE PUNCHLOK SYSTEM FOR VERCO DECK OR THE DELTAGRIP SYSTEM FOR ASC DECK, U.O.N. PER PLAN.
5. DECK MUST STRICTLY MEET CRITERIA LISTED, INCLUDING ICC-ES RESEARCH REPORT ALLOWABLE SHEAR LOADS. SUBMIT DECK INFORMATION TO ENGINEER PRIOR TO BEGINNING SHOP DRAWINGS.
6. REINFORCE DECK OPENINGS PER 12/S5.1 , U.O.N. DECK OPENINGS MAY NOT BE SHOWN ON PLAN - SEE ARCH'L & MECH'L FOR ADDITIONAL INFO.
7. SEE DRAWINGS FOR LOCATIONS WHERE ACOUSTIC DECK IS REQUIRED (FULLY PERFORATED FLANGES AND WEBS). SEE SPECIFICATIONS FOR ACOUSTIC REQUIREMENTS.

5002

Roof Deck **5**

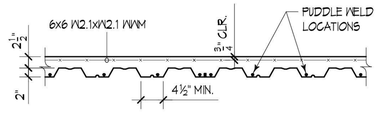

TYPE = ASC 2WH-36 OR VERCO W2 FORMLOK, G60 GALVANIZED W/ FOLLOWING MIN. PROPERTIES:

Fy = 50 ksi, PANEL WIDTH = 36"

20GA.	18GA.	16GA.
I_e = +0.416/-0.412 $in.^4$	I_e = +0.564/-0.560 $in.^4$	I_e = +0.707/-0.707 $in.^4$
S_e = +0.323/-0.333 $in.^3$	S_e = +0.471/-0.481 $in.^3$	S_e = +0.623/-0.638 $in.^3$

	2.5" TOPPING		
	20GA.	18GA.	16GA.
SINGLE SPAN CONDITIONS	8'-0"	9'-6"	10'-0"
DOUBLE SPAN CONDITIONS	9'-0"	11'-0"	13'-0"
TRIPLE SPAN CONDITIONS	9'-6"	11'-6"	12'-6"

1. USE GAGE OF DECK PER SPAN TABLE AT LEFT (SPAN TABLES ASSUME SHORING WILL NOT BE USED). DECK SHALL HAVE 125 PSF SUPERIMPOSED LOAD CAPACITY.
2. PROVIDE (4) ½"ϕ EFFECTIVE PUDDLE WELDS PER SHEET TO ALL SUPPORTS PERPENDICULAR TO DECK FLUTES. PROVIDE ½"ϕ EFFECTIVE PUDDLE WELDS @ 24"oc TO ALL SUPPORTS PARALLEL TO DECK FLUTES.
3. CONNECT DECK SEAMS WITH BUTTON PUNCHES @ 36"oc.
4. DECK MUST STRICTLY MEET CRITERIA LISTED INCLUDING ICC-ES RESEARCH REPORT ALLOWABLE SUPERIMPOSED LOADS. SUBMIT DECK INFORMATION TO ENGINEER PRIOR TO BEGINNING SHOP DRAWINGS.
5. REINFORCE MISC. DECK OPENINGS PER 8/S5.1, U.O.N. DECK OPENINGS MAY NOT BE SHOWN ON PLAN - SEE ARCH'L & MECH'L FOR ADD'L INFO.
6. SEE 18/S5.1 FOR CONSTRUCTION JOINTS.
7. VENTED DECK SHALL BE USED AT LOCATIONS WHERE ROOFING OR WATERPROOFING MEMBRANE WILL BE APPLIED OVER THE CONCRETE SURFACE.

5005

Composite Floor Deck **10**

11

12

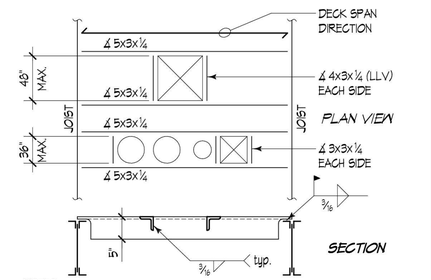

NOTES:

1. WELD DECK TO ANGLES W/ ½"ϕ PUDDLE WELDS @ 6"oc ALL AROUND OPNG.
2. NO REINF. REQUIRED FOR SINGLE OPENINGS 6" DIAMETER or 6" SQR. or LESS.
3. LARGER OPENINGS MUST BE COORDINATED W/ ARCHITECT & ENGINEER.

5006

Reinforcing at Misc. Roof Deck Openings **13**

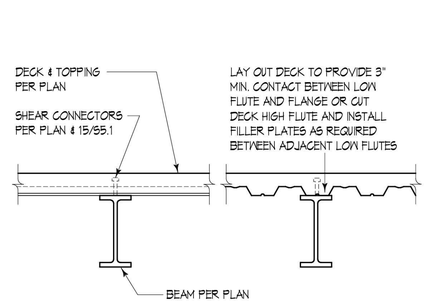

DECK PERPENDICULAR TO BEAM *DECK PARALLEL TO BEAM*

5011

Composite Deck Layout **14**

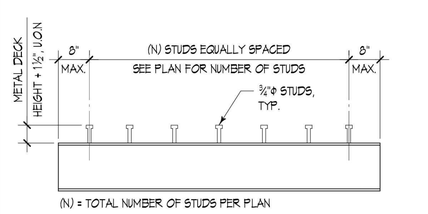

TYPICAL BEAM

NOTES:

1. CENTER CONNECTORS OVER BEAMS AND GIRDERS TYPICAL.
2. WHERE DECK FLUTES ARE PERPENDICULAR TO BEAMS USE (2) STUDS PER FLUTE @ 3"oc WHERE NUMBER OF STUDS EXCEEDS NUMBER OF FLUTES.
3. SEE GENERAL STRUCTURAL NOTES FOR STUD REQUIREMENTS.

5014

Typical Stud Distribution **15**

16

17

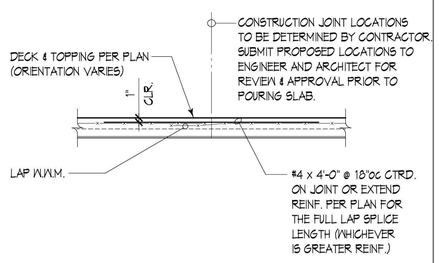

5020

18

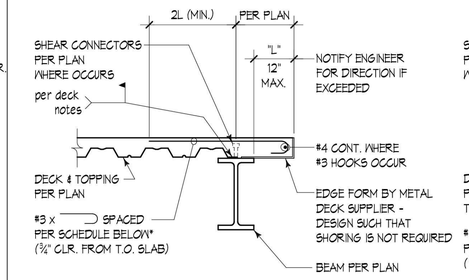

DECK PARALLEL TO BEAM

* SPACING SCHEDULE

L ≤ 4½"	OMIT #3 BARS
4½" < L ≤ 8"	32"oc
8" < L ≤ 12"	24"oc

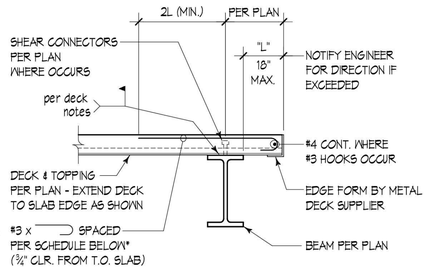

DECK PERPENDICULAR TO BEAM

* SPACING SCHEDULE

L ≤ 6"	OMIT #3 BARS
6" < L ≤ 12"	32"oc
10" < L ≤ 18"	24"oc

5015

Composite Deck Edge Form **20**

COUGHLIN PORTER LUNDEEN

801 SECOND AVENUE, SUITE 900
SEATTLE, WA 98104

(206) 343-0460 www.cplinc.com

MICHAEL A. ARMSTRONG — STATE OF WASHINGTON — 37839 — STRUCTURAL ENGINEER — PROFESSIONAL ENGINEER

01/20/20

BID SET

No.	Description	Date:

Project Title:

Fire Station 24

City of Kirkland
Kirkland, Washington

Sheet Title:

TYPICAL METAL DECK DETAILS

Scale: 3/4" = 1'-0"
Project No. : S19-0211-03
Date : 12/02/19

Sheet Number :

S5.1

C:\Revit Local\2019\KFS24_Structural_nickr9LRV7.rvt

Provided to Builders Exchange of WA, Inc. For usage Conditions Agreement see www.bxwa.com - Always Verify Scal

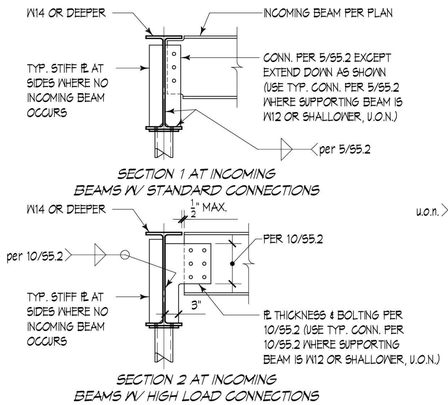

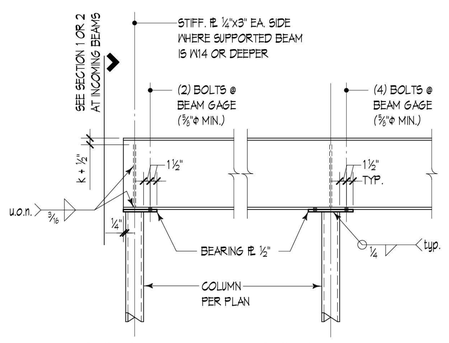

5009

Beam Bearing on Column (TS) **2**

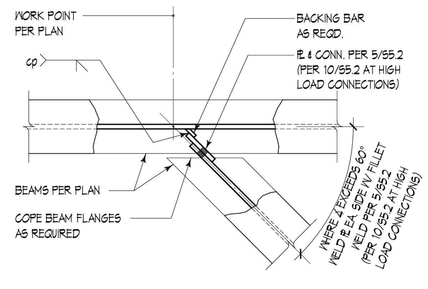

5004

Skewed Beam to Beam Connection **3**

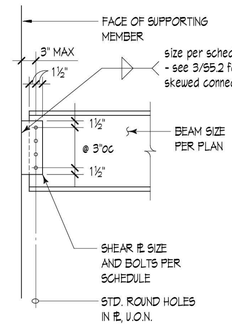

STANDARD BEAM CONNECTION SCHEDULE

BEAM SIZE	BOLT SIZE (A325N)	NO. OF BOLTS U.O.N.	PL THICKNESS	WELD SIZE
W8, W10, C8, C10 WT7 THRU WT10.5	⅞"Φ	2	⅜"	¼"
W12, W14, WT12, C12	⅞"Φ	3	⅜"	¼"
W16	⅞"Φ	4	⅜"	¼"
W18, W21	⅞"Φ	5	⅜"	¼"

NOTES:
1. SEE 10/S5.2 FOR HIGH LOAD CONNECTIONS WHERE SPECIFICALLY NOTED ON PLAN (SEE LEGEND ON PLAN SHEETS) OR DETAILS.

5000

5

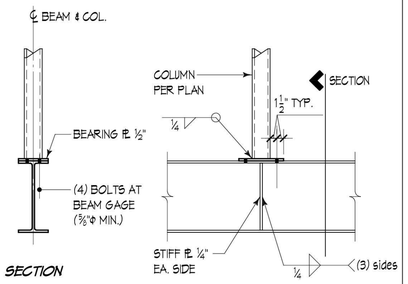

5016

TS Column Bearing on WF Beam **6**

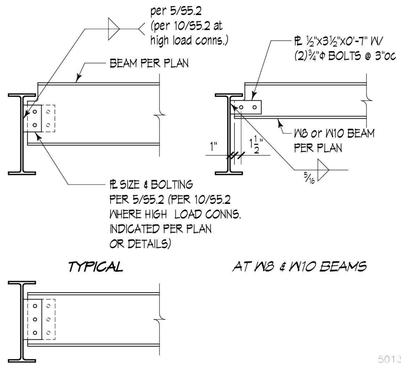

5013

Beam-Beam offset height connection **7**

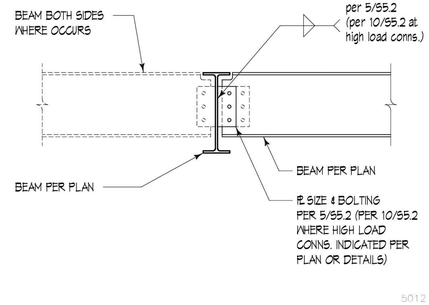

5012

Beam to Beam Connection **8**

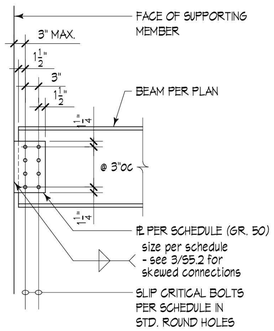

HIGH LOAD CONNECTION

BEAM SIZE	BOLT SIZE (A325N-SC)	NO. OF BOLTS U.O.N.	PL THICKNESS (GR. 50)	WELD SIZE
W8, W10	⅞"Φ	4	½"	5/16"
W12, W14	⅞"Φ	6	½"	5/16"
W16	⅞"Φ	8	½"	5/16"
W18, W21	⅞"Φ	10	½"	5/16"

NOTES:
1. PROVIDE MINIMUM OF CLASS A FAYING SURFACE ON PL & BEAM WEB FOR INSTALLATION OF SLIP CRITICAL BOLTS.
2. HIGH LOAD CONNECTION REQUIRED ONLY WHERE SPECIFICALLY NOTED ON PLAN (SEE LEGEND ON PLAN SHEETS) OR DETAILS.

5001

10

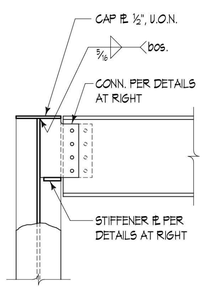

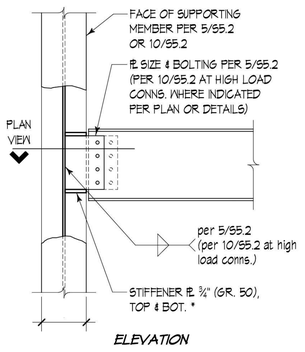

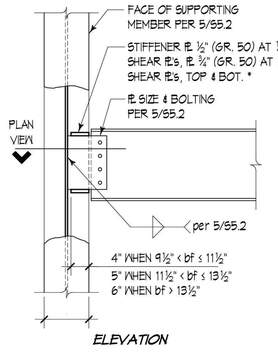

* CONTINUITY PL'S PER 20/S6.3 WHERE OCCURS AT BRACED FRAME COLUMNS IN LIEU OF STIFFENER PL'S

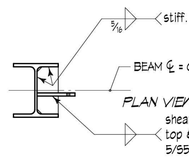

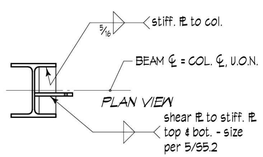

5026

Beam to WF Column - Weak Axis **17**

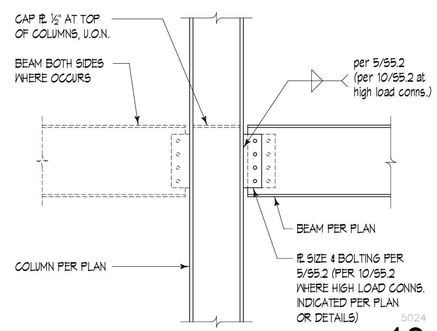

5024

Beam to WF Column - Strong Axis **13**

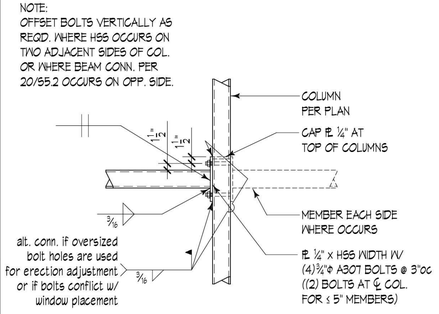

5028

HSS to HSS Connection **18**

* THIS PLAN VIEW ONLY APPLIES WHERE HIGH LOAD CONN. OCCURS ON ALL (4) SIDES OF COLUMN, OR WHERE HIGH LOAD CONN. OCCURS ON OPP. SIDES OF COLUMN, BUT CANNOT BE KERFED DUE TO PERPENDICULAR KERF PL CONN.

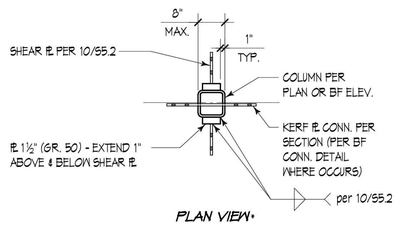

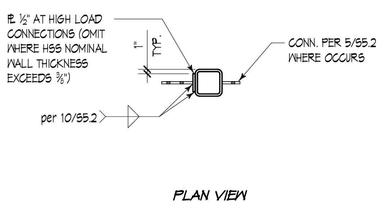

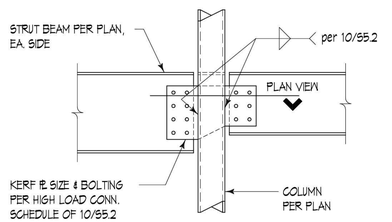

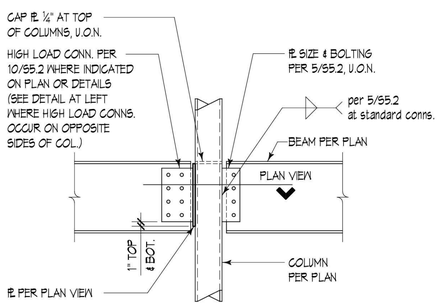

5018

Beam to HSS Column **20**

COUGHLIN PORTER LUNDEEN

801 SECOND AVENUE, SUITE 900
SEATTLE, WA 98104

(206) 343-0460 www.cplinc.com

MICHAEL A ARMSTRONG — STATE OF WASHINGTON — 37839 — STRUCTURAL ENGINEER — PROFESSIONAL ENGINEER

01/20/20

BID SET

No.	Description	Date:

Project Title:

Fire Station 24

City of Kirkland
Kirkland, Washington

Sheet Title:

TYPICAL STEEL DETAILS

Scale: 3/4" = 1'-0"
Project No. : S19-0211-03
Date : 12/02/19

Sheet Number :

S5.2

C:\Revit Local\2019\KFS24_Structural_nickr9LRV7.rvt

Provided to Builders Exchange of WA, Inc. For usage Conditions Agreement see www.bxwa.com - Always Verify Scal

1

2

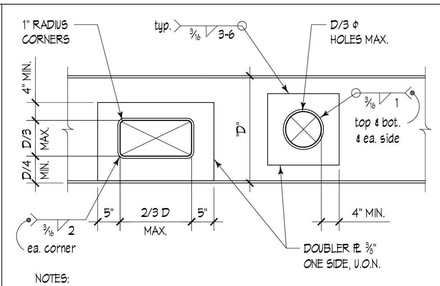

NOTES:

1. PENETRATIONS SHALL MEET CRITERIA NOTES 1, 3, 4, 5, AND 7 OF TYPICAL BEAM PENETRATION DETAIL - SEE 5/S5.3 .
2. EDGE OF OPENING SHALL BE A MINIMUM OF 16" CLEAR FROM EDGE OF BEAM CONNECTION PL AT EACH END.

5022

Typical Beam Penetrations 3

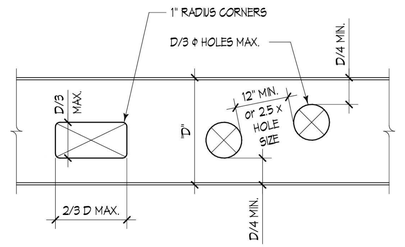

NOTES:

1. CONTRACTOR SHALL COORDINATE SIZES AND LOCATIONS OF ALL BEAM PENETRATIONS WITH MECHANICAL DRAWINGS. ALL PENETRATIONS LARGER THAN 2"ϕ SHALL BE SHOWN ON SHOP DRAWINGS OR SKETCHES AND SHALL BE SUBMITTED TO THE ENGINEER FOR APPROVAL. FIELD CUTTING NOT PERMITTED WITHOUT APPROVAL.
2. OPENINGS MAY OCCUR IN MIDDLE HALF OF BEAM LENGTH ONLY. SEE 3/S5.3 FOR OPENINGS OUTSIDE THIS AREA.
3. NO CUTTING SHALL OCCUR IN TOP OR BOTTOM QUARTER OF BEAM DEPTH.
4. ADJACENT OPENINGS SHALL BE SPACED AT THE LESSER OF 12" OR 2.5x LARGER OPENING SIZE, EDGE TO EDGE.
5. MAXIMUM SIZES OF OPENINGS SHALL BE D/3 ϕ OR D/3 x 2/3 D.
6. NO OPENINGS SHALL OCCUR WITHIN 12" OF AN ADJACENT BEAM CONNECTION.
7. REQUIRED OPENINGS NOT MEETING ABOVE CRITERIA SHALL BE SUBMITTED TO ENGINEER FOR REINFORCING DESIGN.

5021

Typical Beam Penetrations 5

6

7

8

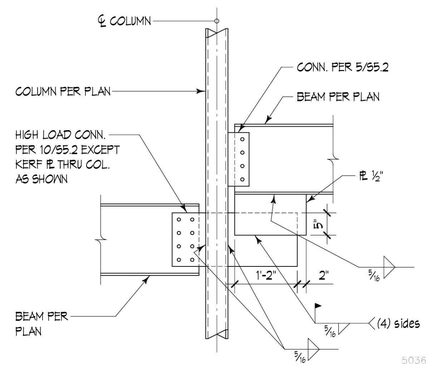

5036

Strut Connection Thru Column 9

NOTE:
AT BEAMS LONGER THAN 12' INSTALL (2) PAIRS OF PLATES AT THE THIRD POINTS OF THE BEAM SPAN. AT BEAMS SHORTER THAN 12' INSTALL (1) PAIR OF PLATES AT THE CENTER OF THE BEAM SPAN.

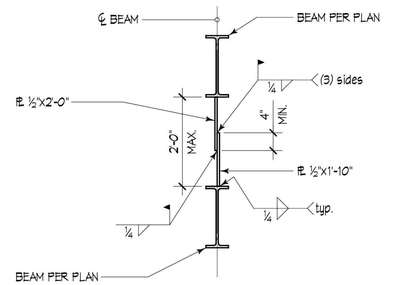

5038

Overlapping Strut Plates 10

11

12

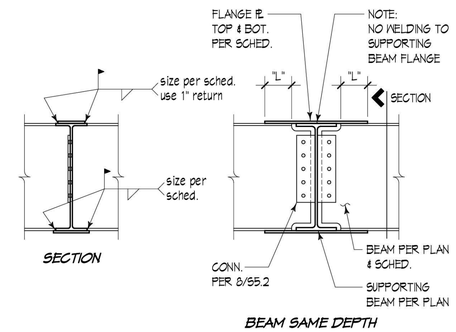

BEAM SIZE	FLANGE PL'S TOP	FLANGE PL'S BOT.	"L"	WELD SIZE
W10x15	⅜"x3"	¼"x5"	5"	⅜"

5025

15

16

17

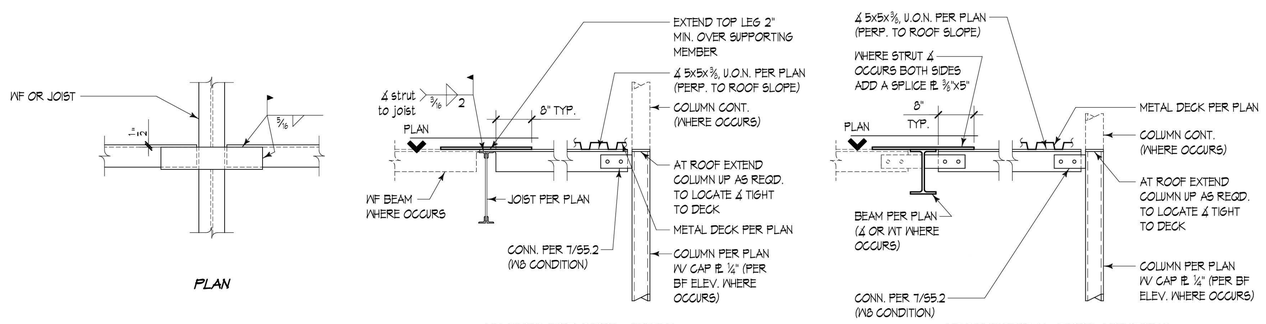

5063

20

COUGHLIN PORTER LUNDEEN

801 SECOND AVENUE, SUITE 900
SEATTLE, WA 98104

(206) 343-0460 www.cplinc.com

MICHAEL A ARMSTRONG — STATE OF WASHINGTON — 37839 — STRUCTURAL ENGINEER — PROFESSIONAL ENGINEER

01/20/20

BID SET

No.	Description	Date:

Project Title:

Fire Station 24

City of Kirkland
Kirkland, Washington

Sheet Title:

TYPICAL STEEL DETAILS

Scale: 3/4" = 1'-0"
Project No. : S19-0211-03
Date : 12/02/19

Sheet Number :

S5.3

C:\Revit Local\2019\KFS24_Structural_nickr8LRV7.rvt

Provided to Builders Exchange of WA, Inc. For usage Conditions Agreement see www.bxwa.com - Always Verify Scal

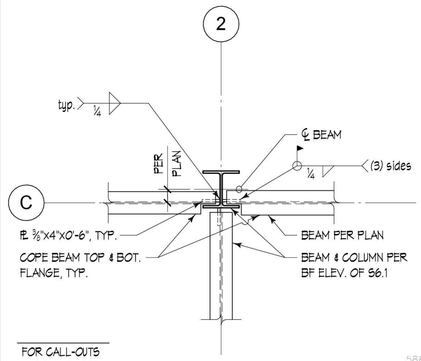

FOR CALL-OUTS IN COMMON SEE DETAIL 12/S5.4

PLAN

5860

2

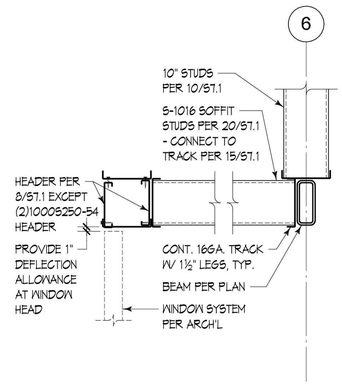

5862

3

NOTE:
FOR BIDDING PURPOSES, SEE ARCH'L FOR ASSUMED LOCATIONS & QUANTITIES OF ANCHORS OF TYPES (1) & (2).

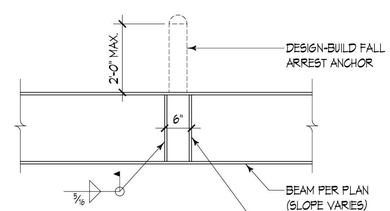

DETAIL (1) AT WF BEAMS

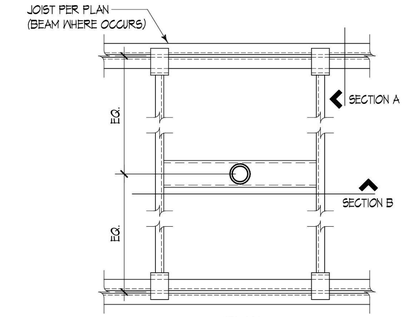

PLAN

DETAIL (2) AT JOISTS

1

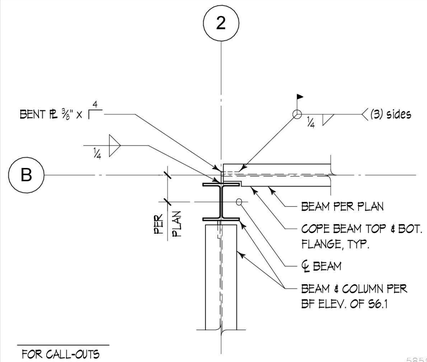

FOR CALL-OUTS IN COMMON SEE DETAIL 12/S5.4

PLAN

5859

7

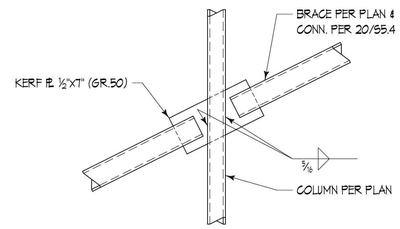

5305

8

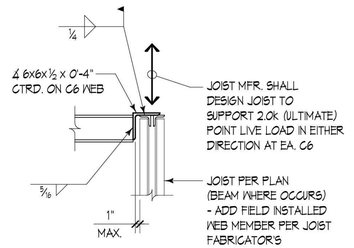

SECTION A

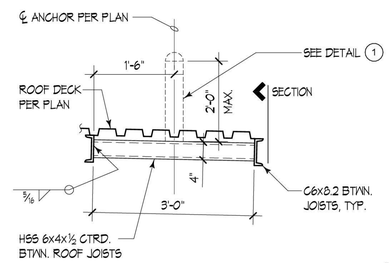

SECTION B

5061

10

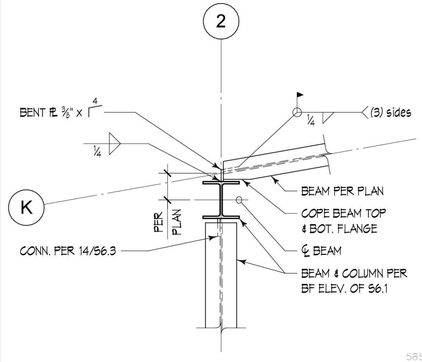

PLAN

5858

12

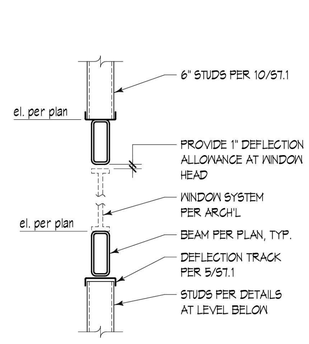

5852

13

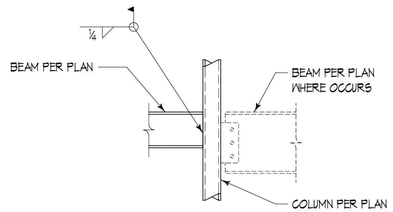

5827

14

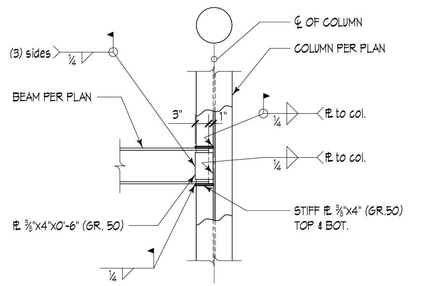

5301

15

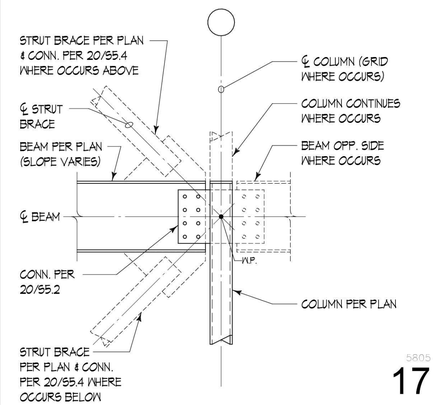

5805

17

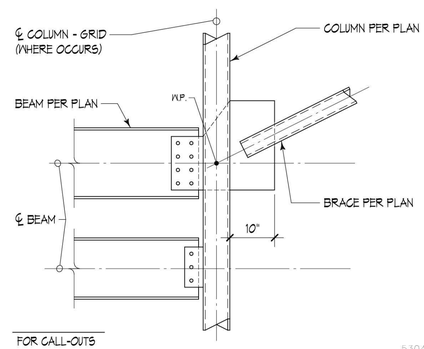

FOR CALL-OUTS IN COMMON SEE DETAIL 19/S5.4

5304

18

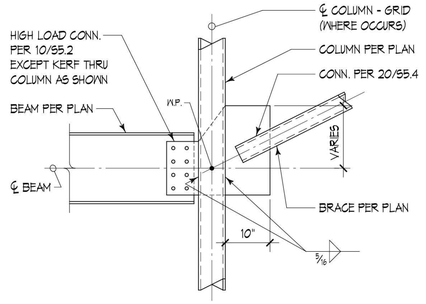

5300

19

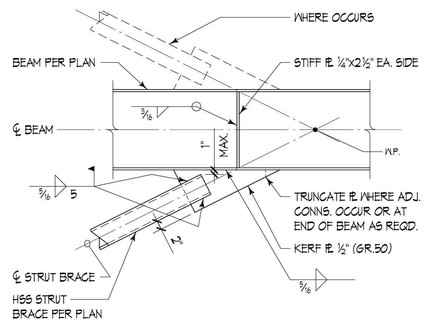

5803

20

COUGHLIN PORTER LUNDEEN
801 SECOND AVENUE, SUITE 900
SEATTLE, WA 98104
(206) 343-0460 www.cplinc.com

MICHAEL A ARMSTRONG
STATE OF WASHINGTON
37839
STRUCTURAL ENGINEER
PROFESSIONAL ENGINEER
01/20/20

BID SET

No.	Description	Date:

Project Title:

Fire Station 24

City of Kirkland
Kirkland, Washington

Sheet Title:

STEEL DETAILS

Scale: 3/4" = 1'-0"
Project No. : S19-0211-03
Date : 12/02/19

Sheet Number :

S5.4

C:\Revit Local\2019\KFS24_Structural_nickr9LRV7.rvt

Provided to Builders Exchange of WA, Inc. For usage Conditions Agreement see www.bxwa.com - Always Verify Scal

1

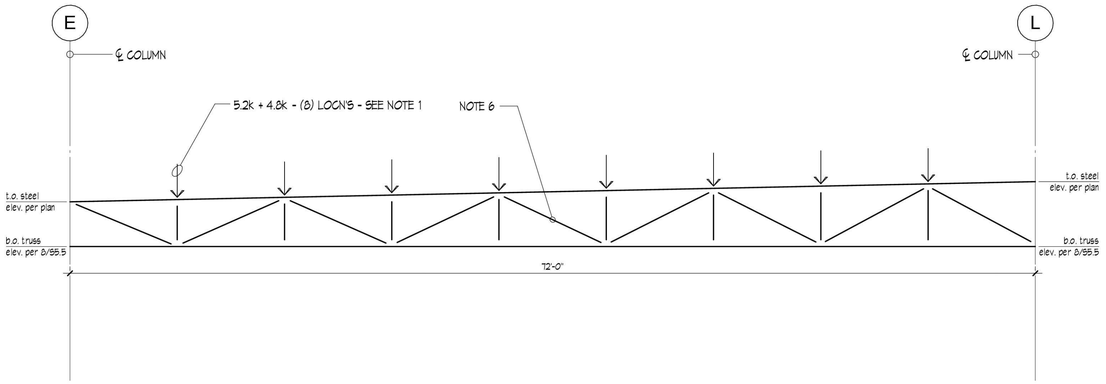

STEEL JOIST GIRDER LOADING DIAGRAMS

NOTES:

1. POINT LOADS = DEAD LOAD(k) + SNOW LOAD(k) ALLOWABLE.
2. 152 PLF (ALLOWABLE) NET WIND UPLIFT LOAD OCCURS ON JOIST GIRDER. BOTTOM CHORD BRACES SHALL BE DESIGNED AND FURNISHED BY THE JOIST GIRDER MANUFACTURER. GENERAL CONTRACTOR SHOULD COORDINATE LOCATIONS WITH MECHANICAL CONTRACTOR AND JOIST GIRDER MANUFACTURER.
3. MAXIMUM TOTAL LOAD DEFLECTION = L/240, SNOW LOAD DEFLECTION = L/360
4. CONTRACTOR SHALL VERIFY ALL DIMENSIONS W/ ARCH'L DRAWINGS.
5. SEE GENERAL STRUCTURAL NOTES FOR OTHER REQUIREMENTS. GENERAL CONTRACTOR, STEEL JOIST MANUFACTURER, AND MECHANICAL CONTRACTOR SHALL COORDINATE DESIGN LOADS AND SUPPORT CONFIGURATIONS FOR ALL HUNG MECHANICAL ITEMS INCLUDING PIPING.
6. NOTE TRUSS CONFIGURATION SHOWN FOR ILLUSTRATION ONLY. PROVIDE TRUSS CONFIGURATION PER STEEL JOIST MFR'S DESIGN.

3/16" = 1'-0" 5801

5

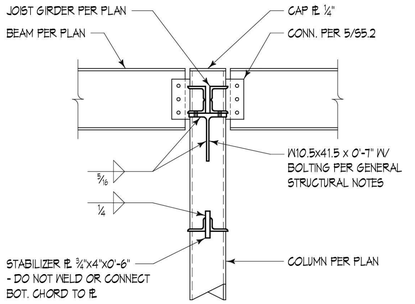

5856

6

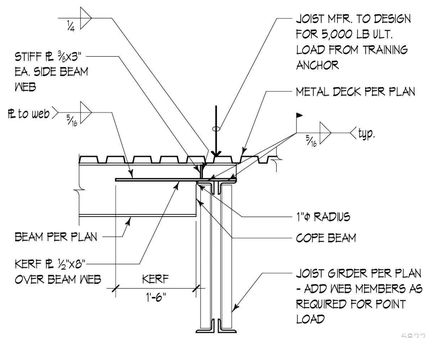

5822

7

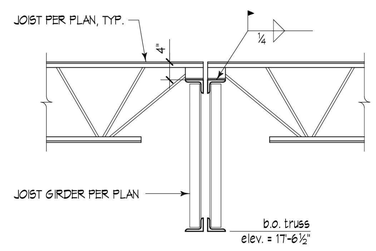

5819

8

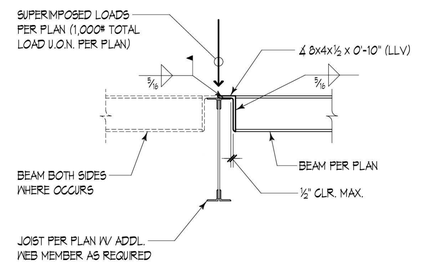

5303

9

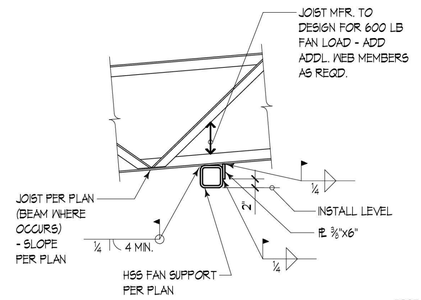

5807

10

11

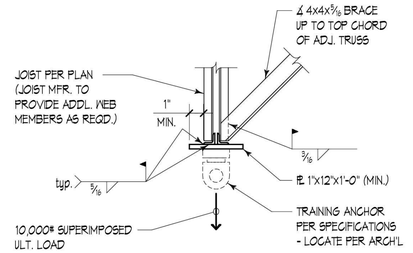

JOIST CONDITION

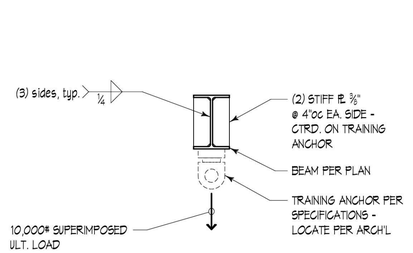

WF CONDITION

5820

Training Anchor Support 13

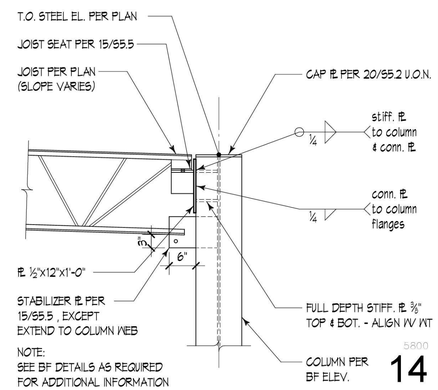

NOTE:
SEE BF DETAILS AS REQUIRED FOR ADDITIONAL INFORMATION

5800

14

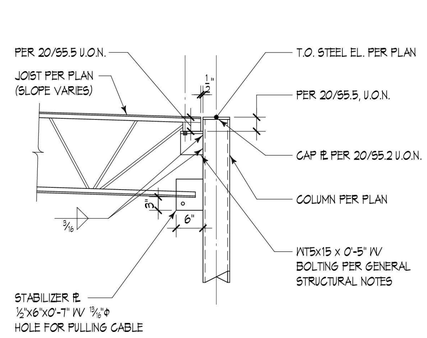

5052

15

16

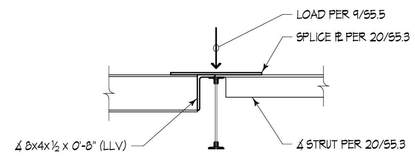

FOR CALL-OUTS IN COMMON SEE DETAIL 9/S5.5

5851

17

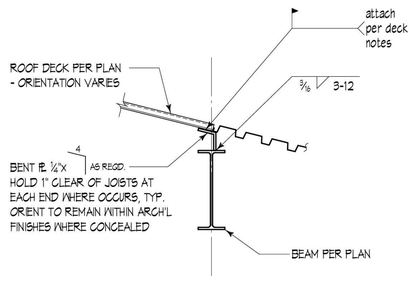

NOTE:
FILLER PL REQUIRED FOR BRACED FRAME BEAMS AND MEMBERS DENOTED "STRUT" PER PLAN AND ONLY FOR THOSE HELD DOWN AS SHOWN FOR JOIST SUPPORT. FILLER PL ALSO REQUIRED WHERE DECK ORIENTATION CHANGES OR WHERE SPECIFIED ON DETAILS.

5060

18

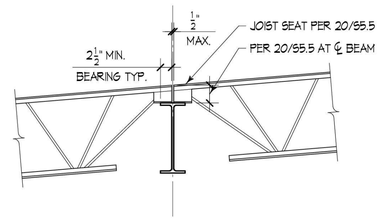

5842

19

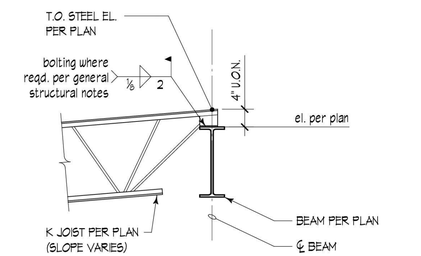

NOTES:
1. INSTALL BENT PL BETWEEN JOISTS WHERE REQUIRED PER 18/S5.5 .

5053

20

COUGHLIN PORTER LUNDEEN

801 SECOND AVENUE, SUITE 900
SEATTLE, WA 98104

(206) 343-0460 www.cplinc.com

MICHAEL A ARMSTRONG — STATE OF WASHINGTON — 37839 — STRUCTURAL ENGINEER — PROFESSIONAL ENGINEER

01/20/20

BID SET

No.	Description	Date:

Project Title:

Fire Station 24

City of Kirkland
Kirkland, Washington

Sheet Title:

JOIST DETAILS

Scale: 3/4" = 1'-0"
Project No. : S19-0211-03
Date : 12/02/19

Sheet Number :

S5.5

C:\Revit Local\2019\KFS24_Structural_nickr9LRV7.rvt

Provided to Builders Exchange of WA, Inc. For usage Conditions Agreement see www.bxwa.com - Always Verify Scal

1

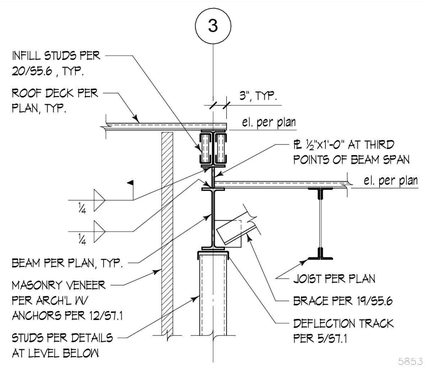

5853

2

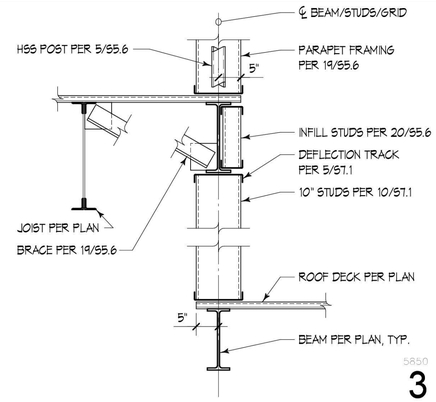

5850

3

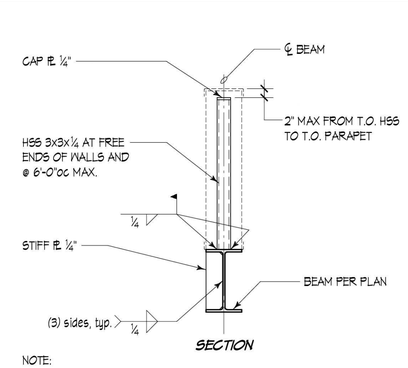

SECTION

NOTE:
OMIT HSS WHERE PARAPET HEIGHT IS LESS THAN 12" ABOVE TOP OF BEAM

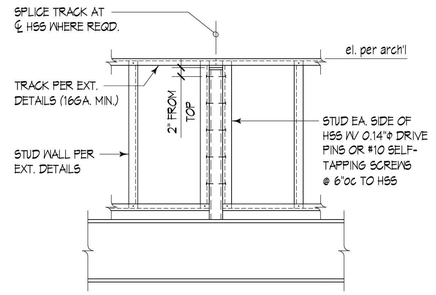

ELEVATION

5067

5

6

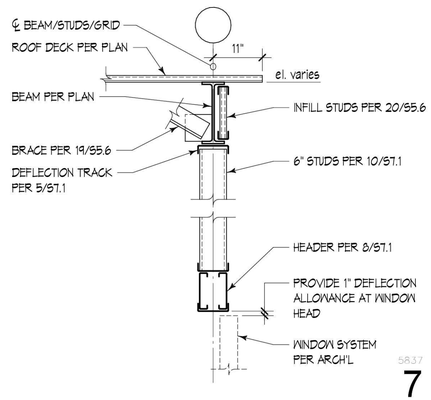

5837

7

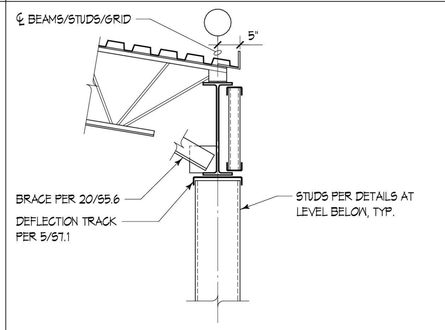

FOR CALL-OUTS IN COMMON SEE DETAIL 9/S5.6

5831

8

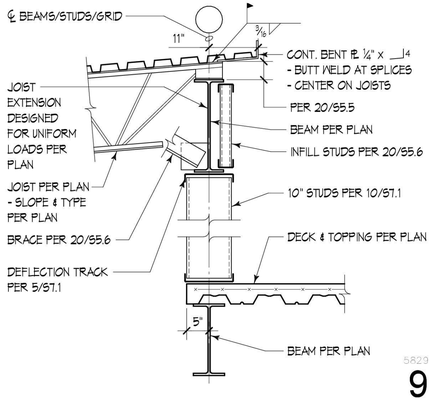

5829

9

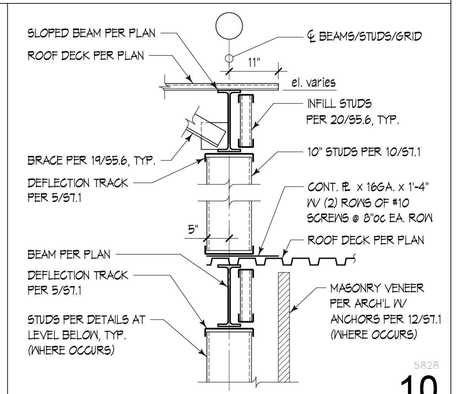

5828

10

11

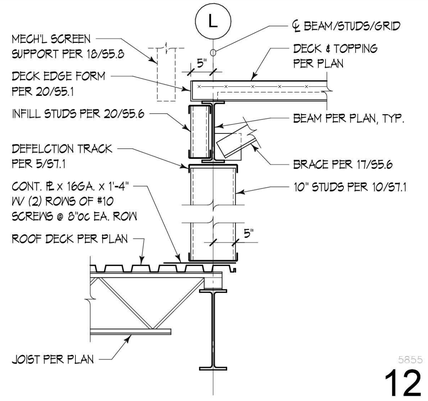

5855

12

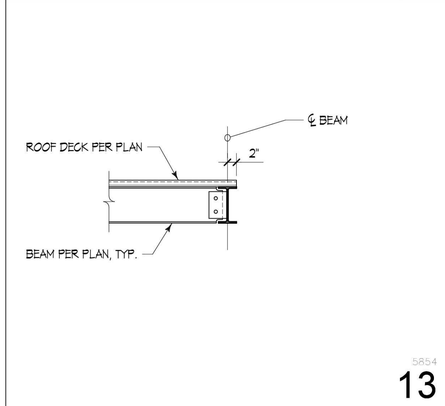

5854

13

14

15

16

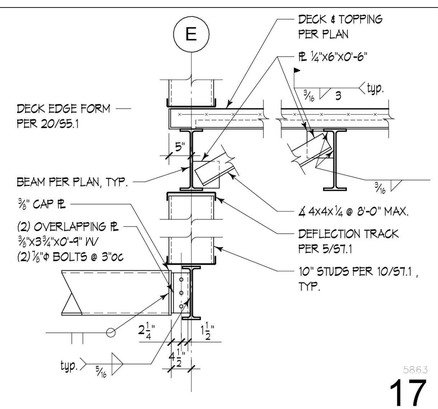

5863

17

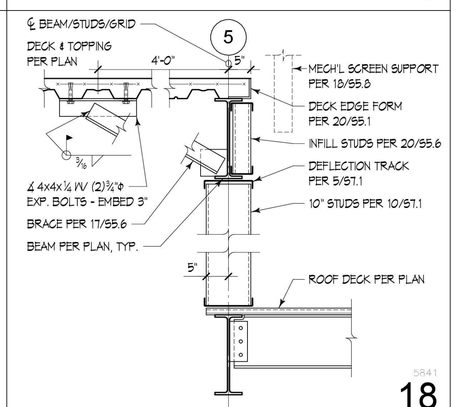

5841

18

NOTE:
INSTALL BENT fl. BETWEEN JOISTS WHERE REQUIRED PER 18/S5.5.

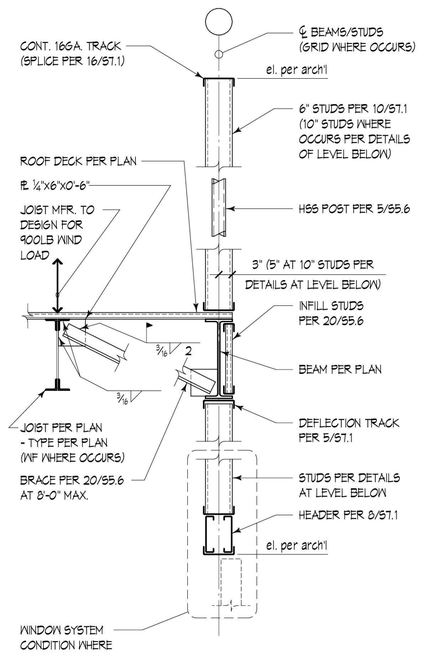

5818

19

NOTE:
INSTALL BENT fl. BETWEEN JOISTS WHERE REQUIRED PER 18/S5.5.

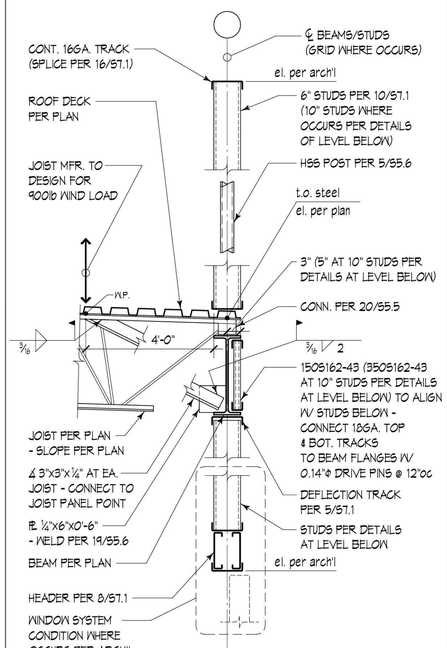

5817

20

COUGHLIN PORTER LUNDEEN

801 SECOND AVENUE, SUITE 900
SEATTLE, WA 98104

(206) 343-0460 www.cplinc.com

MICHAEL A ARMSTRONG
STATE OF WASHINGTON
37839
STRUCTURAL ENGINEER
PROFESSIONAL ENGINEER
01/20/20

BID SET

No.	Description	Date:

Project Title:

Fire Station 24

City of Kirkland
Kirkland, Washington

Sheet Title:

ROOF FRAMING DETAILS

Scale: 3/4" = 1'-0"
Project No. : S19-0211-03
Date : 12/02/19

Sheet Number :

S5.6

C:\Revit Local\2019\KFS24_Structural_nickr9LRV7.rvt

Provided to Builders Exchange of WA, Inc. For usage Conditions Agreement see www.bxwa.com - Always Verify Scal

1

2

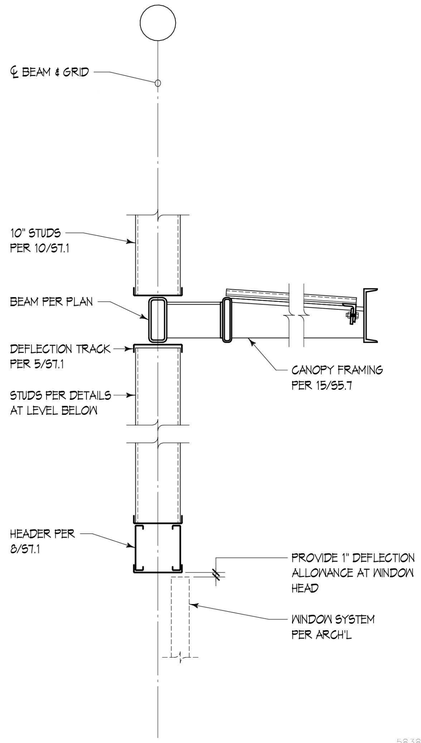

5838

8

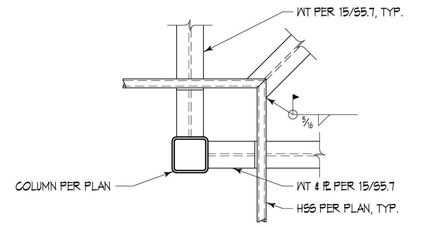

FOR CALL-OUTS IN COMMON SEE DETAIL 15/S5.7

PLAN

5840

4

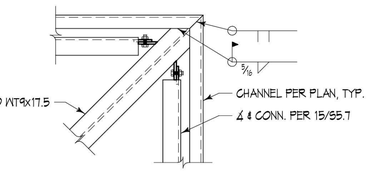

PLAN

5839

5

6

7

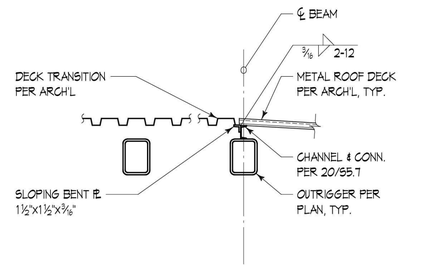

5861

9

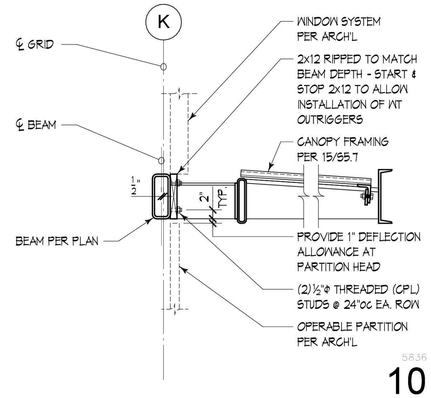

5836

10

11

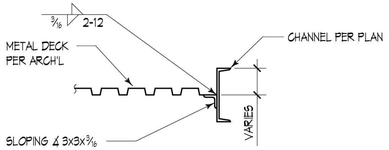

5847

12

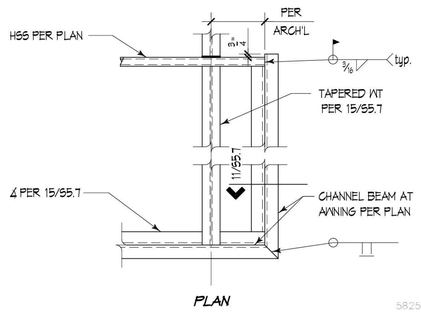

PLAN

5825

13

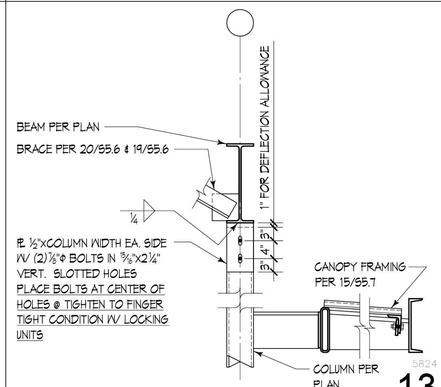

5824

14

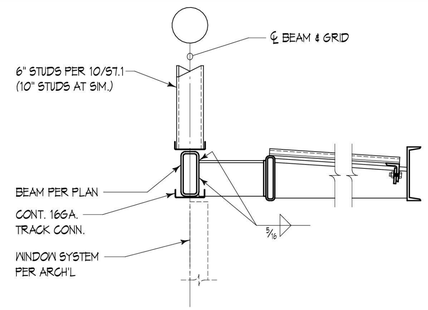

FOR CALL-OUTS IN COMMON SEE DETAIL 15/S5.7

5826

15

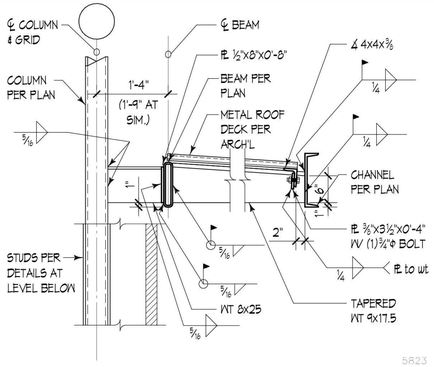

5823

16

17

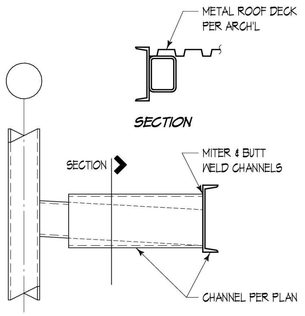

FOR CALL-OUTS IN COMMON SEE DETAIL 20/S5.7

PLAN

5832

18

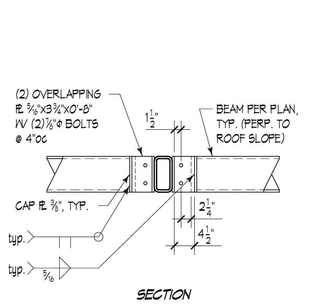

SECTION

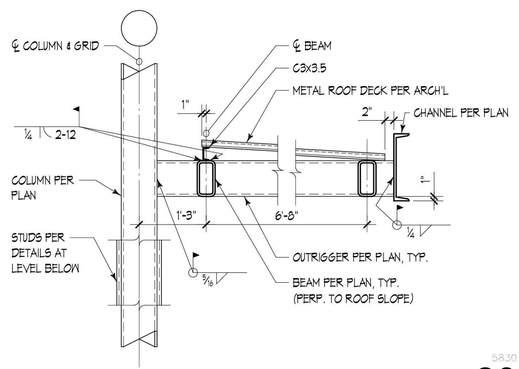

5830

20

COUGHLIN PORTER LUNDEEN

801 SECOND AVENUE, SUITE 900
SEATTLE, WA 98104

(206) 343-0460 www.cplinc.com

MICHAEL A ARMSTRONG
STATE OF WASHINGTON
37839
STRUCTURAL ENGINEER
PROFESSIONAL ENGINEER
07/20/20

BID SET

No.	Description	Date:

Project Title:

Fire Station 24

City of Kirkland
Kirkland, Washington

Sheet Title:

CANOPY STEEL DETAILS

Scale: 3/4" = 1'-0"
Project No. : S19-0211-03
Date : 12/02/19

Sheet Number :

S5.7

C:\Revit Local\2019\KFS24_Structural_nickr9LRV7.rvt

Provided to Builders Exchange of WA, Inc. For usage Conditions Agreement see www.bxwa.com - Always Verify Scal

1

2

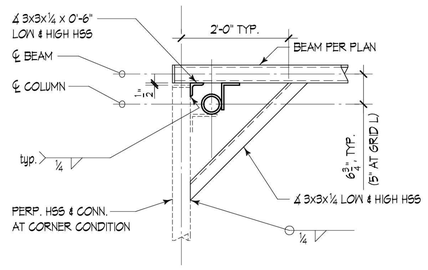

END/CORNER CONDITION
(SEE TYP. CONDITION FOR CALL-OUTS IN COMMON)

4

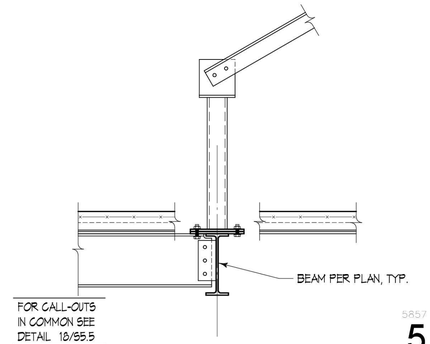

FOR CALL-OUTS IN COMMON SEE DETAIL 18/S5.5

5857

5

6

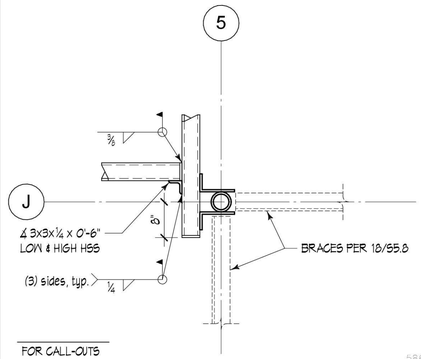

FOR CALL-OUTS IN COMMON SEE DETAIL 8/S5.8

PLAN

5864

7

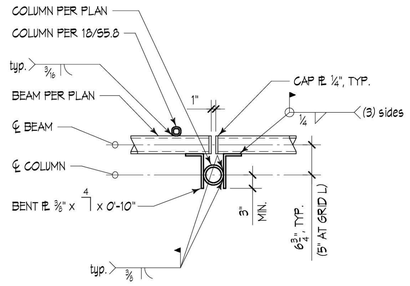

TYPICAL CONDITION

NOTE:
ALL STEEL COMPONENTS AT MECH'L SCREEN SHALL BE HOT DIPPED GALVANIZED, U.O.N.

5808

8

9

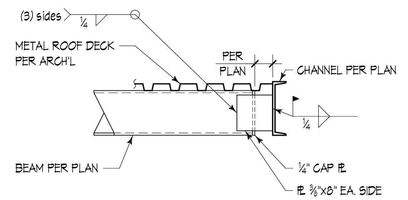

5849

10

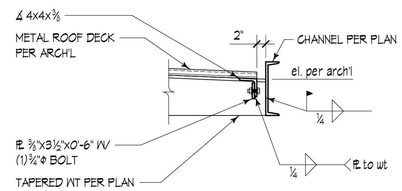

5844

11

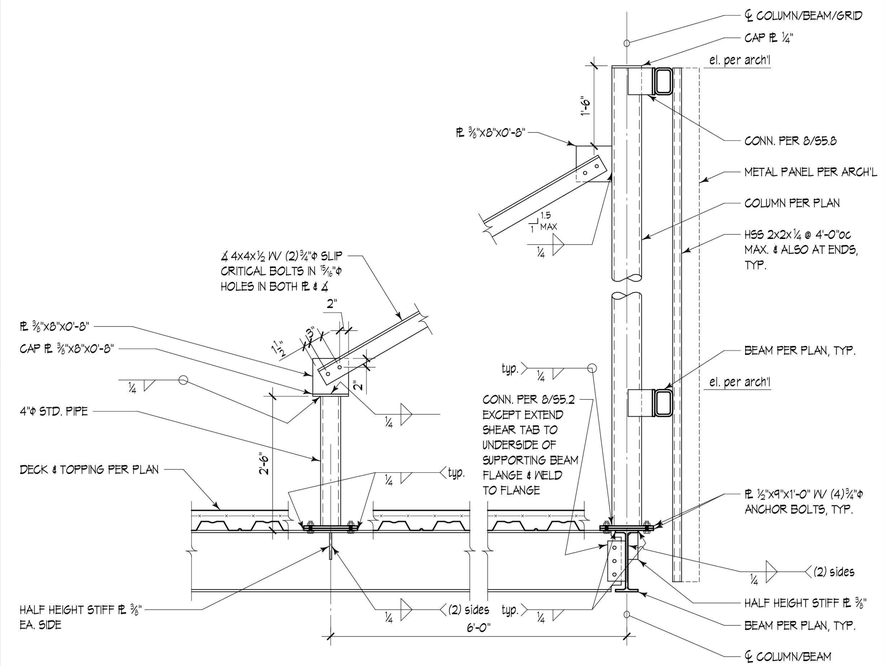

NOTE:
ALL STEEL COMPONENTS AT MECH'L SCREEN WALL SHALL BE HOT DIPPED GALVANIZED, U.O.N.

5806

18

14

NOTE:
DETAIL APPLIES WHERE TAPERED WT BEARS ON CMU WALL BELOW.

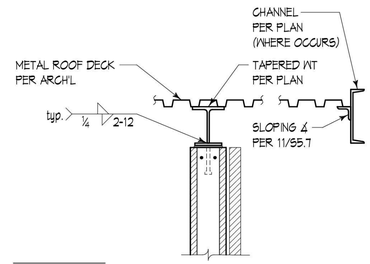

FOR CALL-OUTS IN COMMON SEE DETAIL 20/S5.6

5846

15

19

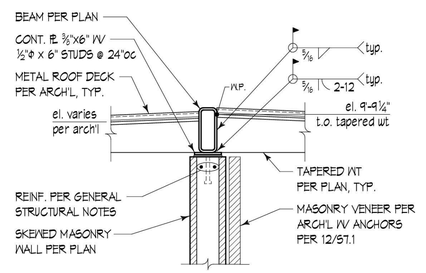

5845

20

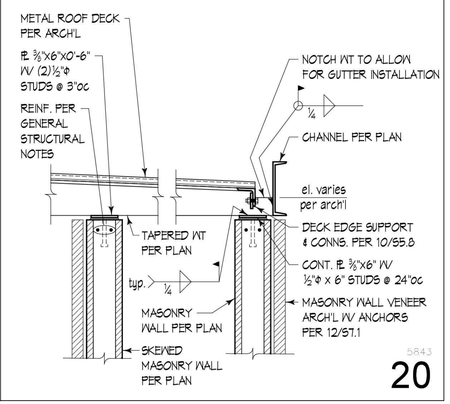

5843

16

C:\Revit Local\2019\KFS24_Structural_nickr9LRV7.rvt

Provided to Builders Exchange of WA, Inc. For usage Conditions Agreement see www.bxwa.com - Always Verify Scal

COUGHLIN PORTER LUNDEEN

801 SECOND AVENUE, SUITE 900
SEATTLE, WA 98104

(206) 343-0460 www.cplinc.com

MICHAEL A ARMSTRONG · STATE OF WASHINGTON · 37839 · STRUCTURAL ENGINEER · PROFESSIONAL ENGINEER
07/20/20

BID SET

No.	Description	Date:

Project Title:

Fire Station 24

City of Kirkland
Kirkland, Washington

Sheet Title:

MISC. STEEL DETAILS

Scale: 3/4" = 1'-0"
Project No. : S19-0211-03
Date : 05/22/20

Sheet Number :

S5.8

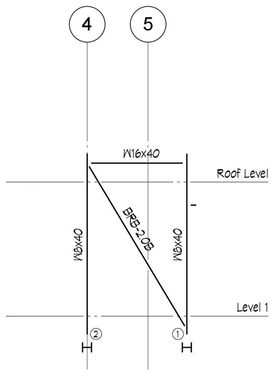

BF-1

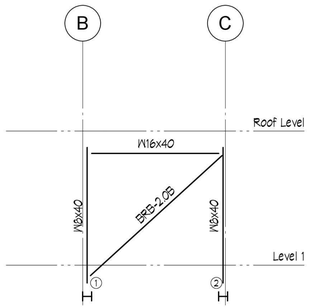

BF-2

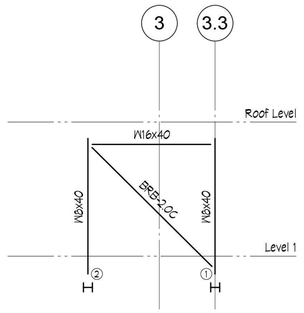

BF-3

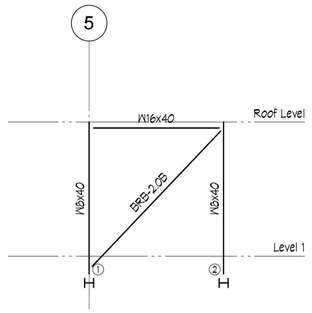

BF-4

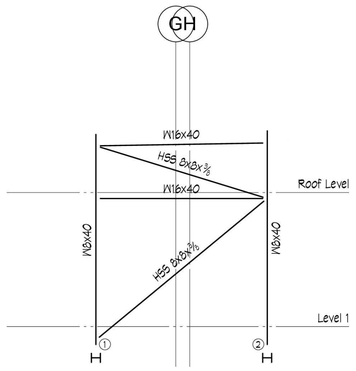

BF-5

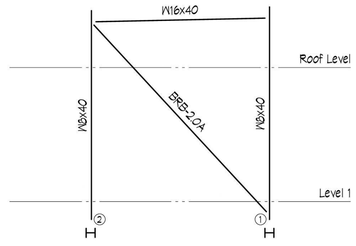

BF-6

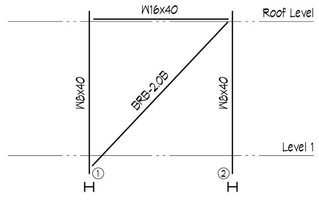

BF-7

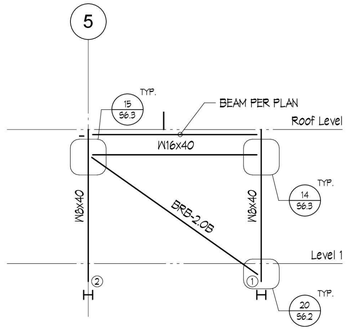

BF-8

SEE 5/S6.3 FOR PROTECTED ZONES AT BRACED FRAMES

ALL BEAMS ON BRACED FRAME ELEVATION ARE "STRUTS"

LEGEND:

BRB-xx	BRACE MARK PER SCHEDULE OF 10/S6.2
(x)	NUMBER OF SHEAR STUDS PER 14/S5.1 & 15/S5.1
(X)	BASE PLATE CONFIGURATION PER 15/S6.2

COUGHLIN PORTER LUNDEEN

801 SECOND AVENUE, SUITE 900
SEATTLE, WA 98104

(206) 343-0460 www.cplinc.com

MICHAEL A ARMSTRONG
STATE OF WASHINGTON
37839
STRUCTURAL ENGINEER
PROFESSIONAL ENGINEER
01/20/20

BID SET

No.	Description	Date:

Project Title:

Fire Station 24

City of Kirkland
Kirkland, Washington

Sheet Title:

BRACED FRAME ELEVATIONS

Scale: 1/8" = 1'-0"

Project No. : S19-0211-03

Date : 12/02/19

Sheet Number :

S6.1

C:\Revit Local\2019\KFS24_Structural_nickr9LRV7.rvt

Provided to Builders Exchange of WA, Inc. For usage Conditions Agreement see www.bxwa.com - Always Verify Scal

1

6

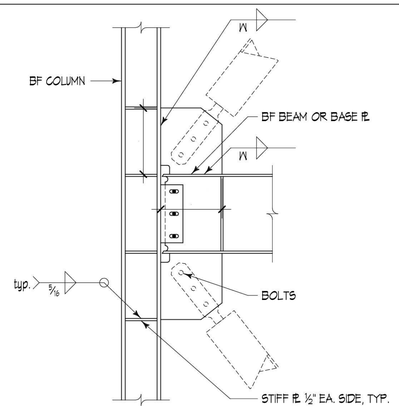

TYPICAL GUSSET PLATE CONNECTION

NOTES

1. t_g = THICKNESS OF GUSSET PL
2. FOR BIDDING PURPOSES ASSUME GUSSET PL MATERIAL WILL BE ASTM A572 W YIELD STRENGTH OF 50 ksi.
3. GUSSET SHAPES AND SIZES SHOWN ARE DIAGRAMATIC ONLY AND NOT INTEDED TO BE THE FINAL DESIGN. FINAL GUSSET PL DESIGN WILL WILL VARY FROM THAT SHOWN AND IS TO BE PROVIDED BY BRB FABRICATOR PER GENERAL STRUCTURAL NOTES AND SPECIFICATIONS.
4. ASSUME (6)1⅛"ϕ A490 BOLTS AT EA. CONNECTION.

BRACED FRAME	LEVEL	BRACE QUANTITY	GUSSET INFO AT LOWER END OF BRB				GUSSET INFO AT UPPER END OF BRB			
			t_g (in.)	W (in.)	L_b (in.)	L_c (in.)	t_g (in.)	W (in.)	L_b (in.)	L_c (in.)
BF-1	L1-ROOF	1	½	⅜	9	21	½	⅜	9	13
BF-2	L1-ROOF	1	½	⅜	10	13	½	⅜	16	10
BF-3	L1-ROOF	1	½	⅜	10	13	½	⅜	15	10
BF-4	L1- MECH'L ROOF	1	½	⅜	10	15	½	⅜	12	10
BF-5	MECH'L ROOF - APPARATUS BAY ROOF	1	¾	½	39	10	¾	½	34	8
BF-5	L1-MECH'L ROOF	1	¾	½	11	14	¾	½	16	11
BF-6	L1-ROOF	1	½	⅜	10	14	½	⅜	13	10
BF-7	L1-ROOF	1	½	⅜	10	14	½	⅜	16	12
BF-8	L1-ROOF	1	½	⅜	10	10	½	⅜	20	9

5070

BRB Gusset Schedule - For Bidding Purposes Only 8

BUCKLING RESTRAINED BRACE (BRB) SCHEDULE					
BRACE MARK	BRACE AREA (Asc, in^2)	STIFFNESS MODIFICATION FACTOR (KF)	COMPRESSION STRENGTH ADJUSTMENT FACTOR (β)	STRAIN HARDENING ADJUSTMENT FACTOR (ω)	MAX CASING SIZE
BRB-2.0A	2.0	1.15	1.14	1.32	HSS 8x8
BRB-2.0B	2.0	1.25	1.15	1.37	HSS 8x8
BRB-2.0C	2.0	1.30	1.15	1.38	HSS 8x8
BRB-2.5A	2.5	1.90	1.18	1.47	HSS 8x8
BRB-2.5B	2.5	1.30	1.16	1.39	HSS 8x8

BUCKLING RESTRAINED BRACE (BRB) NOTES:

1. BRB MFR SHALL USE BOLTED CONNECTIONS FOR ALL BRACE-TO-GUSSET CONNECTIONS, U.O.N.
2. YIELD STRENGTH OF STEEL CORE, F_{ysc}, SHALL BE BETWEEN 38 ksi AND 46 ksi, U.O.N. YIELD STRESS SHALL BE DETERMINED BY COUPON TESTING, WHICH SHALL BE SUBMITTED TO ENGINEER OF RECORD IN ACCORDANCE WITH SPECIFICATIONS. CHARPY V-NOTCH TESTING IN ACCORDANCE WITH AISC 341-10 IS REQUIRED WHERE CORE MATERIAL THICKNESS EXCEEDS 2".
3. BRB MFR, SHALL VERIFY THAT MANUFACTURED BRACES MEET THE STIFFNESS MODIFICATION FACTORS, KF, INDIDATED IN THE SCHEDULE ABOVE, WITH AN ACCEPTABLE TOLERANCE OF +/- 10%. THE KF FACTOR IS BASED OF THE FOLLOWING EQUATION: Keff = (KF x Asc x E)/(Lwp-wp) WHERE Keff IS THE TOTAL EFFECTIVE BRACE STIFFNESS, AND Lwp-wp REPRESENTS THE WORK POINT TO WORK POINT LENGTH OF THE BRACE.
4. BRACE STRENGTH ADJUSTMENT FACTORS, ω AND $\beta\omega$ PER AISC 341-10, SHALL NOT EXCEED +5% OF THE VALUES IN THE SCHEDULE ABOVE, U.O.N.
5. BRB MANUFACTURER SHALL DESIGN ALL BRACE GUSSET CONNECTIONS IN ACCORDANCE WITH AISC 360-10 AND 341-10, AS WELL AS REQUIREMENTS SHOWN IN DETAILS AND SPECIFICATIONS. DESIGN SHALL INCLUDE EVALUATION OF BEAM AND COLUMN WEBS FOR LOCAL YIELDING AND CRIPPLING, AS APPROPRIATE, AND SHALL INCLUDE THE DESIGN AND SPECIFICATION OF REINFORCING PLATES, IF NEEDED.
6. BRACES SHALL BE DESIGNED, TESTED, AND DETAILED TO ACCOMMODATE EXPECTED DEFORMATIONS BASED ON THE GREATER OF 2% OF THE STORY HEIGHT OR 2 TIMES THE DESIGN STORY DRIFT. REFER TO GENERAL STRUCTURAL NOTES AND SPECIFICATIONS FOR DESIGN STORY DRIFTS.
7. BUCKLING RESTRAINED BRACES SHALL MEET THE CYCLIC TEST REQUIREMENTS OF AISC 341-10 CHAPTER K. BRB MFR SHALL SUBMIT REPORT TO ENGINEER OF RECORD DEMONSTRATING CONFORMANCE IN ACCORDANCE WITH SPECIFICATIONS.
8. REFER TO S/S6.2 FOR APPROXIMATE GUSSET PLATES SIZES TO BE USED FOR BIDDING PURPOSES ONLY.

5099

BRB Schedule and Notes 10

11

12

13

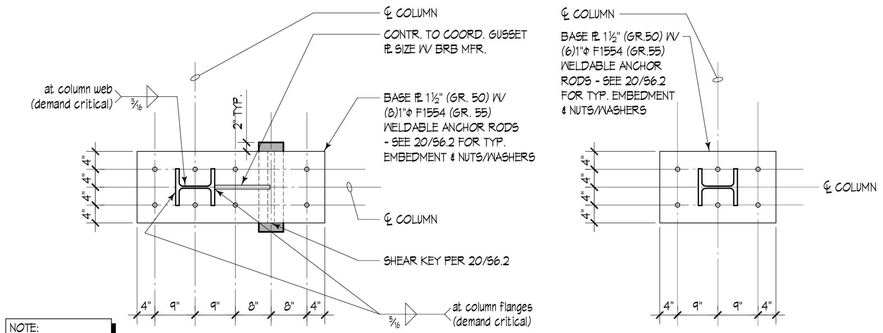

NOTE:
SEE 20/S6.2 FOR TYP. EMBEDMENT & NUTS/WASHERS

5086

NOTE: REFER TO CONDITION 1 FOR CALL-OUTS IN COMMON. 15

16

17

18

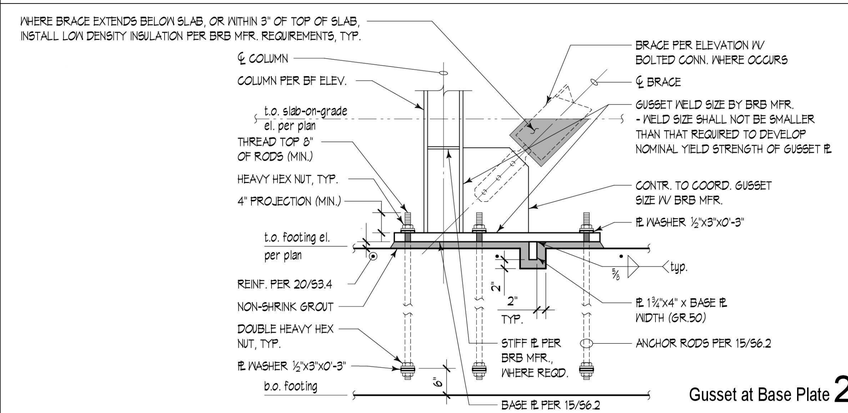

5090

Gusset at Base Plate 20

COUGHLIN PORTER LUNDEEN

801 SECOND AVENUE, SUITE 900
SEATTLE, WA 98104

(206) 343-0460 www.cplinc.com

MICHAEL A ARMSTRONG STATE OF WASHINGTON 37839 STRUCTURAL ENGINEER PROFESSIONAL ENGINEER

01/20/20

BID SET

No.	Description	Date:

Project Title:

Fire Station 24

City of Kirkland
Kirkland, Washington

Sheet Title:

BRACED FRAME DETAILS

Scale: 3/4" = 1'-0"

Project No. : S19-0211-03

Date : 12/02/19

Sheet Number :

S6.2

C:\Revit Local\2019\KFS24_Structural_nickr9LRV7.rvt

Provided to Builders Exchange of WA, Inc. For usage Conditions Agreement see www.bxwa.com - Always Verify Scal

1

2

3

4

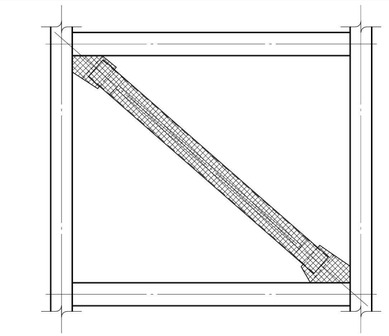

HATCHED AREAS INDICATE PROTECTED ZONE.
WELDED, BOLTED, SCREWED, DRIVE PINNED OR OTHER CONNECTIONS ARE NOT PERMITTED IN PROTECTED ZONES (EXCEPT ARC SPOT WELDS OF 1/ST.1)

N.T.S.

5091

5

6

7

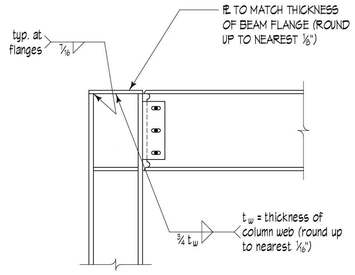

CONNECTION AT TOP OF COLUMN
(SEE TYPICAL CONDITION FOR CALL-OUTS IN COMMON)

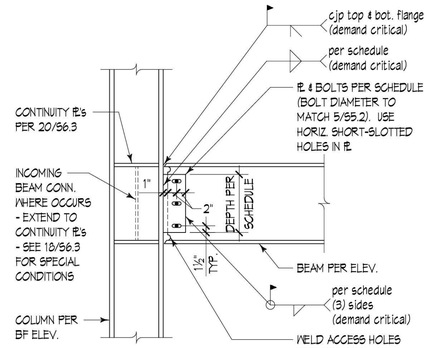

TYPICAL STRONG AXIS CONNECTION

NOTES:
1. ALL WELDING SHOWN THIS DETAIL SHALL CONFORM TO AWS D1.8 CHAPTER 6 AND ANSI/AISC 358-10 CHAPTER 3, WITH THE FOLLOWING ADDITIONAL REQUIREMENTS.
2. WELD ACCESS HOLES SHALL CONFORM TO AWS D1.8 SECTION 6.10.1.2 AND SECTION 6.10.2
3. STEEL BACKING BARS AT BEAM BOTTOM FLANGE WELD SHALL BE REMOVED, BACKGOUGED, AND BACKWELDED PER ANSI/AISC 358-10 SECTION 3.3.2.
4. STEEL BACKING BARS AT BEAM TOP FLANGE WELD MAY BE LEFT IN PLACE PROVIDED THAT THE BACKING BAR IS WELDED TO THE COLUMN ON THE UNDERSIDE WITH A 5/16" FILLET WELD.

SHEAR PL CONNECTION SCHEDULE

BEAM SIZE	PL DEPTH	PL THICKNESS (GR. 50)	PL TO COLUMN WELD SIZE	PL TO BEAM WELD SIZE	NO. OF BOLTS (EQUALLY SPACED)
W16	11"	¾"	½"	5/16"	3

5085

14

NOTE:
PROTECTED ZONES SHALL BE PERMANENTLY MARKED BY FABRICATOR. IF MARKINGS ARE OBSCURED IN THE FIELD, PROTECTED ZONES SHALL BE RE-MARKED.

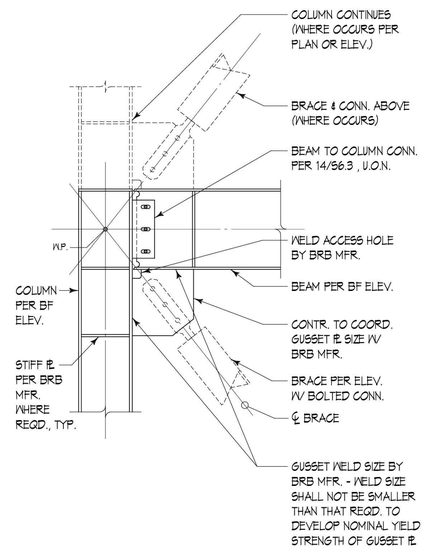

5093

Gusset at Beam to Column 15

11

12

16

17

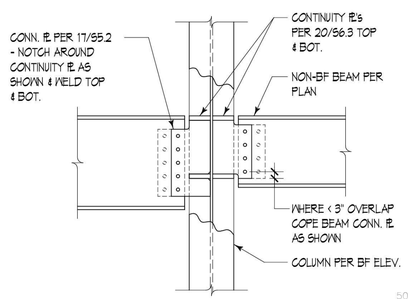

5038

18

CONTINUITY PL NOTES:
1. AT STRONG AXIS CONN. CONTINUITY PL THICKNESS SHALL BE ¾ OF THE BEAM FLANGE THICKNESS, ROUNDED UP TO THE NEAREST ⅛ OF AN INCH. WHERE BEAMS FRAME INTO OPPOSITE SIDES OF THE COLUMN OR AT ALL WEAK AXIS CONN., THE CONTINUITY PL THICKNESS SHALL EQUAL THE THICKNESS OF THE THICKER BEAM FLANGE, ROUNDED UP TO THE NEAREST ⅛ OF AN INCH.
2. CONTINUITY PL'S MAY BE OMITTED AT STRONG AXIS CONDITIONS WHERE COLUMN FLANGE THICKNESS MEETS OR EXCEEDS TWICE THE BEAM FLANGE THICKNESS.
3. WHERE BRACED FRAME BEAMS FRAME INTO BOTH STRONG AND WEAK AXIS OF THE SAME COLUMN, THE FOLLOWING SHALL APPLY: WHERE NOMINAL BEAM DEPTHS ARE THE SAME, USE SIZE AND LOCATION OF PL'S BASED ON THE WEAK AXIS CONDITION; WHERE NOMINAL BEAM DEPTHS DIFFER, PROVIDE SEPARATE CONTINUITY PLATES FOR BOTH STRONG AND WEAK AXIS CONDITIONS.
4. FILLET WELDS BETWEEN CONTINUITY PL AND COLUMN SHALL BE HELD BACK ONE WELD SIZE ADJACENT TO THE K AND K1 ZONES OF THE COLUMN.

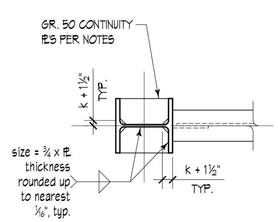

5084

20

COUGHLIN
PORTER
LUNDEEN

801 SECOND AVENUE, SUITE 900
SEATTLE, WA 98104

(206) 343-0460 www.cplinc.com

MICHAEL A ARMSTRONG
STATE OF WASHINGTON
37839
STRUCTURAL ENGINEER
PROFESSIONAL ENGINEER
01/20/20

BID SET

No.	Description	Date:

Project Title:

Fire Station 24

City of Kirkland
Kirkland, Washington

Sheet Title:

BRACED FRAME DETAILS

Scale: 3/4" = 1'-0"
Project No. : S19-0211-03
Date : 12/02/19

Sheet Number :

S6.3

C:\Revit Local\2019\KFS24_Structural_nicke9LRV7.rvt

Provided to Builders Exchange of WA, Inc. For usage Conditions Agreement see www.bxwa.com - Always Verify Scal

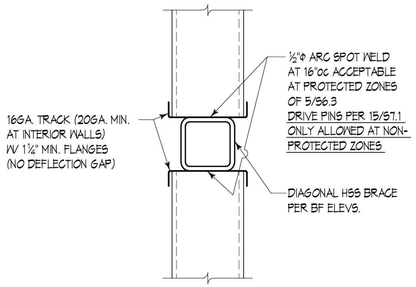

TYPICAL INTERIOR OR EXTERIOR STUD WALL TO BRACED FRAME BRACE CONNECTION DETAIL

7009

Typ. Conn. at BF Braces **1**

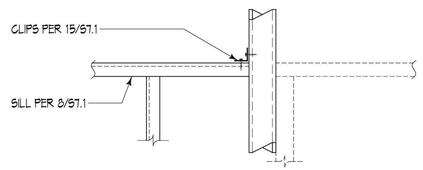

SILL CONN. AT STEEL COLUMNS

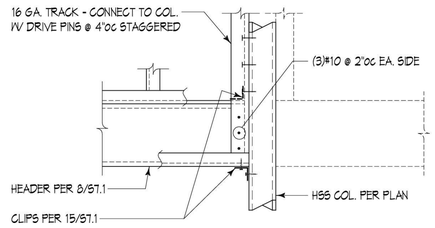

HEADER CONN. AT STEEL COLUMNS

7008

Header Conn's to HSS Cols **3**

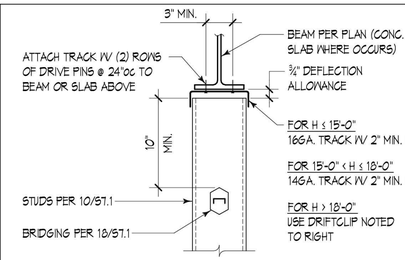

TYP. 6" STUDS

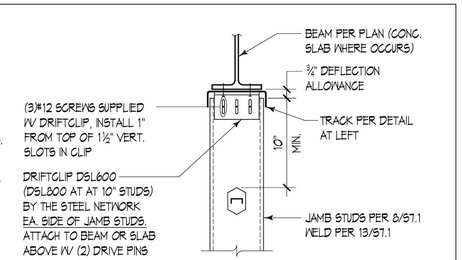

10" WALL STUDS & JAMB STUDS

NOTES:

1. CONNECTIONS SHOWN THIS DETAIL APPLY TO THE TOP OF TYPICAL SIMPLE SPANNING WALL STUDS WHERE DEFLECTION ALLOWANCE OCCURS.

7007

1 1/2" = 1'-0"

Typical Exterior Stud Head Conn's **5**

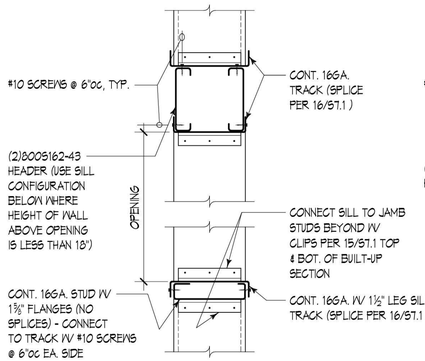

HEADER B SECTION

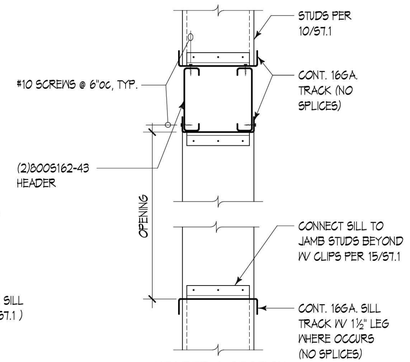

HEADER A SECTION

SPAN "L" CONDITION	HEADER TYPE	NO. OF FULL HEIGHT JAMB STUDS U.O.N. PER PLAN
L ≤ 9'-0"	A	2
9'-0" < L ≤ 15'-0"	B	3

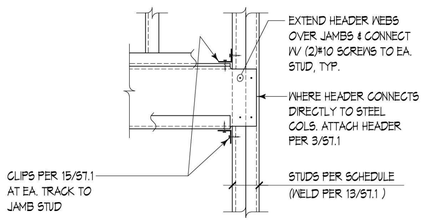

TYP. JAMB CONNECTION
(SEE 3/ST.1 AT STEEL COL.)

7006

Typ. Wind Header Schedule **8**

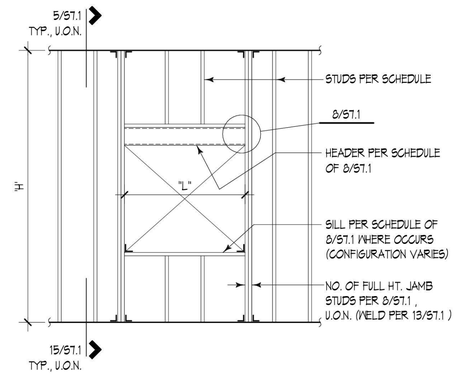

TYPICAL SIMPLE SPANNING STUD WALL SCHEDULE

STUD WIDTH	CLEAR HEIGHT "H"	STUD WALL TYPE PER 20/ST.1 , U.O.N.
6"	H ≤ 15'-0"	S-618
	15'-0" < H ≤ 18'-0"	S-614
10"	H ≤ 24'-0"	S-1016

7001

10

HORIZ. ANCHOR SPACING	MAX. VERT. SPACING OF ANCHORS ①
12"oc	18"oc
16"oc	18"oc
24"oc	12"oc

① PLACE ANCHORS @ 8"oc AT VERT. EDGES OF ALL OPENINGS. ANCHORS SHALL BE LOCATED MAX. 12" FROM EDGE OF OPENING IN PLAN (ADD ADDL. WALL STUDS AS REQD.).

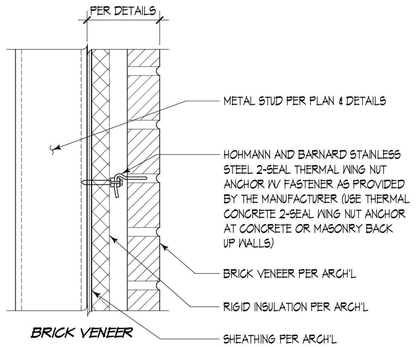

BRICK VENEER

N.T.S.

7800

12

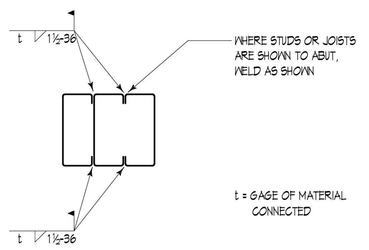

7005

Multiple Stud or Joist Connection **13**

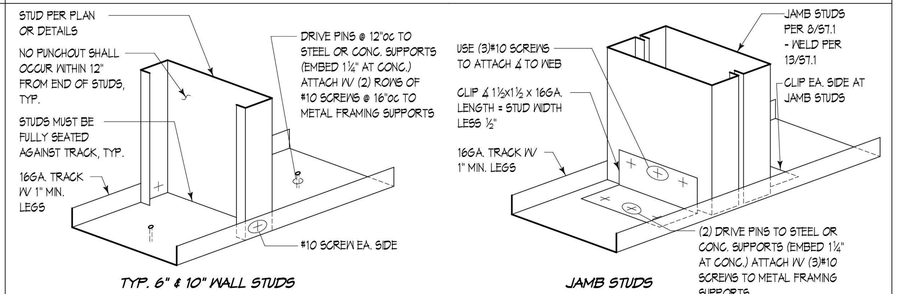

TYP. 6" & 10" WALL STUDS

JAMB STUDS

NOTES:

1. CONNECTIONS SHOWN ON THIS DETAIL APPLY TO THE TOP OR BOTTOM OF TYPICAL SIMPLE SPANNING WALL STUDS SUBJECT TO WIND LOADING. SEE 5/ST.1 FOR CONNECTIONS AT TOP OF WALLS WHERE DEFLECTION ALLOWANCE OCCURS.

7003

Typical Exterior Stud Sill Conn's **15**

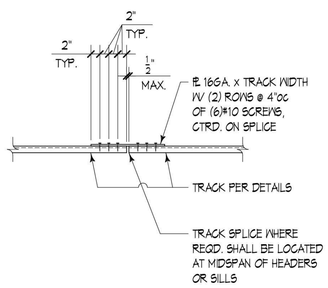

7004

Track Splice **16**

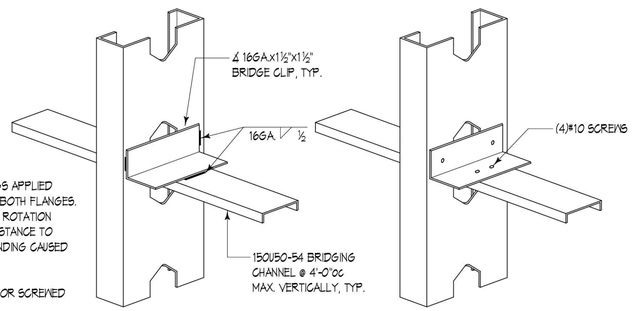

NOTES:

1. BRIDGING IS REQUIRED FOR LOADINGS APPLIED BEFORE SHEATHING IS ATTACHED TO BOTH FLANGES. BRIDGING PROVIDES RESISTANCE TO ROTATION CAUSED BY WIND LOADING, AND RESISTANCE TO BOTH ROTATION AND MINOR AXIS BENDING CAUSED BY AXIAL LOADING.
2. BRIDGING SHALL BE EITHER WELDED OR SCREWED AS SHOWN.

7002

Bridging for Metal Stud Wall **18**

METAL FRAMING NOTES:

1. METAL FRAMING USED SHALL CONFORM TO THE SPECIFICATIONS OUTLINED IN THE GENERAL NOTES IN ADDITION TO REQUIREMENTS NOTED HERE.
2. METAL FRAMING & STRAP BRACING SHALL BE G60 GALVANIZED UNLESS OTHERWISE NOTED, CONFORMING AS FOLLOWS:

   12, 14, AND 16 GAGE — ASTM A653 OR A1003, GRADE 50
   18 AND 20 GAGE — ASTM A653 OR A1003, GRADE 33
3. ALL STUDS & STUD GROUPS SHALL BE LATERALLY SUPPORTED TO PREVENT WEAK AXIS BUCKLING BY CONNECTING EACH FLANGE TO GYPSUM WALLBOARD PER ASTM C1280.
4. WALLS WHICH HAVE SHEATHING CONNECTED ON ONE SIDE ONLY SHALL HAVE UNSHEATHED FLANGES LATERALLY SUPPORTED PER DETAIL 18/ST.1 .
5. TRACK SECTIONS SHALL BE UNPUNCHED AND HAVE AT LEAST 1" FLANGES. USE OF SLOTTED TRACK IS NOT PERMITTED UNLESS SPECIFICALLY APPROVED BY ENGINEER OF RECORD.
6. WELDING OF COLD-FORMED METAL FRAMING SHALL CONFORM TO AWS D1.3 AND SHALL BE PERFORMED BY WELDERS QUALIFIED TO PRODUCE THE SPECIFIED CLASSES OF WELD.
7. WALL FRAMING:
   TWO STUDS MINIMUM SHALL BE PROVIDED AT THE END OF ALL WALLS AND AT EACH SIDE OF ALL OPENINGS. SEE 10/ST.1 FOR WALL SCHEDULE & FRAMING OF OPENINGS, U.O.N.
8. SEE ARCH'L FOR SIZING & DETAILING OF INTERIOR, NON-BEARING WALLS.
9. SEE 1/ST.1 FOR CONNECTION OF STUDS TO INTERIOR OR EXTERIOR BRACED FRAME BRACES.
10. SEE 18/ST.1 FOR REQUIRED BRIDGING.

METAL STUD WALL TYPES:

WALL DESIGNATION	STUD TYPE	SPACING
S-614	600S137-68	16"oc
S-618	600S137-43	16"oc
S-1016	1000S250-54	16"oc

NOTE: SEE PLAN FOR LOCATIONS OF STRUCTURAL STUD GROUPS DESIGNATED <XX> WHICH SUPPORT BEAMS OR JOISTS. WELD STUD GROUPS TOGETHER PER 13/ST.1 .

7000

Metal Framing Notes **20**

COUGHLIN PORTER LUNDEEN

801 SECOND AVENUE, SUITE 900
SEATTLE, WA 98104
(206) 343-0460 www.cplinc.com

MICHAEL A ARMSTRONG — STATE OF WASHINGTON — 37839 — STRUCTURAL ENGINEER — PROFESSIONAL ENGINEER

01/20/20

BID SET

No.	Description	Date:

Project Title:

Fire Station 24

City of Kirkland
Kirkland, Washington

Sheet Title:

TYPICAL METAL STUD DETAILS

Scale: 3/4" = 1'-0"
Project No. : S19-0211-03
Date : 12/02/19

Sheet Number :

S7.1

C:\Revit Local\2019\KFS24_Structural_nickr9LRV7.rvt

Provided to Builders Exchange of WA, Inc. For usage Conditions Agreement see www.bxwa.com - Always Verify Scal

MECHANICAL SYMBOLS LEGEND

HYDRONIC SYSTEM LABELS

- PIPE BREAK (CONTINUATION)
- HYDRONIC SUPPLY
- HYDRONIC RETURN
- DIRECTION OF FLOW
- CAP
- HEAT TRACED PIPING

HYDRONIC VALVES AND SPECIALTIES

- 2-WAY ELECTRIC CONTROL VALVE (F.O. FAIL OPEN / F.C. FAIL CLOSED)
- 3-WAY ELECTRIC CONTROL VALVE
- 4-WAY CONTROL VALVE

DUCTWORK LABELS

- INTERNALLY LINED DUCT
- HIDDEN DUCT
- DUCT (1ST DIMENSION SIDE SHOWN, 2ND DIMENSION OTHER SIDE) — 16X12
- REMOVE DUCT, PIPE OR MECH. EQUIPMENT
- FLEX DUCT
- RECTANGULAR SUPPLY DUCT OUT OF PAGE
- RECTANGULAR SUPPLY DUCT INTO PAGE
- SUPPLY DIFFUSER
- OUTSIDE AIR DIFFUSER
- RECTANGULAR RETURN DUCT OUT OF PAGE
- RECTANGULAR RETURN DUCT INTO PAGE
- RETURN OR EXHAUST GRILLE — OR
- TURNING VANES
- STRAIGHT TAP
- TAPERED FITTING
- BELL MOUTH FITTING
- CONICAL FITTING
- 45 DEG. ANGLE TAP
- ROUND ELBOW OUT OF PAGE
- ROUND ELBOW INTO PAGE
- ROUND DUCT OUT OF PAGE
- ROUND DUCT INTO PAGE
- ROUND DUCT BREAK (CONTINUATION)
- RECTANGULAR DUCT BREAK (CONTINUATION)
- FLEX CONNECTION

REFERENCE SYMBOLS

- DETAIL NUMBER / SHEET — M-1
- FLAG NOTE
- REVISION TAG — 1
- MECHANICAL EQUIPMENT — AHU-1
- DIFFUSER/GRILLE TYPE / CFM — D / 0
- SECTION NUMBER / SHEET NUMBER — 1

LIFE SAFETY SYMBOLS

- CEILING RADIATION DAMPER
- COMBINATION SMOKE/FIRE DAMPER — OR
- HORIZONTAL SMOKE DAMPER
- FIRE DAMPER

CONTROL SYMBOLS

- VOLUME DAMPER
- MOTORIZED CONTROL DAMPER — M
- THERMOSTAT IN DUCT — T
- REMOTE OPERATED VOLUME DAMPER
- BACKDRAFT DAMPER
- PRESSURE INDEPENDENT VOLUME CONTROLLER (TROX VFC)
- PRESSURE INDEPENDENT VOLUME CONTROLLER W/ ACTUATOR (TROX VFC EØ / MØ)
- THERMOSTAT, MOUNT @ 4'-0" A.F.F. — T
- SENSOR — S
- CARBON MONOXIDE DETECTOR WITH FAN INDICATED — CO / GEF-1
- CARBON DIOXIDE DETECTOR — CO2

PIPING SYSTEM LABELS

- NATURAL GAS OR PROPANE — G
- BALL VALVE MANUAL LEVER
- BUTTERFLY VALVE MANUAL LEVER
- BUTTERFLY GEAR VALVE
- GLOBE VALVE MANUAL LEVER
- BALANCE VALVE (CIRCUIT SETTER)
- BALANCE VALVE (PRESSURE INDEPENDENT)
- PIPE TO DRAIN
- PRESSURE SAFETY VALVE
- AUTOMATIC AIR VENT — AAV
- MANUAL AIR VENT — MAV
- WYE STRAINER
- WYE STRAINER WITH VALVE AND HOSE END CAP
- HEAT TRACE PIPING
- HOSE END AND CAP
- EXPANSION LOOP

ABBREVIATIONS

ACT	ACOUSTICAL CEILING TILE
ADA	AMERICANS WITH DISABILITIES ACT
ADJ	ADJUSTABLE
AFF	ABOVE FINISHED FLOOR
AFG	ABOVE FINISHED GRADE
ALT	ALTERNATE
AP	ACCESS PANEL
APPROX	APPROXIMATE
ARCH	ARCHITECTURAL/ARCHITECT
AS	AIR SEPARATOR
AUX	AUXILIARY
BFF	BELOW FINISHED FLOOR
BHP	BRAKE HORSE POWER
BLDG	BUILDING
BOP	BOTTOM OF PIPE
BTU	BRITISH THERMAL UNIT
BTUH	BRITISH THERMAL UNIT PER HOUR
CA	COMBUSTION AIR
CFH	CUBIC FEET PER HOUR
CFM	CUBIC FEET PER MINUTE
CLG	CEILING
CO	CARBON MONOXIDE
CO2	CARBON DIOXIDE
COND	CONDENSATE
CW	COLD WATER
CX	CONNECT TO EXISTING
dB	DECIBEL
DB °F	DRY BULB TEMPERATURE
° OR DEG.	DEGREE
Ø OR DIA	DIAMETER
DN	DOWN
DWG(S)	DRAWING(S)
DWV	DRAIN, WASTE, VENT
EX	EXISTING/EXISTING TO REMAIN
EA	EACH
EA	EXHAUST AIR
EAT	ENTERING AIR TEMPERATURE
ERU	ENERGY RECOVERY UNIT
ESP	EXTERNAL STATIC PRESSURE
ET	EXPANSION TANK
EXP	EXPANSION
FC	FAIL CLOSED
FDSD	FIRE DAMPER SMOKE DAMPER
FF	FINISHED FLOOR
FLA	FULL LOAD AMPS
FO	FAIL OPEN
FP	FIRE PROTECTION
FPM	FEET PER MINUTE
FPS	FEET PER SECOND
FT	FEET/FOOT
FTG	FOOTING
FOIC	FURNISHED BY OWNER INSTALLED BY CONTRACTOR
FOIO	FURNISHED BY OWNER INSTALLED BY OWNER
FSD	FIRE/SMOKE DAMPER
G	NATURAL GAS
GA	GAUGE
GAL	GALLON
GALV	GALVANIZED
G.C.	GENERAL CONTRACTOR
GSM	GALVANIZED SHEET METAL
H	HEIGHT
HD	HEAD
HP	HORSEPOWER
HVAC	HEATING VENTILATING AND AIR CONDITIONING
HW	HOT WATER
HX	HEAT EXCHANGER
HZ	HERTZ
ID	INSIDE DIAMETER/DIMENSION
IN	INCH/INCHES
IN WC	INCHES WATER COLUMN
KW	KILOWATT/KILOWATTS
LAT	LEAVING AIR TEMPERATURE
LBS	POUNDS
LF	LINEAL FOOT
LRA	LOCKED ROTOR AMPS
LTG	LIGHTING
LWT	LEAVING WATER TEMPERATURE
MBH	1000 BRITISH THERMAL UNIT PER HOUR
MED	MEDIUM
MEP	MECHANICAL, ELECTRICAL & PLUMBING
MEZZ	MEZZANINE
MIN	MINIMUM OR MINUTE
MISC	MISCELLANEOUS
N/A	NOT APPLICABLE
NC	NORMALLY CLOSED
NEG	NEGATIVE
NIC	NOT IN CONTRACT
NO	NORMALLY OPEN
NOM	NOMINAL
NPT	NATIONAL PIPE THREAD
NTS	NOT TO SCALE
OA/OSA	OUTSIDE AIR
OBD	OPPOSED BLADE DAMPER
OC	ON CENTER
OD	OUTSIDE DIAMETER
OFCI	OWNER FURNISHED CONTRACTOR INSTALLED
OFOI	OWNER FURNISHED OWNER INSTALLED
ΔP	PRESSURE DIFFERENTIAL
PERF	PERFORATED
Φ OR PH	PHASE
PIVD	PRESSURE INDEPENDENT VOLUME DAMPER
PLBG	PLUMBING
POC	POINT OF CONNECTION
PRV	PRESSURE REDUCING VALVE
PSF	POUNDS PER SQUARE FOOT
PSI	POUNDS PER SQUARE INCH
PSIG	POUNDS PER INCH GAUGE
PTAC	PACKAGE TERMINAL AIR CONDITIONER
QTY	QUANTITY
RA	RETURN AIR
RH	RELATIVE HUMIDITY
RM	ROOM
RPBP	REDUCED PRESSURE BACKFLOW PREVENTER
RPM	REVOLUTIONS PER MINUTE
RLX	RELOCATE EXISTING
RTU	ROOF TOP UNIT
RV	RELIEF VALVE
RX	REMOVE EXISTING
SA	SUPPLY AIR
SD	SMOKE DETECTOR
SF	SQUARE FOOT
S.L.	SOUND LINER
SP	STATIC PRESSURE
SPEC	SPECIFICATION
S/S, OR SS	STAINLESS STEEL
STD	STANDARD
T&P	TEMPERATURE AND PRESSURE RELIEF VALVE
TBD	TO BE DETERMINED
TEMP	TEMPERATURE
TOB	TOP OF BEAM
TOC	TOP OF CONCRETE
TOD	TOP OF DECK
TOJ	TOP OF JOIST
TOS	TOP OF SLAB/TOP OF STEEL
T&P	TEMPERATURE & PRESSURE
TSP	TOTAL STATIC PRESSURE
TYP	TYPICAL
UL	UNDERWRITERS LABORATORY
UNO	UNLESS NOTED OTHERWISE
UTR	UP THROUGH ROOF
V	VOLT
VAV	VARIABLE AIR VOLUME
VERT	VERTICAL
VFD	VARIABLE FREQUENCY DRIVE
VIB	VALVE-IN-BOX
VOL	VOLUME
W/	WITH
W/IN	WITHIN
W/O	WITHOUT
WB °f	WET BULB TEMPERATURE
WC	WATER COLUMN
WPD	WATER PRESSURE DROP
WT	WEIGHT

SIDER + BYERS
MECHANICAL + ELECTRICAL ENGINEERS
192 Nickerson, Suite #300
Seattle, Washington 98109
Phone: 206.285.2966

T C A
ARCHITECTURE + PLANNING + DESIGN
6211 ROOSEVELT WAY NORTHEAST
SEATTLE, WA 98115
tel: (206) 522-3830
fax: (206) 522-2456

BID SET

No.	Description	Date:

Project Title:

FIRE STATION 24

City of Kirkland
Kirkland, Washington

Sheet Title:

COVER SHEET

Scale: 1/8"=1'-0"
Project No. : 18040
Date : JULY 21, 2020

Sheet Number :

M1.0

Provided to Builders Exchange of WA, Inc. For usage Conditions Agreement see www.bxwa.com - Always Verify Scal

COMMISSIONING NOTES

1. BUILDING COMMISSIONING BY A CERTIFIED COMMISSIONING PROFESSIONAL (CCXP), AS HIRED BY THE OWNER, SHALL BE COMPLETED FOR THE MECHANICAL SYSTEMS, SERVICE WATER HEATING SYSTEMS AND ENERGY METERING SYSTEMS ON THIS PROJECT IN ACCORD WITH THE COMMERCIAL ENERGY CODE SECTION C408 AND SPECIFICATION SECTION 230800. THE GOAL OF COMMISSIONING IS TO VERIFY THAT EQUIPMENT, CONTROLS AND THE SEQUENCING OF SUCH OPERATE AS INTENDED. THE COMMISSIONING DOCUMENTATION THAT IS REQUIRED IS THE PROOF OF THIS OPERATION. THE FOLLOWING TASKS ARE REQUIRED FOR COMMISSIONING. SEE SECTIONS 019113, 220800 & 230800 FOR ADDITIONAL REQUIREMENTS.

2. COMMISSIONING PLAN: THE CCXP SHALL DEVELOP A PLAN WHICH OUTLINES THE ORGANIZATION, SCHEDULE, ALLOCATION OF RESOURCES AND DOCUMENTATION REQUIREMENTS OF THE COMMISSIONING PROCESS. ITEMS 1 THROUGH 4 AS SPECIFIED IN WSEC C408.1.2 SHALL BE PREPARED AND SUBMITTED WITH THE MECHANICAL PERMIT. ITEMS 5 THROUGH 8 AS SPECIFIED SHALL BE SUBMITTED TO BUILDING DEPARTMENT PRIOR TO THE FIRST MECHANICAL INSPECTION. ALL ITEMS SHALL BE SUBMITTED WITH THE MECHANICAL SUBMITTALS.

3. PRELIMINARY COMMISSIONING REPORT: COMPLETION OF THE COMMISSIONING TEST PROCEDURES AND RESULTS SHALL BE CERTIFIED BY THE CCXP. REPORT SHALL NOTE DEFICIENCIES FOUND DURING TESTING, CORRECTIVE ACTION TAKEN OR THE ANTICIPATED DATE OF CORRECTION, CONDITIONS UNDER WHICH THE TESTING WAS PERFORMED AND STATUS OF ANY DEFERRED TESTS.
   A. SUBMISSION OF THIS REPORT IS REQUIRED PRIOR TO FINAL MECHANICAL & PLUMBING INSPECTIONS AND CERTIFICATE OF OCCUPANCY.
   B. A COPY OF THIS REPORT SHALL BE MADE AVAILABLE TO THE CODE OFFICIAL.

4. WITHIN 90 DAYS OF RECEIPT OF THE BUILDING CERTIFICATE OF OCCUPANCY, THE PROJECT RECORD DRAWINGS, O&M MANUALS, FINAL BALANCING REPORT, FINAL COMMISSIONING REPORT AND DOCUMENTATION OF COMPLETED OWNER TRAINING SHALL BE SUBMITTED FOR REVIEW.

5. RECORD DRAWINGS: LOCATION AND PERFORMANCE DATA ON EACH PIECE OF INSTALLED EQUIPMENT, AS-INSTALLED CONFIGURATION OF DUCT AND PIPE DISTRIBUTION SYSTEM, INCLUDING SIZES, AND THE TERMINAL AIR AND WATER DESIGN FLOW RATES OF THE ACTUAL INSTALLATION.

6. OPERATION & MAINTENANCE MATERIALS: SUBMIT ALL OF THE FOLLOWING.
   A. EQUIPMENT SIZE, SELECTED OPTIONS, AND REQUIRED MAINTENANCE.
   B. MANUFACTURER'S O&M MANUAL FOR EACH PIECE OF EQUIPMENT.
   C. NAME AND ADDRESS OF SERVICE AGENCY.
   D. CONTROLS MAINTENANCE AND CALIBRATION INFORMATION INCLUDING WIRING DIAGRAMS, SCHEMATICS, RECORD DRAWINGS AND CONTROL SEQUENCES. SETPOINTS SHALL BE PERMANENTLY RECORDED IN THESE DOCUMENTS.
   E. NARRATIVE OF HOW EACH SYSTEM IS INTENDED TO OPERATE.

7. SYSTEM ADJUSTING & BALANCING: ALL HVAC, HYDRONIC AND SERVICE HOT WATER SYSTEMS SHALL BE BALANCED BY A LICENSED CONTRACTOR IN ACCORDANCE WITH ACCEPTED ENGINEERING STANDARDS AND SECTION 230593. FINAL FLOW RATES SHALL BE WITHIN TOLERANCES SPECIFIED. EACH AIR INLET OR OUTLET AND HYDRONIC COIL SHALL BE EQUIPPED WITH A MEANS FOR BALANCING.

8. FUNCTIONAL PERFORMANCE TESTING (FPT): THE CCXP SHALL VERIFY AND WITNESS WRITTEN PROCEDURES WHICH CLEARLY DESCRIBE THE INDIVIDUAL SYSTEMATIC TEST PROCEDURES, THE EXPECTED SYSTEMS' RESPONSE, ACCEPTANCE CRITERIA FOR EACH PROCEDURE, THE ACTUAL RESPONSE OR FINDINGS AND ANY NOTES. TESTING SHALL AFFIRM OPERATION DURING ACTUAL OR SIMULATED WINTER AND SUMMER CONDITIONS AND DURING FULL OUTSIDE AIR CONDITIONS.
   A. EQUIPMENT FPT SHALL DEMONSTRATE THE CORRECT INSTALLATION AND OPERATION OF EACH COMPONENT, SYSTEM, AND SYSTEM-TO-SYSTEM UBTERTIE RELATIONSHIP. TESTING SHALL INCLUDE ALL MODES AND SEQUENCE OF OPERATIONS, INCLUDING FULL-LOAD, PART-LOAD, EMERGENCY, ALARMS AND LOSS OF POWER.
   B. CONTROL SYSTEMS SHALL BE TESTED TO ENSURE THAT CONTROL DEVICES, COMPONENTS, EQUIPMENT AND SYSTEMS ARE CALIBRATED, ADJUSTED AND OPERATE IN ACCORDANCE WITH THE PLANS AND SPECIFICATIONS. SEQUENCE OF OPERATION SHALL BE FUNCTIONALLY TESTED TO DOCUMENT THEY OPERATE AS REQUIRED.

9. OWNER TRAINING: PROVIDE SYSTEM/EQUIPMENT OVERVIEW (WHAT IT IS, WHAT IT DOES AND WHICH OTHER SYSTEMS AND OR EQUIPMENT DOES IT INTERFACE WITH). REVIEW THE AVAILABLE O&M MATERIALS. REVIEW THE PROJECT RECORD DRAWINGS. PROVIDE HANDS-ON DEMONSTRATION OF ALL NORMAL MAINTENANCE PROCEDURES, NORMAL OPERATING MODES, AND ALL EMERGENCY SHUTDOWN AND START-UP PROCEDURES. INCLUDE WRITTEN DOCUMENTATION THAT ALL THE PREVIOUS HAS BEEN COMPLETED.

10. FINAL COMMISSIONING REPORT: THE CCXP SHALL COMPLETE AND CERTIFY THE RESULTS OF ALL FUNCTIONAL PERFORMANCE TESTS AND THAT THE COMMISSIONING PLAN HAS BEEN FULLY EXECUTED. REPORT SHALL INCLUDE:
    A. DISPOSITION OF ALL DEFICIENCIES FOUND DURING TESTING, INCLUDING DETAILS OF CORRECTIVE MEASURES USED OR PROPOSED.
    B. ALL FUNCTIONAL PERFORMANCE TEST PROCEDURES USED DURING THE COMMISSIONING PROCESS INCLUDING CRITERIA FOR TEST ACCEPTANCE, PROVIDED HEREIN FOR REPEATABILITY.

11. BUILDINGS OR PORTIONS THEREOF, SHALL NOT BE CONSIDERED ACCEPTABLE FOR FINAL INSPECTION UNTIL THE CODE OFFICIAL HAS RECEIVED A LETTER OF TRANSMITTAL FROM THE BUILDING OWNER ACKNOWLEDGING RECEIPT OF THE PRELIMINARY COMMISSIONING REPORT. THIS MAY BE ACCOMPLISHED BY SUBMITTING THE COMMISSIONING COMPLIANCE CHECKLIST.

12. THE MECHANICAL CONTRACTOR SHALL NOT BE CONSIDERED SUBSTANTIALLY COMPLETE UNTIL THE PRELIMINARY COMMISSIONING REPORT HAS BEEN APPROVED BY THE ENGINEER.

HVAC GENERAL NOTES

1. THESE PLANS ARE SCHEMATIC AND DO NOT SHOW EXACT ROUTING OR EVERY OFFSET, WHICH MAY BE REQUIRED. THE HVAC CONTRACTOR IS TO COORDINATE WITH ALL OTHER TRADES AND IS TO VERIFY ALL CLEARANCES BEFORE COMMENCING WORK.
2. MATERIALS, METHODS AND INSTALLATION SHALL COMPLY WITH THE PROVISIONS OF THE LATEST EDITION OF THE INTERNATIONAL MECHANICAL CODE, INTERNATIONAL BUILDING CODE, INTERNATIONAL FIRE CODE AND LOCAL CODES AND ORDINANCES.
3. DUCT CONSTRUCTION AND HANGING SHALL COMPLY WITH THE LATEST IMC AND WITH CURRENT SMACNA STANDARDS.
4. JOINTS OF DUCT SYSTEM SHALL BE SEALED WITH GASKETS OR LISTED MASTIC TYPE DUCT SEALANT.
5. DUCTS SHALL BE INSULATED AS INDICATED ON PLANS TO MEET THE REQUIREMENTS OF THE CURRENT INTERNATIONAL ENERGY CODE AND SPECIFICATION.
6. FLEXIBLE DUCTS SHALL ONLY BE USED WHERE SHOWN AND SHALL NOT EXCEED 6 FT IN LENGTH UNLESS NOTED OTHERWISE.
7. PROVIDE EARTHQUAKE RESTRAINT FOR HVAC EQUIPMENT IN ACCORDANCE WITH THE CURRENT IBC.
8. PIPING PENETRATIONS OF FIRE RATED WALLS OR FLOOR SHALL BE SLEEVED AND FIRE STOPPED WITH LISTED MATERIALS SO AS TO MAINTAIN THE INTEGRITY AND RATING OF THE FLOOR OR WALL.
9. PROVIDE RETURN DUCT SMOKE DETECTOR(S) FOR AUTOMATIC SHUT DOWN OF ALL HEATING OR COOLING EQUIPMENT DELIVERING IN EXCESS OF 2000 CFM IN ACCORDANCE WITH THE CURRENT INTERNATIONAL MECHANICAL CODE. POWER WIRING AND INTERLOCK WIRING WITH THE BUILDING FIRE ALARM SYSTEM IS BY THE ELECTRICAL CONTRACTOR.
10. HVAC EQUIPMENT, VALVES AND DAMPERS SHALL BE LOCATED IN EASILY ACCESSIBLE LOCATIONS, UNLESS SHOWN ON ARCHITECTURAL DRAWINGS. REQUIRED ACCESS PANELS SHALL BE PROVIDED BY THE HVAC CONTRACTOR AND INSTALLED BY THE GENERAL CONTRACTOR.
11. HVAC CONTRACTOR MUST COORDINATE WITH LIGHTING FIXTURES PRIOR TO DUCT AND PIPING INSTALLATION.

HVAC ENERGY CODE NOTES

1. SEE SCHEDULES FOR EQUIPMENT TYPE, CAPACITY AND EFFICIENCY. ALL EQUIPMENT SHALL MEET MINIMUM EFFICIENCY PER C403.2.3.
2. THERMOSTATIC CONTROLS IN THE SAME ZONE OR IN NEIGHBORING ZONES CONNECTED BY OPENINGS LARGER THAN 10% OF THE FLOOR AREA OF EITHER ZONE SHALL BE INTERLOCKED TO NOT ALLOW SIMULTANEOUS HEATING AND COOLING.
3. HEAT PUMPS WITH SUPPLEMENTARY ELECTRIC HEAT SHALL INCLUDE MICROPROCESSOR CONTROLS THAT MINIMIZE ELECTRIC HEAT USAGE DURING START-UP, SET-UP, AND DEFROST CONDITIONS. CONTROLS SHALL ANTICIPATE NEED FOR HEAT AND USE COMPRESSION HEATING AS THE FIRST STAGE. CONTROLS SHALL INDICATE WHEN ELECTRIC HEAT IS BEING USED THROUGH VISUAL MEANS. ELECTRIC HEAT SHALL NOT OPERATE ABOVE 40 F OUTSIDE AIR TEMPERATURE.
4. THERMOSTATIC CONTROLS SHALL BE CONFIGURED WITH AT LEAST A 5F DEADBAND BETWEEN HEATING AND COOLING SETPOINTS.
5. THERMOSTATS (OTHER THAN GROUP R) SHALL BE 7-DAY PROGRAMMABLE WITH AUTOMATIC SETBACK CONTROLS SET DOWN TO 55F AND UP TO 85F. CONTROLS SHALL MAINTAIN PROGRAMMING FOR AT LEAST 10 HOURS DURING LOSS OF POWER. CONTROLS SHALL HAVE A MANUAL 2 HR OVERRIDE FOR TEMPORARY OPERATION. CONTROLS SHALL ADJUST THE DAILY START TIME FOR MORNING WARMUP PRIOR TO SCHEDULED OCCUPANCY.
6. PROVIDE AMCA CLASS 1 MOTORIZED CONTROL DAMPERS FOR OUTSIDE AIR INTAKES, EXHAUST OUTLETS, RELIEF OPENINGS, STAIRWAY AND SHAFT VENTS AND RETURN SIDE OF AIRSIDE ECONOMIZERS.
7. AIR-COOLED UNITARY DIRECT-EXPANSION UNITS WITH A COOLING CAPACITY OF 54 MBH OR GREATER THAT ARE EQUIPPED WITH AN ECONOMIZER SHALL INCLUDE FAULT DETECTION AND DIAGNOSTICS (FDD).
8. PROVIDE GAS-FIRED HEATING EQUIPMENT WITH MODULATING OR STAGED COMBUSTION CONTROL FOR ALL EQUIPMENT OVER 225 MBH.
9. THERMOSTATS (GROUP R) SHALL BE 5-2 PROGRAMMABLE SCHEDULE WITH AT LEAST 2 SETBACK PERIODS PER DAY.
10. PROVIDE DUCT, SHAFT AND PLENUM INSULATION PER C403.2.8 AND SPECIFICATION SECTION 23 07 00.
11. SEAL ALL TRANSVERSE AND LONGITUDINAL SEAMS, JOINTS AND CONNECTIONS OF ALL DUCTWORK WITH WELDS, GASKETS OR MASTICS.
12. PROVIDE PIPE INSULATION PER ENERGY CODE SECTION C403.2.9 AND SPECIFICATION SECTION 23 07 00.
13. INSULATION EXPOSED TO WEATHER SHALL BE PROTECTED FROM DAMAGE, SUNLIGHT, MOISTURE AND WIND. PROVIDE JACKET AND ALUMINUM COVERS. ADHESIVE TAPE IS NOT PERMITTED.
14. SINGLE FAN OR MULTIPLE FANS IN PARALLEL WITH COMBINED MOTOR NAMEPLATE OVER 5HP SHALL HAVE A FAN EFFICIENCY GRADE (FEG) OF 67 OR HIGHER AND SHALL BE SELECTED TO OPERATE WITHIN 15% OF THE MAXIMUM TOTAL EFFICIENCY OF THE FAN.
15. COOLING SYSTEMS 65 MBH AND GREATER SHALL HAVE TWO SPEED FAN CONTROL OR MODULATING FAN CONTROL.
16. FAN AND PUMP MOTORS 7.5 HP AND GREATER SHALL BE PROVIDED WITH A VFD.
17. ECONOMIZERS SHALL BE INTEGRATED WITH MECHANICAL COOLING AND SHALL BE CAPABLE OF PROVIDING PARTIAL ECONOMIZER COOLING EVEN WHEN ADDITIONAL MECHANICAL COOLING IS REQUIRED.
18. AIR ECONOMIZERS SHALL HAVE FIXED DRY-BULB HIGH-LIMIT SHUTOFF CONTROL NOT TO EXCEED 75 DEG. F.
19. ALL ELECTRIC MOTORS SHALL MEET THE EFFICIENCY REQUIREMENTS OF TABLES C405.8(1) THROUGH C405.8(4).
20. FAN MOTORS 1/12 HP UP TO 1 HP SHALL BE ECM.
21. PROVIDE A MEANS OF BALANCING EVERY AIR INLET AND OUTLET AND EVERY AIR OR WATER TERMINAL DEVICE.
22. ALL PIPE AND DUCT INSULATION SHALL BE LABELLED WITH ITS THICKNESS AND INSULATING VALUE (R OR K).

SIDER+BYERS
MECHANICAL + ELECTRICAL ENGINEERS
192 Nickerson, Suite #300
Seattle, Washington 98109
Phone: 206.285.2966

TCA
ARCHITECTURE + PLANNING + DESIGN
6211 ROOSEVELT WAY NORTHEAST
SEATTLE, WA 98115
tel: (206) 522-3830
fax: (206) 522-2456

BID SET

No.	Description	Date:

Project Title:

FIRE STATION 24

City of Kirkland
Kirkland, Washington

Sheet Title:

SCHEDULES

Scale: 1/8"=1'-0"
Project No. : 18040
Date : JULY 21, 2020

Sheet Number :

M1.1

Provided to Builders Exchange of WA, Inc. For usage Conditions Agreement see www.bxwa.com - Always Verify Scal

SIDER+BYERS
MECHANICAL+ELECTRICAL ENGINEERS
192 Nickerson, Suite #300
Seattle, Washington 98109
Phone: 206.285.2966

SPLIT SYSTEM A/C & HEAT PUMP UNIT SCHEDULE

INDOOR UNIT																OUTDOOR UNIT												
			SUPPLY			COOLING						HEATING	ELECTRICAL		SOUND					COOLING			HEATING		ELECTRICAL			SOUND		
MARK	MAKE	MODEL	TOTAL CFM	ESP W.C.	OSA CFM	TOTAL MBH	SENSIBLE MBH	EAT DB / WB	OAT DB	ECONO (Y/N)	ECONO EXCEPT	HEATING MBH OUTPUT @ 20 OAT	VOLT/PH	MCA	LEVEL dBA	OP. WT. LBS.	MARK	MAKE	MODEL	TOTAL MBH	IEER	EER	TOTAL MBH	COP AT 47 F	VOLT/PH	MCA	MOCP	SCCR kA	LEVEL dBA	OP. WT. LBS.	NOTES:
																	CM-1	MITSUBISHI-TRANE	TURY-E0963AN40AN	96	28.25	14.07	108	4.02	208/3	31	45	(C)	60	700	E, 1, 2
FC-1	MITSUBISHI-TRANE	TPEFYP018MA143A	500	0.6	N/A	17.0	13.4	75/63	88.0	N	C403.6	14.1	208/1	1.56	32	60														A, D, 3
FC-2	MITSUBISHI-TRANE	TPLFYP008FM140A	280	N/A	N/A	7.6	6.1	75/63	88.0	N	C403.6	6.4	208/1	0.28	30	35														A, D, 4
FC-3	MITSUBISHI-TRANE	TPLFYP018FM140A	390	N/A	N/A	17.0	11.7	75/63	88.0	N	C403.6	14.1	208/1	0.5	39	40														A, D, 4
FC-4	MITSUBISHI-TRANE	TPEFYP018MA143A	500	0.6	N/A	17.0	13.4	75/63	88.0	N	C403.6	14.1	208/1	1.56	32	60														A, D, 3
FC-5	MITSUBISHI-TRANE	TPEFYP036MH142A	1300	0.6	N/A	34.0	27.1	75/63	88.0	N	C403.6	28.3	208/1	4.16	46	155														A, B, 3
																	CM-2	MITSUBISHI-TRANE	TURY-E0723AN40AN	72	27.85	14.4	80	4.09	208/3	23	35	(C)	58	600	E, 1, 2
FC-6	MITSUBISHI-TRANE	TPKFYP012HM142A	370	N/A	N/A	11.3	8.6	75/63	88.0	N	C403.6	9.6	208/1	0.38	38	30														A, B, 4
FC-7	MITSUBISHI-TRANE	TPEFYP036MH142A	1150	0.6	N/A	34.0	27.1	75/63	88.0	N	C403.6	28.5	208/1	4.16	46	155														A, B, 3
FC-8	MITSUBISHI-TRANE	TPKFYP006BM142B	180	N/A	N/A	5.6	4.2	75/63	88.0	N	C403.6	4.8	208/1	0.19	33	25														A. B, 4
FC-9	MITSUBISHI-TRANE	TPKFYP006BM142B	180	N/A	N/A	5.6	4.2	75/63	88.0	N	C403.6	4.8	208/1	0.19	33	25														A, B, 4
FC-10	MITSUBISHI-TRANE	TPKFYP006BM142B	180	N/A	N/A	5.6	4.2	75/63	88.0	N	C403.6	4.8	208/1	0.19	33	25														A, B, 4
FC-11	MITSUBISHI-TRANE	TPKFYP006BM142B	180	N/A	N/A	5.6	4.2	75/63	88.0	N	C403.6	4.8	208/1	0.19	33	25														A, B, 4
																	CM-3	MITSUBISHI-TRANE	TURY-E0723AN40AN	72	31.2	15.4	80	4.37	208/3	23	35	(C)	58	600	E, 1, 2
FC-12	MITSUBISHI-TRANE	TPKFYP006BM142B	180	N/A	N/A	5.6	4.2	75/63	88.0	N	C403.6	4.8	208/1	0.19	33	25														A, B, 4
FC-13	MITSUBISHI-TRANE	TPKFYP006BM142B	180	N/A	N/A	5.6	4.2	75/63	88.0	N	C403.6	4.8	208/1	0.19	33	25														A, B, 4
FC-14	MITSUBISHI-TRANE	TPKFYP006BM142B	180	N/A	N/A	5.6	4.2	75/63	88.0	N	C403.6	4.8	208/1	0.19	33	25														A, B, 4
FC-15	MITSUBISHI-TRANE	TPKFYP006BM142B	180	N/A	N/A	5.6	4.2	75/63	88.0	N	C403.6	4.8	208/1	0.19	33	25														A. B, 4
FC-16A	MITSUBISHI-TRANE	TPKFYP024KM142A	920	N/A	N/A	22.7	19.0	75/63	88.0	N	C403.6	19.1	208/1	0.63	49	50														A, B, 4
FC-16B	MITSUBISHI-TRANE	TPKFYP024KM142A	920	N/A	N/A	22.7	19.0	75/64	88.0	N	C403.6	19.1	208/1	0.63	49	50														B, 4

NOTES:
1. MANUFACTURER'S DIGITAL CONTROL SYSTEM WITH TE-200A CENTRAL CONTROLLER.
2. CONTROL POWER SUPPLY UNIT.
3. FACTORY FILTER BOX WITH MERV 8 FILTER.
4. FACTORY PROVIDED WASHABLE FILTER.

A. TAR-40MA REMOTE CONTROLLER.
B. PROVIDE WITH BLUEDIAMOND CONDENSATE PUMP
C. SEE SPECIFICATIONS AND ELECTRICAL.
D. INTEGRAL CONDENSATE PUMP
E. PAC-YG66DCA DIDO CONTROLLER

BRANCH CIRCUIT CONTROLLER SCHEDULE

MARK	MAKE	MODEL	NUMBER OF BRANCHES	POWER SOURCE	MCA	WEIGHT	NOTES:
BC-1	MITSUBISHI-TRANE	TCMBG0106SJ11N4	6	208/1	0.65	65	ALL
BC-2	MITSUBISHI-TRANE	TCMBG0108SJ11N4	8	208/1	0.87	75	ALL
BC-3	MITSUBISHI-TRANE	TCMBG0108SJ11N4	8	208/1	0.87	75	ALL

NOTES:
1. PROVIDE WITH BLUE DIAMOND CONDENSATE PUMP.
2. PIPE CONDENSATE DRAINAGE TO NEAREST INDIRECT WASTE BY PLUMBER.

FAN SCHEDULE

MARK	SERVES	MAKE	MODEL	TYPE	LOW CFM	CFM	ESP INCH WC	RPM	BHP	HP (WATTS)	ELEC VOLT/PH	WT. LBS	MAX SOUND	NOTES:
EF-1	APP BAY	GREENHECK	CUBE-240	SIDEWALL CENT	N/A	6000	0.375	758	1.16	1-1/2	208/3	250	67 DBA	C, D, 3, 4, 5
EF-2	SHOP	GREENHECK	G-095-VG	ROOF CENT	N/A	500	0.375	1313	0.07	1/6	120/1	40	52 DBA	A, 1, 2, 3, 5
MUA	KITCHEN HOOD SUPPLY	GREENHECK	SQ-120-VG	INLINE CENT	N/A	900	0.7	1301	0.2	1/2	120/1	150	55 DBA	B, 1, 5, 7, 8, 9
KEF	KITCHEN HOOD EXHAUST	GREENHECK	CUE-141-VG	SIDEWALL CENT	N/A	1000	1	1255	0.31	3/4	120/1	125	59 DBA	B,1,3 4,5,10,11,12

NOTES:
1. ECM SPEED CONTROL ON MOTOR
2. FACTORY INSULATED CURB, MATCH ROOF SLOPE
3. ALUMINUM BIRDSCREEN, CURB SEAL
4. SIDEWALL FACTORY INSULATED CURB
5. MOTORIZED INSULATED CONTROL DAMPER
6. NOT USED
7. FILTER BOX W/ 2" MERV 8 FILTERS
8. INSULATED HOUSING
9. SPRING ISOLATION HANGERS
10. UL-762 RATED, NON-STICK WHEEL
11. SIDEWALL HINGED W/ LATCH & HIGH TEMP SEAL.
12. CLEANOUT PORT, SIDEWALL GREASE PAN

A. RUNS CONTINUOUSLY
B. INTERLOCK WITH KITCHEN HOOD
C. 2-HR WALL TIMER
D. CO/NO2 SENSORS

KITCHEN HOOD SCHEDULE (NOT TYPE I)

MARK	MAKE	MODEL	WIDTH	LENGTH	HEIGHT	EXHAUST CFM	EXHAUST S.P.	SUPPLY CFM	SUPPLY S.P.	WEIGHT	VOLTAGE	NOTES:
HOOD	ACCUREX	XBFW	42"	42"	24"	1000	0.485	900	0.16	350	115/1	ALL

NOTES:
1. TWO (2) INCANDESCENT LIGHT FIXTURES, (40 FC MIN).
2. GREASE CUP MOUNTED ON RIGHT END OF HOOD.
3. ALL 18GA TYPE 430 STAINLESS STEEL CONSTRUCTION.
4. 20" STAINLESS BAFFLE FILTERS WITH FILTER REMOVAL TOOL.
5. DUCT COLLARS WITH MOUNTING FLANGES.
6. SWITCHES FOR LIGHT & EXHAUST FAN, WALL MOUNTED (BY DIV. 26).
7. 4" CEILING ENCLOSURE SS PANELS (3 SIDES).
8. STAINLESS STEEL WALL BACKSPLASH
9. INTEGRAL SUPPLY AIR PLENUM AND FACE DISCHARGE.
10. 10"X10" EXHAUST COLLAR, 10"X18" SUPPLY COLLARS
11. DIGITAL TEMPERATURE INTERLOCK CONTROLS

TCA
ARCHITECTURE + PLANNING + DESIGN
6211 ROOSEVELT WAY
NORTHEAST
SEATTLE, WA 98115
tel: (206) 522-3830
fax: (206) 522-2456

BID SET

No.	Description	Date:

Project Title:

FIRE STATION 24
City of Kirkland
Kirkland, Washington

Sheet Title:

SCHEDULES

Scale: 1/8"=1'-0"
Project No. : 18040
Date : JULY 21, 2020

Sheet Number :

M1.2

Provided to Builders Exchange of WA, Inc. For usage Conditions Agreement see www.bxwa.com - Always Verify Scal

ENERGY RECOVERY VENTILATOR SCHEDULE

MARK	MAKE	MODEL	TYPE	SUPPLY CFM	SUPPLY ESP	SUPPLY HP	EXHAUST CFM	EXHAUST ESP	EXHAUST HP	HEAT EXCHANGER MATERIAL	HEAT EXCHANGER WINTER EFF.	HEAT INPUT	HEAT OUTPUT	HEAT EFF	ELECTRICAL MCA	ELECTRICAL MOCP	ELECTRICAL VOLT/PH	ELECTRICAL SCCR	WGT. LBS	NOTES
ERV-1	GREENHECK	ERCH-20-30L	OUTDOOR	1,655	1	2	1,450	1	1.5	WHEEL	72.0%	8.3 kW	SCR	ELEC	47.2	50	208/3	NOTE F	1600	A,B,C,E,G,1,2,3,4,5,6,7,8,9,11
ERV-2	GREENHECK	ERCH-20-30L	OUTDOOR	1025-1300	1	1	975-1225	1	1.5	WHEEL	82.7%	8.3 kW	SCR	ELEC	44.6	45	208/3	NOTE F	1600	A,B,D,E,G,1,2,3,4,5,6,7,8,10,11

NOTES:

1. DOUBLE WALL CONSTRUCTION W/ INSULATION & HINGED ACCESS
2. MERV 8 AND MERV 13 SUPPLY FILTERS; MERV 8 EXHAUST FILTERS
3. MOTORIZED INSULATED LOW LEAK SUPPLY AND EXHAUST DAMPERS
4. PERMATECTOR FINISH
5. INTERNAL NEOPRENE ISOLATION
6. INTAKE AND EXHAUST AIR DOWNTURN WEATHER HOODS.
7. UNIT SINGLE POINT POWER W/ FAN VFDS
8. WHEEL ROTATION SENSOR & DIRTY FILTER SENSORS
9. A9-9 SUPPLY AND A9-9 EXHAUST BLOWERS.
10. A10-6 SUPPLY AND A10-6 EXHAUST BLOWERS.
11. SEIMSIC RATED SPRING CURB

A. MICROPROCESSOR UNIT CONTROL, WITH REMOTE INTERFACE
B. DISCHARGE TEMPERATURE CONTROL, SCR HEATER CONTROL
C. SUPPLY/EXHAUST FAN CONTROL - CONSTANT VOLUME, W/VFD FOR BALANCING
D. SUPPLY FAN CONTROL - DUCT PRESSURE, W/VFD; EXHAUST FAN CONTROL - SUPPLY FAN TRACKING W/VFI
E. MODULATING WHEEL FROST CONTROL
F. SEE SPECIFICATIONS AND ELECTRICAL
G. MODULATING WHEEL ECONOMIZER CONTROL

RADIANT CEILING PANEL SCHEDULE

MARK	SERVES	MANUFACTURER	MODEL	SIZE	ELECTRICAL WATTS	ELECTRICAL VOLT/PH	WEIGHT	NOTES:
RCP	SEE PLANS	MARKEL	CP-807	24"X48"	750	208/1	40	1, 2, 3

NOTES:

1. PROVIDE LOW VOLTAGE PROGRAMMABLE WALL THERMOSTAT W/ RELAY(S).
2. PROVIDE SURFACE MOUNTING FRAME.
3. SEE PLANS FOR UNIT QUANTITY.

ELECTRIC WALL HEATER SCHEDULE

MARK	MAKE	MODEL	HEAT W	ELEC VOLT/PH	NOTES:
EWH-1	MARKEL	3320	750 W	120 / 1	1, 2, 3
EWH-2	MARKEL	3320	1500 W	120 / 1	1, 2, 3

NOTES:

1. HIGH TEMPERATURE MANUAL RESET AND OVERTEMPERATURE SAFEGUARD.
2. BUILT IN THERMOSTAT
3. SEE PLANS FOR UNIT QUANTITY.

CEILING FAN SCHEDULE

MARK	MAKE	MODEL	DIA.	CFM	ELEC (HP)	VOLT/PH	WGT. LBS	NOTES
CF-1	MACROAIR	AVD370	8'	HVLS	1/4	115 / 1	60	ALL
CF-2	MACROAIR	AVD370	8'	HVLS	1/4	115 / 1	60	ALL
CF-3	MACROAIR	AVD370	6'	HVLS	1/4	115 / 1	60	ALL

NOTES:

1. DIGITAL REMOTE CONTROLLER.
2. PROVIDE FIXED ANGLE MOUNT WITH GUY-WIRE SUPPORT CABLES.
3. PROVIDE DROP TUBE EXTENSIONS FOR 2FT TOTAL DROP AT MOUNTING HEIGHT.
4. COLOR SELECTED BY ARCHITECT

ELECTRIC DUCT HEATER SCHEDULE

MARK	MAKE	MODEL	SERVES	DUCT SIZE	HEAT KW	STAGES	VOLT / PH	NOTES:
DH-1	INDEECO	QUZ	MUA	16X16	15	SCR	208/3	ALL
DH-2	INDEECO	QUZ	DUCT	12X12	8	SCR	208/3	ALL

NOTES:

1. FLANGE DUCT CONNECTION
2. AIR FLOW SWITCH SAFETY HIGH LIMIT
3. PROPORTIONAL SCR CONTROL
4. MAGNETIC CONTACTS
5. CONTROL TRANSFORMER

A. SINGLE DOWNSTREAM DUCT THERMOSTAT

INFRARED TUBE HEATER SCHEDULE

MARK	MFR.	MODEL	TUBE LENGTH	GAS HEATING INPUT MBH	EFFICIENCY IF	ELECTRICAL AMP/HP	ELECTRICAL VOLT/PH	WEIGHT	NOTES:
IH-1	ROBERTS GORDON	CTH3-80	50'	150	14	5 AMP	115 / 1	260	ALL
IH-2	ROBERTS GORDON	CTH3-80	50'	150	14	5 AMP	115 / 1	260	ALL
IH-3	ROBERTS GORDON	CTH3-80	30'	80	14	5 AMP	115 / 1	170	ALL

NOTES:

1. PROVIDE COMPLETE RADIANT SYSTEM W/ CONTROLS.
2. PROVIDE SEISMIC RESTRAINT PER MANUFACTURERS' RECOMMENDATIONS.
3. HIGH EFFICIENY REFLECTOR
4. PROGRAMMABLE MODULATING THERMOSTAT IN VENTED METAL ENCLOSURE.

DIFFUSER AND GRILLE SCHEDULE

ITEM	MAKE	MODEL	DESCRIPTION	SIZE	MARK
SUPPLY DIFFUSER	TITUS	MCD	SQUARE FACE/NECK, SURFACE MOUNT FRAME SIZE OR 24"X24" LAY-IN. SIDE INLET PLENUM PER PLANS. 4 ADJ. CORES, STEEL, WHITE ENAMEL	6"X6" 8"X8" 10"X10" 12"X12"	D-1 D-2 D-3 D-4
SUPPLY DIFFUSER	TITUS	TJD	SQUARE FACE INDUCTION NOZZLES STEEL, WHITE ENAMEL PROVIDE 5"Ø SIDE INLET PLENUM	8"-24"X24"	D-11
SUPPLY DIFFUSER	PRICE	RSD	SQUARE FACE, 24"X24" LAY-IN. CIRCULAR ARRAY, SIDE INLET PLENUM. ADJUSTABLE DISCHARGE PATTERN. STEEL, WHITE W/ BLACK BLADES.	6"-12"X12" 8" 10"	D-21 D-22 D-23
OSA SUPPLY DIFFUSER	PRICE	RTD	SQUARE FACE, 24"X24" LAY-IN. HIGH INDUCTION VORTEX PATTERN PROVIDE SIDE INLET PLENUM. STEEL	10" 12"	D-31 D-32
SUPPLY NOZZLE	PRICE	ANR	ROUND, SIDEWALL NOZZLE, 60 DEG PATTERN CONTROLLER ALUMINUM, CLEAR ANODIZED	4" 5"	N-1 N-2
SUPPLY REGISTER	THERMAL CORE	HCRH	HIGH INDUCTION PERFORATED FACE, 1 HOLE PER SQUARE INCH. EXTRUDED ALUMINUM MOUNTING FRAME.	12"x6"	R-21
RETURN GRILLE	TITUS	50F	1/2" EGG CRATE, ALUM., WHITE ENAMEL	12"X24" 24"X24"	G-1 G-2
RETURN GRILLE	TITUS	355RL	1/2" BLADE SPACING, 35 DEG DEFLECTION, BLADES PARALLEL TO LONG DIMENSION, STEEL, WHITE	12"X12" 10"X10"	G-11 G-12

NOTES:

1. CEILING UNIT FRAME SHALL BE COMPATIBLE WITH CEILINGS; FLAT FRAME SURFACE MOUNT (TITUS BORDER TYPE 1) FOR DRYWALL CEILINGS AND WITH LAY-IN PANEL FOR EXPOSED GRID CEILINGS (TITUS BORDER TYPE 3). SEE ARCHITECTURAL PLANS FOR CEILING TYPES.
2. BEVELED DROP FACE DIFFUSERS (TITUS BORDER TYPE 6) ARE NOT ACCEPTABLE.
3. SIZE INDICATES DUCT COLLAR.
4. PROVIDE POWDER COAT PAINT OPTIONS FOR GRDS IN ARCHITCTURAL WOOD CEILINGS. COLOR SELECTED BY ARCHITECT.

LOUVER SCHEDULE

MARK	MAKE	MODEL	WIDTH	HEIGHT	FREE AREA	MATERIAL	FINISH	NOTES:
L-1	GREENHECK	ESD-403	36"	96"	12.61	ALUMINUM	KYNAR	1, 2, 3
L-2	GREENHECK	ESD-403	48"	18"	2.46	ALUMINUM	KYNAR	1, 2, 3

NOTES:

1. COLOR TO BE SELECTED BY ARCHITECT.
2. PROVIDE ALUMINUM BIRDSCREEN.
3. PROVIDE INSTALLATION HARDWARE AS REQUIRED.

SIDER+BYERS
MECHANICAL+ELECTRICAL ENGINEERS
192 Nickerson, Suite #300
Seattle, Washington 98109
Phone: 206.285.2966

TCA
ARCHITECTURE + PLANNING + DESIGN
6211 ROOSEVELT WAY NORTHEAST
SEATTLE, WA 98115
tel: (206) 522-3830
fax: (206) 522-2456

BID SET

No.	Description	Date:

Project Title:

FIRE STATION 24

City of Kirkland
Kirkland, Washington

Sheet Title:

SCHEDULES

Scale: 1/8"=1'-0"
Project No. : 18040
Date : JULY 21, 2020

Sheet Number :

M1.3

Provided to Builders Exchange of WA, Inc. For usage Conditions Agreement see www.bxwa.com - Always Verify Scal

SEQUENCE OF OPERATIONS

1. CONTROL SYSTEM.

   PROVIDE ELECTRIC/ELECTRONIC CONTROLS TO PERFORM FUNCTIONS IN ACCORD WITH THE FOLLOWING.

2. VRFZ SPLIT SYSTEMS: CM-1, CM-2, CM-3, BC-1, BC-2, BC-3 & FC-1 TO FC-16

   THE FOLLOWING CONTROL BY UNIT MANUFACTURER DIGITAL CONTROL SYSTEM INCLUDED WITH EQUIPMENT.

   TAR-MA ZONE REMOTE CONTROLLERS PROVIDE START/STOP, TEMPERATURE CONTROL & FAN SPEED CONTROL FOR EACH ZONE.

   CENTRAL TE-200 CONTROLLER PROVIDES SETBACK SCHEDULING, TEMPERATURE LIMIT SETTINGS, ZONE CONTROL & ERROR MESSAGES FOR EACH ZONE. SINGLE CONTROLLER COMMUNICATES WITH CM-1, CM-2, CM-3, BC-1, BC-2, BC-3 AND ALL FAN COILS.

   FAN COIL FANS ARE GENERALLY OFF DURING OCCUPIED MODE AND CYCLE ON HEAT/COOL WHICH MODULATES TO MAINTAIN ROOM SETPOINT. FAN COILS CYCLE DURING UNOCCUPIED SCHEDULE TO MAINTAIN UNOCCUPIED HEAT SETPOINT.

   ALL FAN COILS SCHEDULE OCCUPIED 24/7.

   DI: (DIGITAL INPUT) (QTY2) RELAY ACTIVATES ON ERV-1, ERV-2 ALARM CONTACTS AND PROVIDES SYSTEM ALARM.

3. ENERGY RECOVERY VENTILATORS: ERV-1 & ERV-2

   UNIT CONTROL BY MANUFACTURER'S MICROPROCESSOR CONTROLLER WITH REMOTE INTERFACE.

   ERVS OPERATE CONTINUOUSLY IN OCCUPIED MODE, SCHEDULED 24/7.

   SUPPLY AND EXHAUST FANS OPERATE CONTINUOUSLY DURING OCCUPIED SCHEDULE AND ARE OFF DURING UNOCCUPIED. OUTSIDE AIR AND RELIEF DAMPERS ARE OPEN DURING NORMAL OPERATION AND CLOSE WHEN FANS ARE OFF OR IF UNIT FANS FAIL.

   RELAY ALARM CONTACT TO VRF CONTROL DI.

   ELECTRIC POST HEATING MODULATES TO MAINTAIN SUPPLY AIR TEMPERATURE SET-POINT OF 58 F (ADJ).

   WHEEL ROTATION MODULATES FOR FROST CONTROL WHEN FROSTING IS DETECTED BASED ON TEMPERATURE AND/OR WHEEL PRESSURE DROP.

   WHEEL ROTATION MODULATES/STOPS TO PROVIDE ECONOMIZER CONTROL WHEN OSA TEMP IS BETWEEN 60 AND 75 F WITH A SETPOINT OF 60 F.

   ERV-1: SUPPLY AND EXHAUST FAN VFD SPEEDS MANUALLY SET AT CONSTANT VOLUME BASED ON AIR BALANCE.

   ERV-2: SUPPLY FAN VFD MODULATES SUPPLY AIRFLOW TO MAINTAIN SUPPLY DUCT PRESSURE SETPOINT OF 0.5" W.G. (ADJ). SETPOINT SHOULD BE ADJUSTED DURING BALANCING TO PROVIDE OPTIMAL PERFORMANCE. EXHAUST FAN VFD SPEED TRACKS SUPPLY FAN VFD SPEED.

   UNIT FANS SHUT DOWN, MOTORIZED DAMPERS CLOSE AND CONTROLS ALARM IF UNIT SUPPLY TEMPERATURE DROPS BELOW 40 F (ADJ).

5. APPARATUS BAY EXHAUST FAN: EF-1

   FANS OPERATE WITH 2-HR WALL TIMER SWITCH (BY M.C.) OR RELAY FROM CO/NO2 SENSORS. FAN ACTIVATES ON CARBON MONOXIDE (CO) LEVEL OF 50 PPM (ADJ) OR NITROGEN DIOXIDE (NO2) LEVEL OF 3 PPM (ADJ).
   FAN INTERLOCK OPENS FAN MOTORIZED DAMPER AND ASSOCIATED LOUVER (L-1) MOTORIZED DAMPERS WHEN FAN IS OPERATING.
   ON A CO LEVEL OF 100 PPM (ADJ) OR A NO2 LEVEL OF 5 PPM (ADJ) RELAYS TO ACTIVATE AUDIBLE WARNING ALARM (BY M.C.)

6. GENERAL EXHAUST FAN: EF-2

   FAN OPERATES CONTINUOUSLY

7. KITCHEN HOOD EXHAUST FAN: KEF

   FAN OPERATES AND MOTORIZED DAMPER OPENS WITH HOOD FAN SWITCH OR HOOD TEMPERATURE SENSING CONTROL. INTERLOCK OPERATION WITH MUA.

8. KITCHEN HOOD MAKEUP AIR: MUA/DH-1

   HOOD FAN SWITCH ACTIVATES MUA AND ENABLES DH-1. INTERLOCK WITH MOTORIZED DAMPER. WHEN FAN IS RUNNING MOTORIZED OUTSIDE AIR DAMPER OPENS AND DUCT HEATER MODULATES TO MAINTAIN DUCT SUPPLY TEMP OF 68F (ADJ). MOTORIZED DAMPER CLOSES WHEN FAN IS OFF.

9. KITCHEN HOOD: HOOD

   SEPARATE SWITCHES REMOTE MOUNTED FOR LIGHTS AND FAN (BY DIV. 26). FAN SWITCH OPERATES KEF AND MUA. LIGHT SWITCH ACTIVATES INTEGRATED HOOD LIGHTS. DIGITAL TEMPERATURE INTERLOCK CONTROL AUTOMATICALLY ACTIVATES KEF AND MUA WHEN HEAT IS SENSED IN THE HOOD.

10. GAS FIRED INFRARED HEATERS: IH-1, IH-2 & IH-3

    UNITS OPERATE ON LOW VOLTAGE MODULATING PROGRAMMABLE THERMOSTATS. PROVIDE VENTED METAL ENCLOSURES.

11. RADIANT CEILING PANELS: RCP

    UNITS OPERATE WITH ELECTRONIC LOW VOLTAGE HEATING ONLY WALL THERMOSTATS WITH RELAYS. SPACE TEMPERATURE SETPOINT OF 60F (ADJ).

12. ELECTRIC WALL HEATERS: EWH-1 & EWH-2

    UNITS OPERATE WITH INTEGRAL THERMOSTAT.

13. KITCHEN RANGE GAS SOLENOID VALVE:

    VALVE IS NORMALLY CLOSED (WITHOUT POWER). VALVE IS OPEN FOR STANDARD OPERATION. VALVE CLOSES ON RELAY FROM STATION ALERTING SYSTEM, RESET BY MANUAL WALL SWITCH. (BY ALERTING EC).

14. BBQ GAS SOLENOID VALVE:

    VALVE IS NORMALLY CLOSED (WITHOUT POWER). VALVE IS OPEN FOR STANDARD OPERATION. VALVE CLOSES ON RELAY FROM STATION ALERTING SYSTEM, RESET BY MANUAL WALL SWITCH (BY ALERTING EC).

15. APPARATUS BAY CEILING FANS: CF-1, CF-2

    FANS OPERATE WITH MANUFACTURER'S WALL MOUNTED DIGITAL CONTROLLER.

16. FITNESS CEILING FAN: CF-3

    FAN OPERATES WITH MANUFACTURER'S WALL MOUNTED DIGITAL CONTROLLER.

17. BUNKER GEAR ROOM DRYING MODE:

    12-HR WALL TIMER ENABLES DUCT HEATER DH-2, OPENS TROX VFC SUPPLY AND EXHAUST CONTROL DAMPERS TO MAXIMUM AIRFLOW POSITION. DUCT HEATER MODULATES TO MAINTAIN DUCT SUPPLY TEMP OF 100F (ADJ). SUPPLY AND EXHAUST TROX MOTORIZED DAMPERS ARE SET TO MINIMUM AIRFLOW POSITION WHEN TIMER IS OFF.

SIDER+BYERS
MECHANICAL + ELECTRICAL ENGINEERS
192 Nickerson, Suite #300
Seattle, Washington 98109
Phone: 206.285.2966

TCA
ARCHITECTURE + PLANNING + DESIGN
6211 ROOSEVELT WAY NORTHEAST
SEATTLE, WA 98115
tel: (206) 522-3830
fax: (206) 522-2456

BID SET

No.	Description	Date:

Project Title:

FIRE STATION 24

City of Kirkland
Kirkland, Washington

Sheet Title:

SEQUENCE OF OPERATIONS

Scale: 1/8"=1'-0"
Project No. : 18040
Date : JULY 21, 2020

Sheet Number :

M1.4

Provided to Builders Exchange of WA, Inc. For usage Conditions Agreement see www.bxwa.com - Always Verify Scal

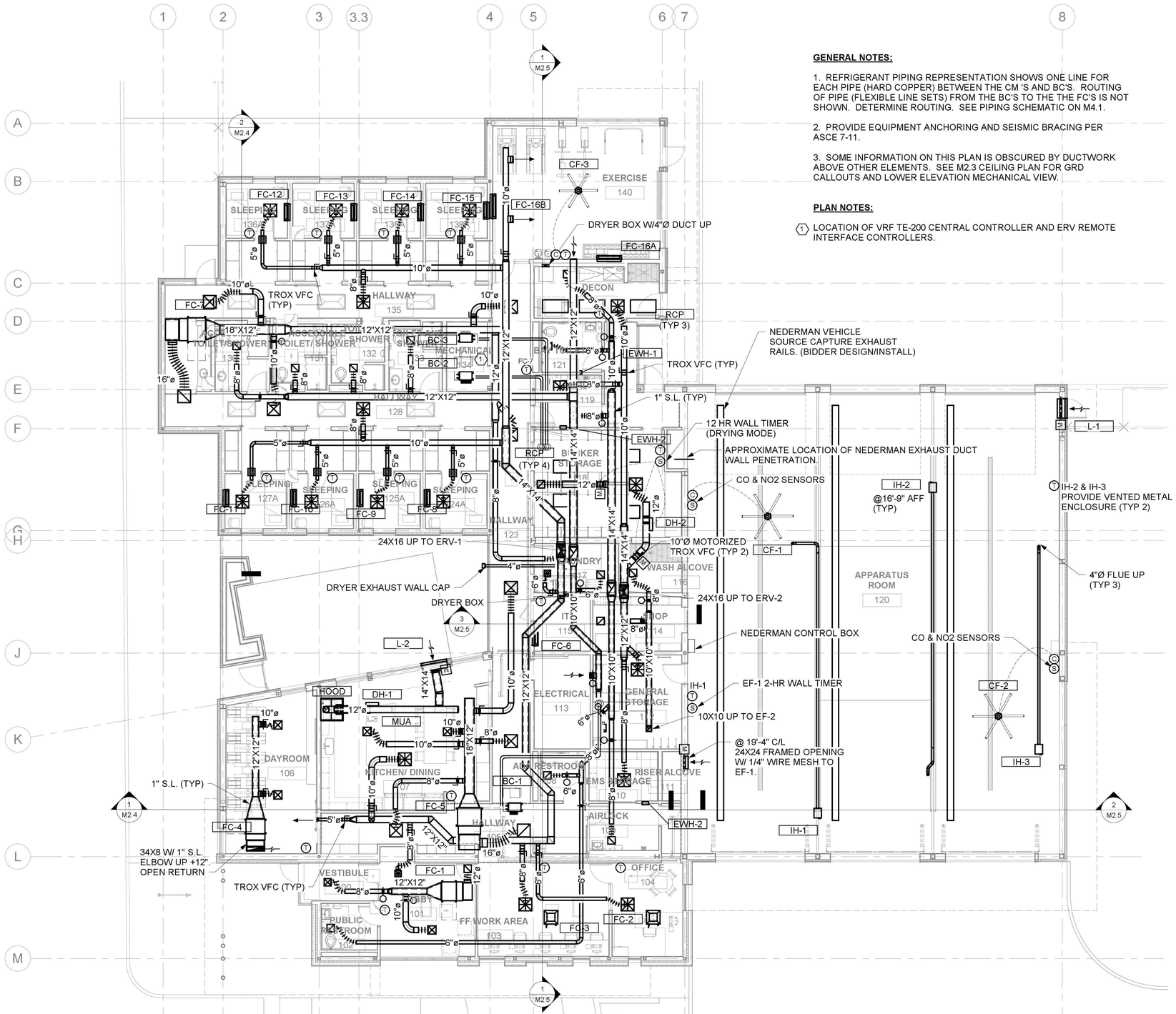

1 FLOOR PLAN
1/8" = 1'-0"

GENERAL NOTES:

1. REFRIGERANT PIPING REPRESENTATION SHOWS ONE LINE FOR EACH PIPE (HARD COPPER) BETWEEN THE CM 'S AND BC'S. ROUTING OF PIPE (FLEXIBLE LINE SETS) FROM THE BC'S TO THE THE FC'S IS NOT SHOWN. DETERMINE ROUTING. SEE PIPING SCHEMATIC ON M4.1.

2. PROVIDE EQUIPMENT ANCHORING AND SEISMIC BRACING PER ASCE 7-11.

3. SOME INFORMATION ON THIS PLAN IS OBSCURED BY DUCTWORK ABOVE OTHER ELEMENTS. SEE M2.3 CEILING PLAN FOR GRD CALLOUTS AND LOWER ELEVATION MECHANICAL VIEW.

PLAN NOTES:

(1) LOCATION OF VRF TE-200 CENTRAL CONTROLLER AND ERV REMOTE INTERFACE CONTROLLERS.

SIDER+BYERS
MECHANICAL + ELECTRICAL ENGINEERS
192 Nickerson, Suite #300
Seattle, Washington 98109
Phone: 206.285.2966

TCA
ARCHITECTURE + PLANNING + DESIGN
6211 ROOSEVELT WAY NORTHEAST
SEATTLE, WA 98115
tel: (206) 522-3830
fax: (206) 522-2456

BID SET

No.	Description	Date:

Project Title:

Fire Station 24
City of Kirkland
Kirkland, Washington

Sheet Title:

MECHANICAL FLOOR PLAN

Scale: 1/8" = 1'-0"
Project No. : 18040
Date : JULY 21, 2020

Sheet Number :

M2.1

Provided to Builders Exchange of WA, Inc. For usage Conditions Agreement see www.bxwa.com - Always Verify Scal

SIDER+BYERS
MECHANICAL + ELECTRICAL ENGINEERS
192 Nickerson, Suite #300
Seattle, Washington 98109
Phone: 206.285.2966

TCA
ARCHITECTURE + PLANNING + DESIGN
6211 ROOSEVELT WAY
NORTHEAST
SEATTLE, WA 98115
tel: (206) 522-3830
fax: (206) 522-2456

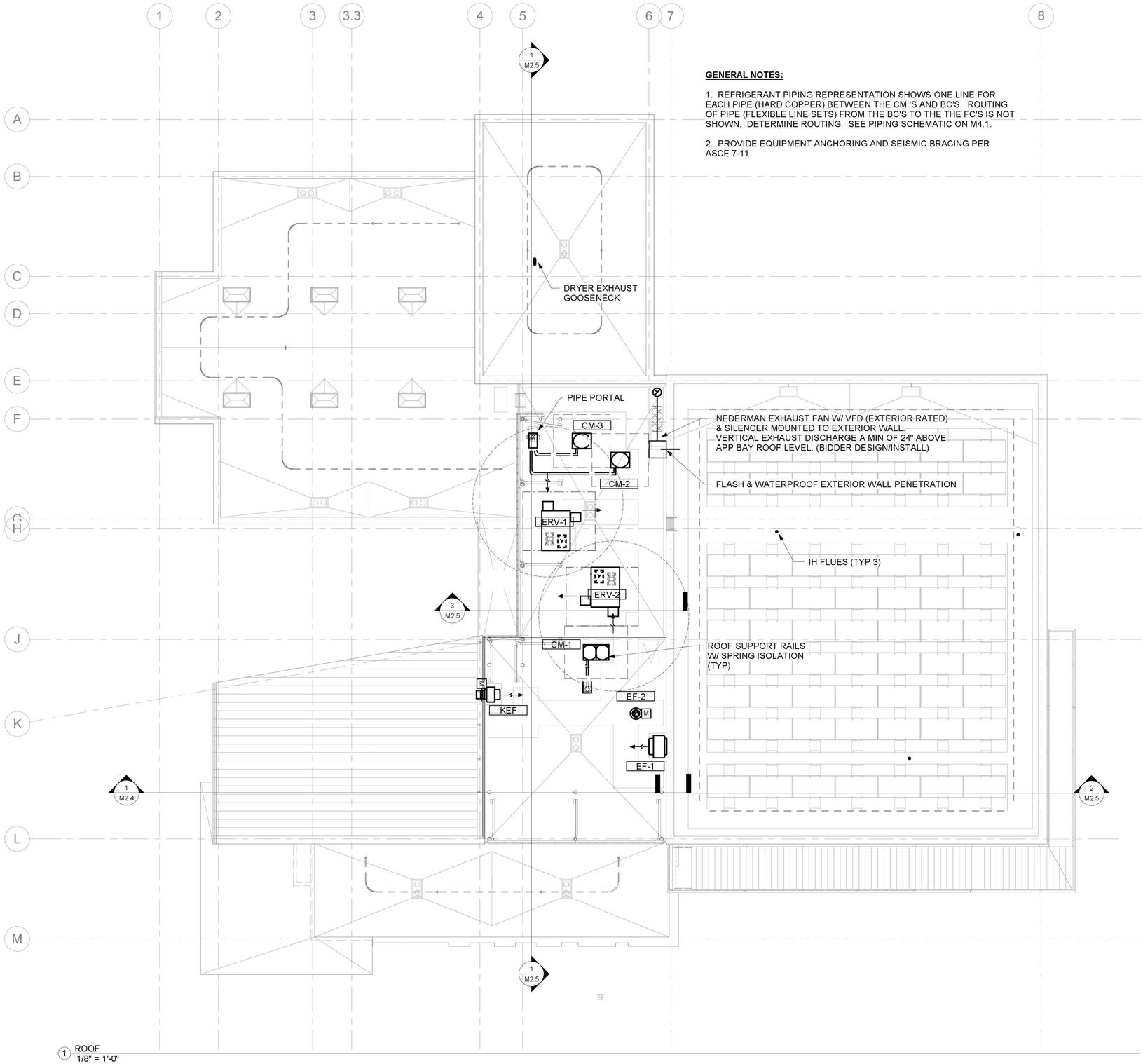

1 ROOF
1/8" = 1'-0"

GENERAL NOTES:

1. REFRIGERANT PIPING REPRESENTATION SHOWS ONE LINE FOR EACH PIPE (HARD COPPER) BETWEEN THE CM 'S AND BC'S. ROUTING OF PIPE (FLEXIBLE LINE SETS) FROM THE BC'S TO THE THE FC'S IS NOT SHOWN. DETERMINE ROUTING. SEE PIPING SCHEMATIC ON M4.1.

2. PROVIDE EQUIPMENT ANCHORING AND SEISMIC BRACING PER ASCE 7-11.

BID SET

No.	Description	Date:

Project Title:

Fire Station 24
City of Kirkland
Kirkland, Washington

Sheet Title:

MECHANICAL ROOF PLAN

Scale: 1/8" = 1'-0"
Project No. : 18040
Date : JULY 21, 2020

Sheet Number :

M2.2

Provided to Builders Exchange of WA, Inc. For usage Conditions Agreement see www.bxwa.com - Always Verify Scal

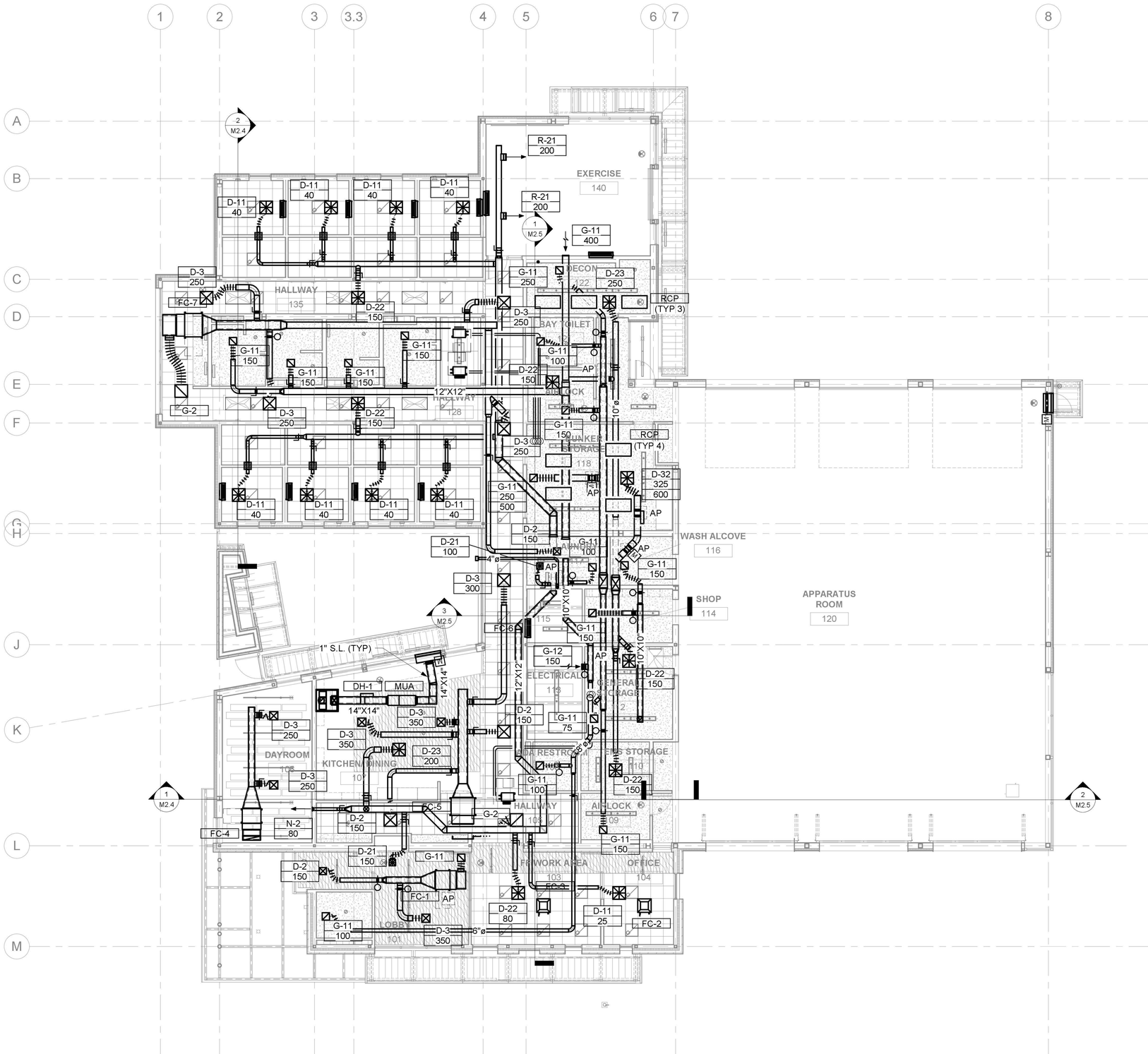

1 CEILING PLAN
1/8" = 1'-0"

SIDER+BYERS
MECHANICAL + ELECTRICAL ENGINEERS
192 Nickerson, Suite #300
Seattle, Washington 98109
Phone: 206.285.2966

TCA
ARCHITECTURE + PLANNING + DESIGN
6211 ROOSEVELT WAY
NORTHEAST
SEATTLE, WA 98115
tel: (206) 522-3830
fax: (206) 522-2456

BID SET

No.	Description	Date:

Project Title:

Fire Station 24
City of Kirkland
Kirkland, Washington

Sheet Title:

MECHANICAL CEILING PLAN

Scale: 1/8" = 1'-0"
Project No. : 18040
Date : JULY 21, 2020

Sheet Number :

M2.3

Provided to Builders Exchange of WA, Inc. For usage Conditions Agreement see www.bxwa.com - Always Verify Scal

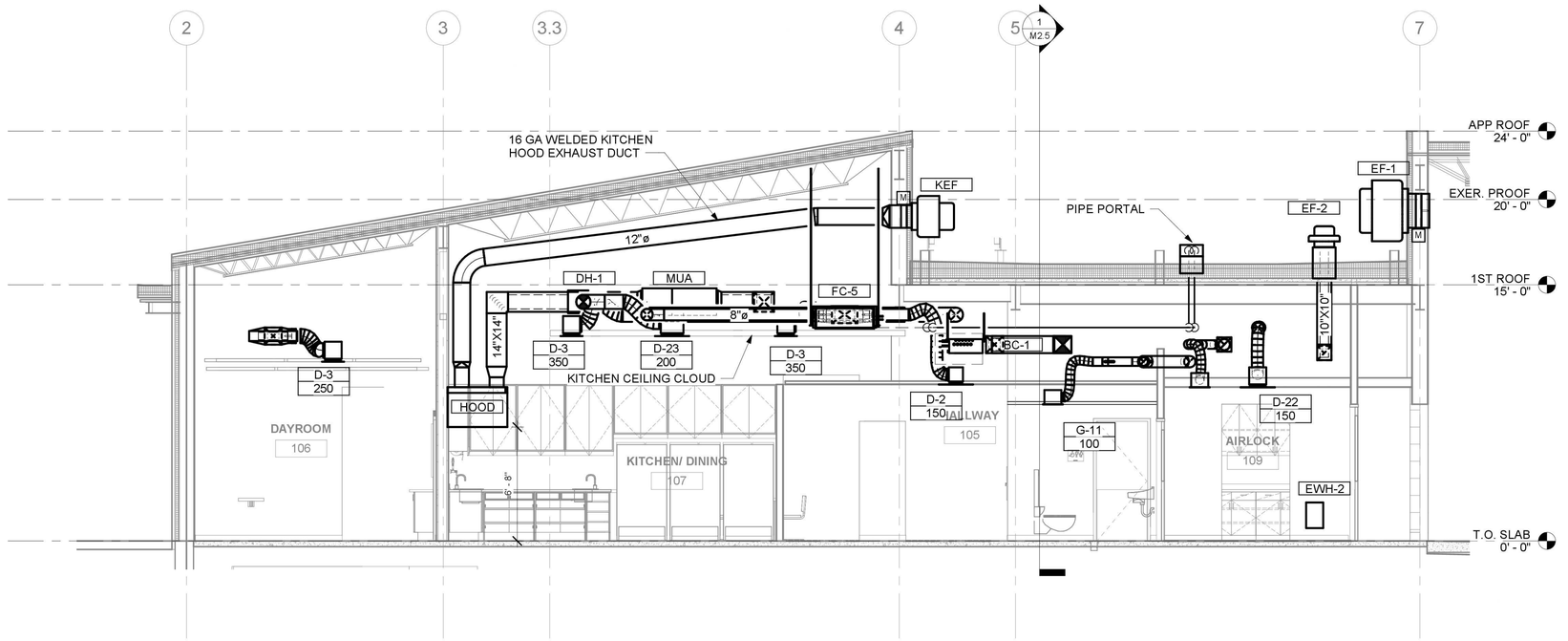

1 KITCHEN
1/4" = 1'-0"

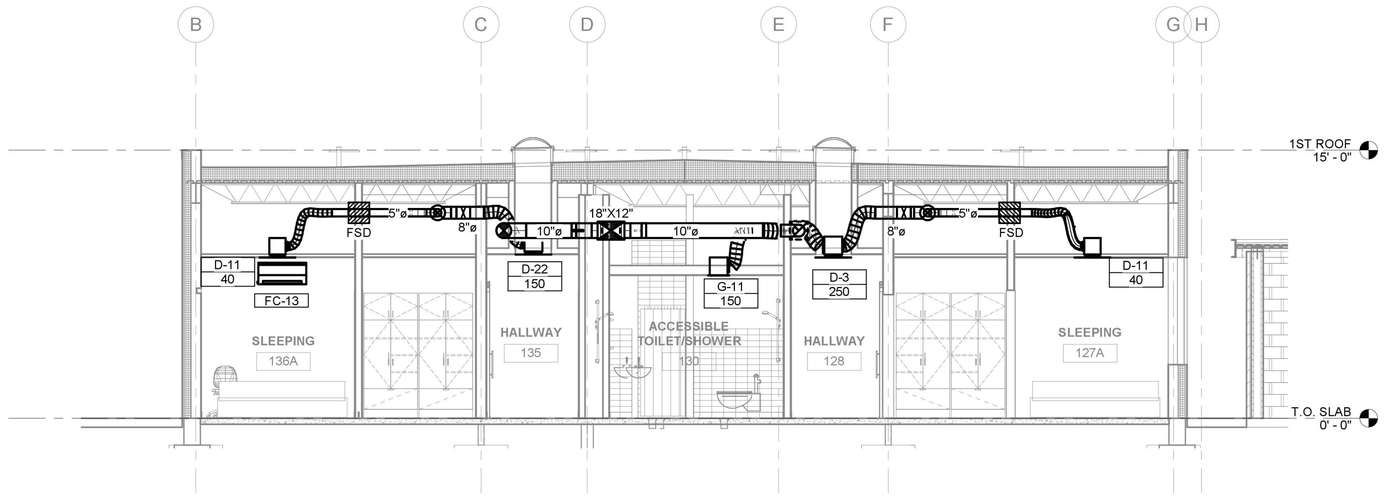

2 SLEEPING
1/4" = 1'-0"

SIDER+BYERS
MECHANICAL + ELECTRICAL ENGINEERS
192 Nickerson, Suite #300
Seattle, Washington 98109
Phone: 206.285.2966

TCA
ARCHITECTURE + PLANNING + DESIGN
6211 ROOSEVELT WAY
NORTHEAST
SEATTLE, WA 98115
tel: (206) 522-3830
fax: (206) 522-2456

BID SET

No.	Description	Date:

Project Title:

Fire Station 24
City of Kirkland
Kirkland, Washington

Sheet Title:

SECTIONS

Scale: 1/4" = 1'-0"
Project No. : 18040
Date : JULY 21, 2020

Sheet Number :

M2.4

Provided to Builders Exchange of WA, Inc. For usage Conditions Agreement see www.bxwa.com - Always Verify Scal

SIDER+BYERS
MECHANICAL + ELECTRICAL ENGINEERS
192 Nickerson, Suite #300
Seattle, Washington 98109
Phone: 206.285.2966

TCA
ARCHITECTURE + PLANNING + DESIGN
6211 ROOSEVELT WAY
NORTHEAST
SEATTLE, WA 98115
tel: (206) 522-3830
fax: (206) 522-2456

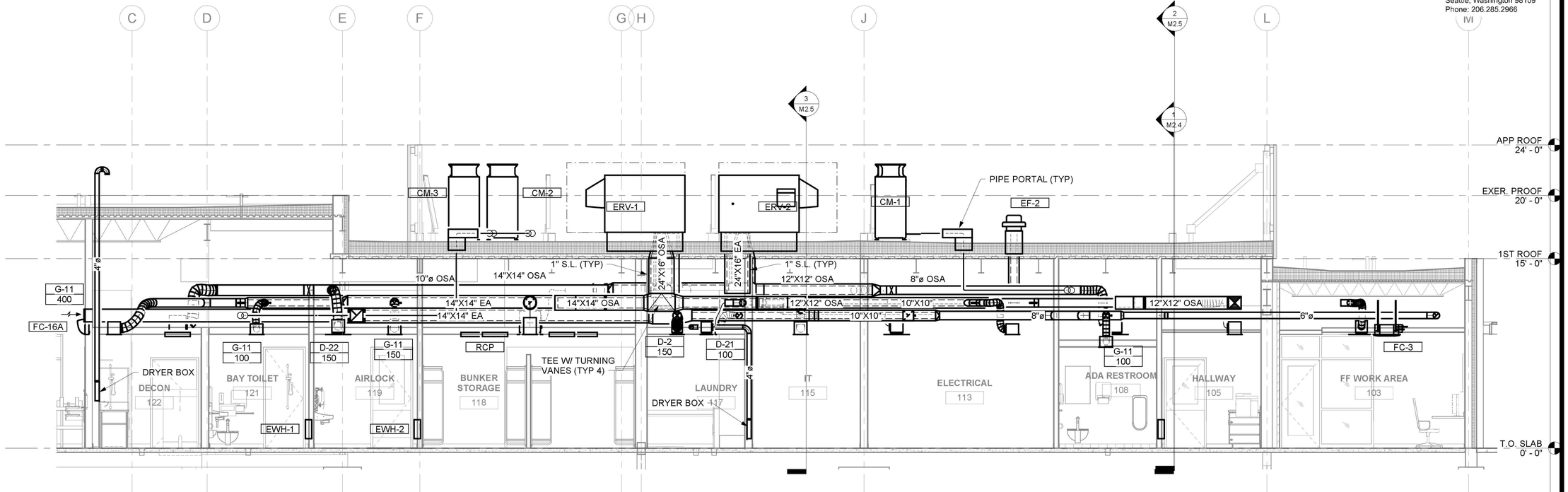

1 MECHANICAL WELL
1/4" = 1'-0"

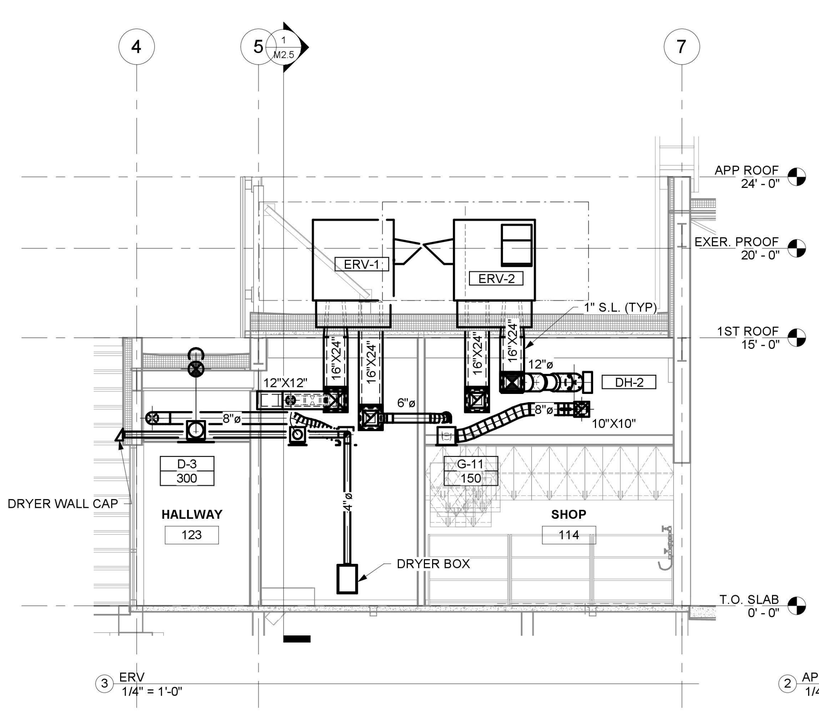

3 ERV
1/4" = 1'-0"

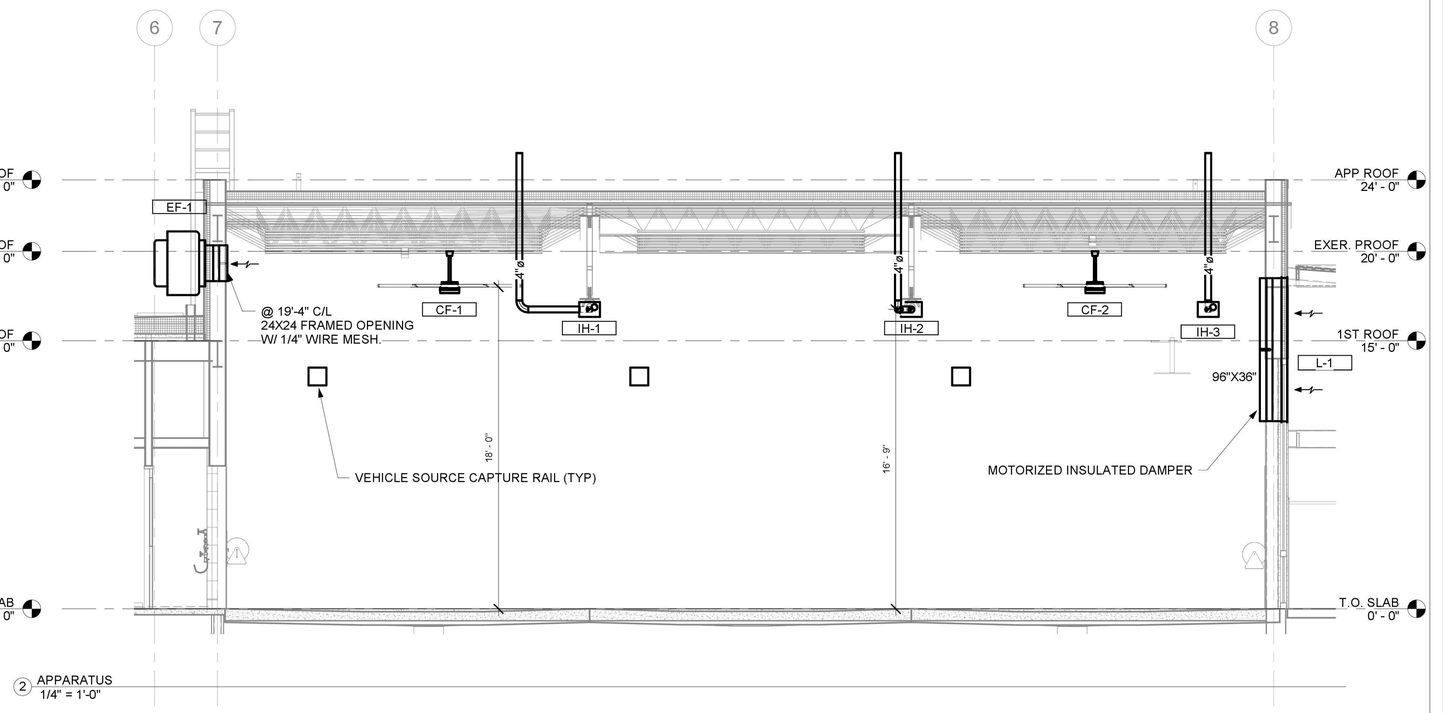

2 APPARATUS
1/4" = 1'-0"

BID SET

No.	Description	Date:

Project Title:

Fire Station 24

City of Kirkland
Kirkland, Washington

Sheet Title:

SECTIONS

Scale: 1/4" = 1'-0"
Project No. : 18040
Date : JULY 21, 2020

Sheet Number :

M2.5

Provided to Builders Exchange of WA, Inc. For usage Conditions Agreement see www.bxwa.com - Always Verify Scal

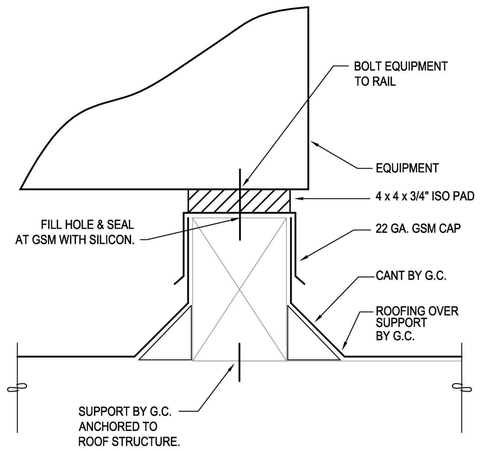

DETAIL TYPICAL FOR UTILITY FAN AND CONDENSING UNIT SUPPORT. DUCT SUPPORT SIMILAR.

1 M3.1 RAIL SUPPORT DETAIL

Scale: NONE

NOTE:

MECH. CONTRACTOR TO HIRE THIRD PARTY STRUCTURAL ENGINEER TO PROVIDE EXACT NUMBER AND SIZE OF BOLTS/FASTENERS AND PROVIDE EQUIPMENT SEISMIC CALCULATIONS.

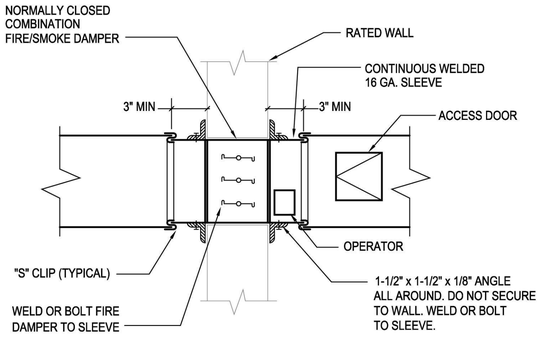

NOTE

ELECTRICAL POWER CONNECTION REQUIRED

COORDINATE W/ ELECTRICAL SECTION OF WORK

2 M3.1 U.L. LISTED COMBINATION FIRE/SMOKE DAMPER

N.T.S.

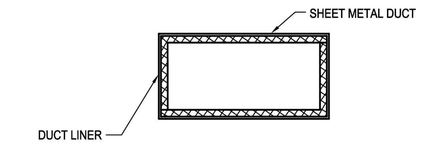

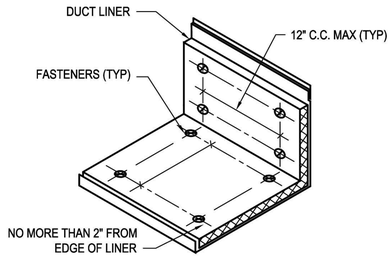

NOTES:

1. PROVIDE S/M NOSING AT EXPOSED EDGES OF INSULATION.
2. ALL TRANSVERSE AND LONGITUDINAL ENDS OF LINER TO BE COATED WITH ADHESIVE.

3 M3.1 DUCT LINER DETAIL

N.T.S.

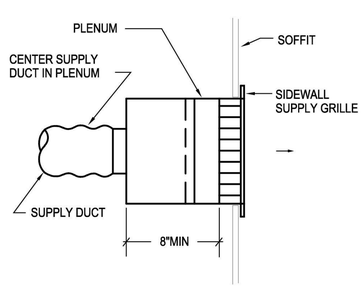

4 M3.1 SIDEWALL SUPPLY GRILLE

N.T.S.

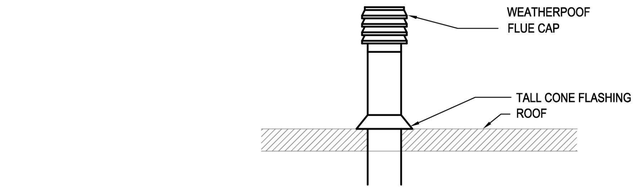

5 M3.1 FLUE VENT DETAIL

N.T.S.

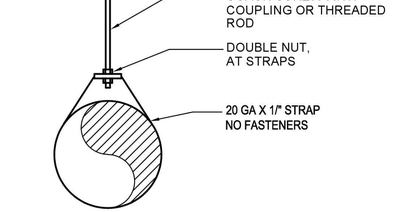

EXPOSED SPIRAL DUCT HANGING DETAIL

6 M3.1 **Scale: NONE**

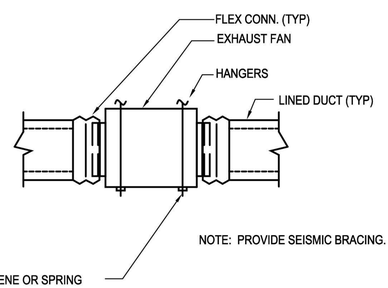

7 M3.1 INLINE EXHAUST FAN DETAIL

Scale: NONE

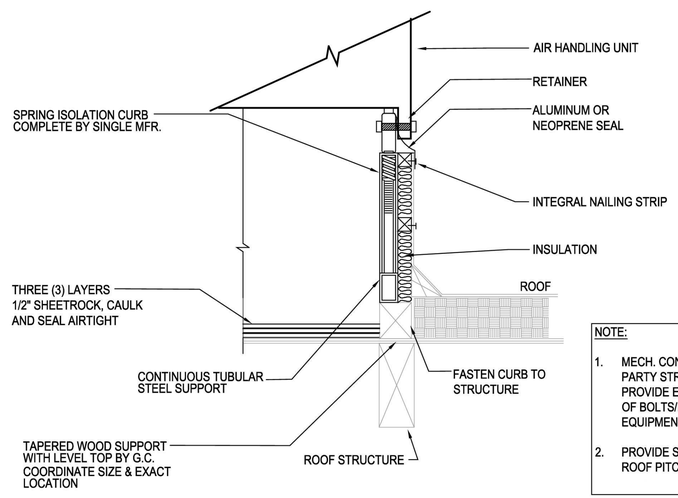

NOTE:

1. MECH. CONTRACTOR TO HIRE THIRD PARTY STRUCTURAL ENGINEER TO PROVIDE EXACT NUMBER AND SIZE OF BOLTS/FASTENERS AND PROVIDE EQUIPMENT SEISMIC CALCULATIONS.
2. PROVIDE SLOPED CURB TO MATCH ROOF PITCH.

8 M3.1 SPRING ISOLATION CURB (MASON SRSC)

N.T.S.

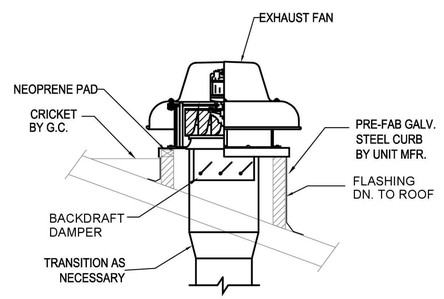

ROOF EXHAUST FAN DETAIL

9 M3.1 **Scale: NONE**

SIDER+BYERS
MECHANICAL + ELECTRICAL ENGINEERS
192 Nickerson, Suite #300
Seattle, Washington 98109
Phone: 206.285.2966

TCA
ARCHITECTURE + PLANNING + DESIGN
6211 ROOSEVELT WAY NORTHEAST
SEATTLE, WA 98115
tel: (206) 522-3830
fax: (206) 522-2456

BID SET

No.	Description	Date:

Project Title:

FIRE STATION 24

City of Kirkland
Kirkland, Washington

Sheet Title:

DETAILS

Scale: 1/8"=1'-0"

Project No. : 18040

Date : JULY 21, 2020

Sheet Number :

M3.1

Provided to Builders Exchange of WA, Inc. For usage Conditions Agreement see www.bxwa.com - Always Verify Scal

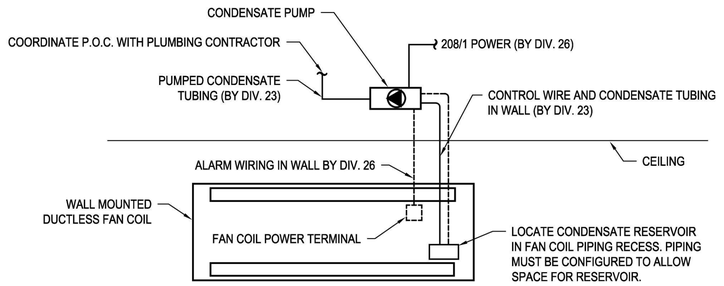

NOTE:
EXTERNAL COVERS FOR CONDENSATE COMPONENTS ARE NOT ACCEPTABLE AND WILL NOT BE ALLOWED. ALL COMPONENTS SHALL BE FULLY CONCEALED.

WALL MOUNTED DUCTLESS FAN COIL CONDENSATE PUMP (CONCEALED)

1 / M3.2 — N.T.S.

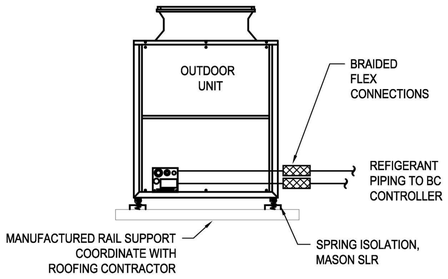

NOTE:

MECH. CONTRACTOR TO HIRE THIRD PARTY STRUCTURAL ENGINEER TO PROVIDE EXACT NUMBER AND SIZE OF BOLTS/FASTENERS AND PROVIDE EQUIPMENT SEISMIC CALCULATIONS.

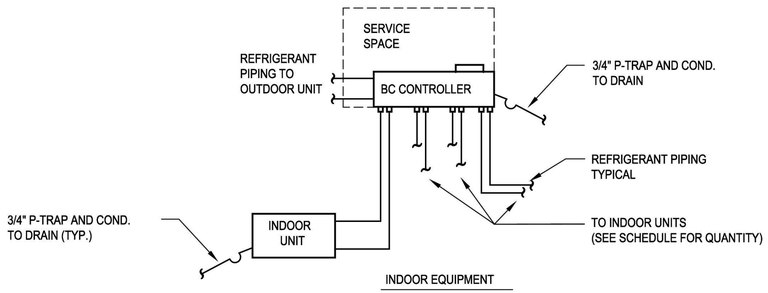

NOTE:

1. INSULATE BOTH LIQUID AND VAPORS LINES THROUGH OUT SYSTEM.
2. SECURE OUTDOOR UNIT TO SUPPORT.
3. SIZE REFRIGERANT LINES BASED ON MITSUBISHI SYSTEM CALCULATIONS. SEE M4.2
4. VERIFY ROUTING FOR REFRIGERANT PIPING AND CONDENSATE DRAINS.

VRFZ SYSTEM

4 / M3.2 — N.T.S.

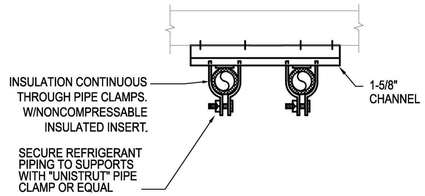

NOTE:
QUANTITY OF PIPES SHOWN REPRESENATIVE ONLY, PROVIDE QUANITY OF PIPES REQUIRED.

REFRIGERANT PIPE SUPPORT

2 / M3.2 — N.T.S.

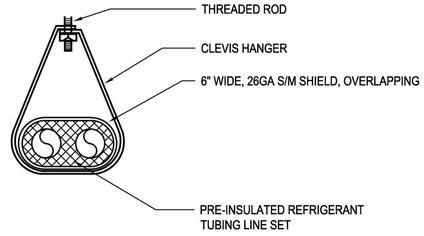

REFRIGERANT PIPE SUPPORT

5 / M3.2 — N.T.S.

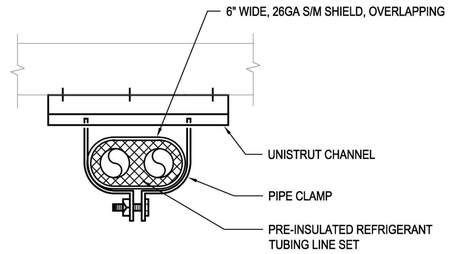

REFRIGERANT PIPE SUPPORT

7 / M3.2 — N.T.S.

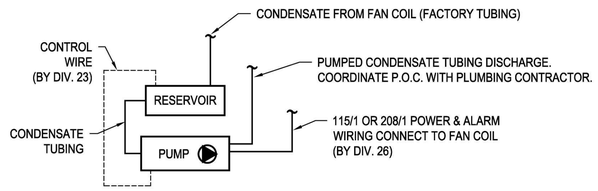

NOTE:
TYPICAL FOR DUCTED FAN COILS (WITHOUT FACTORY CONDENSATE PUMP).

FAN COIL CONDENSATE PUMP

8 / M3.2 — N.T.S.

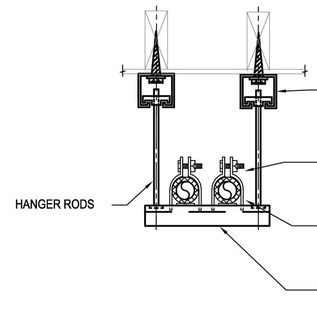

NOTE:
QUANTITY OF PIPES SHOWN REPRESENATIVE ONLY, PROVIDE QUANITY OF PIPES REQUIRED.

SUSPENDED REFRIGERANT PIPE SUPPORT

3 / M3.2 — N.T.S.

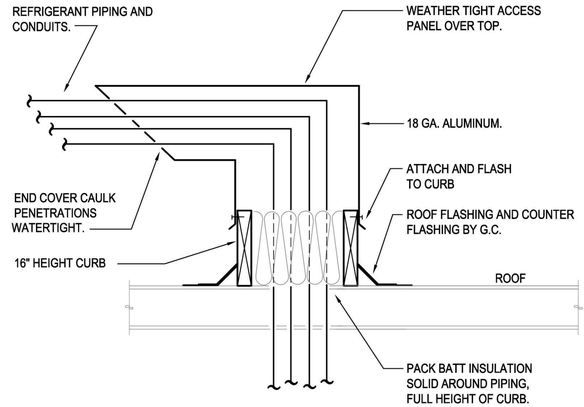

NOTE: SIMILAR DETAIL FOR CONDENSER WATER PIPING FROM LEESON FLUID COOLER.

REFRIGERANT PIPE PORTAL

6 / M3.2 — N.T.S.

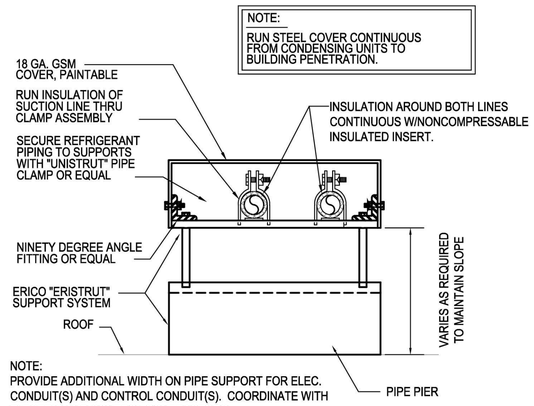

NOTE:
PROVIDE ADDITIONAL WIDTH ON PIPE SUPPORT FOR ELEC. CONDUIT(S) AND CONTROL CONDUIT(S). COORDINATE WITH ELECTRIC AND CONTROL CONTRACTORS.

ROOF REFRIGERANT PIPE SUPPORT

9 / M3.2 — N.T.S.

SIDER+BYERS
MECHANICAL+ELECTRICAL ENGINEERS
192 Nickerson, Suite #300
Seattle, Washington 98109
Phone: 206.285.2966

TCA
ARCHITECTURE + PLANNING + DESIGN
6211 ROOSEVELT WAY NORTHEAST
SEATTLE, WA 98115
tel: (206) 522-3830
fax: (206) 522-2456

BID SET

No.	Description	Date:

Project Title:

FIRE STATION 24

City of Kirkland
Kirkland, Washington

Sheet Title:

DETAILS

Scale: 1/8"=1'-0"
Project No. : 18040
Date : JULY 21, 2020
Sheet Number :

M3.2

Provided to Builders Exchange of WA, Inc. For usage Conditions Agreement see www.bxwa.com - Always Verify Scal

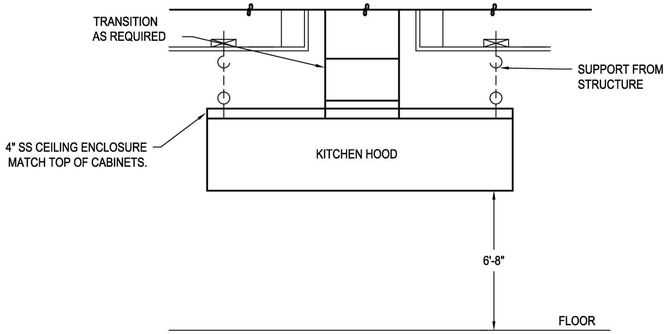

3 M3.3 KITCHEN HOOD DETAIL

N.T.S.

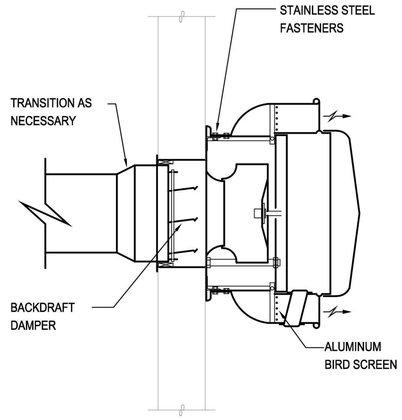

2 M3.3 SIDE WALL EXHAUST FAN DETAIL

N.T.S.

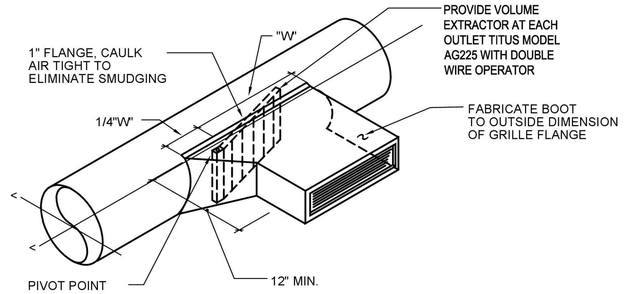

1 M3.3 SIDE WALL SUPPLY GRILLE DETAIL

N.T.S.

GENERAL NOTES FOR KITCHEN HOOD EXHAUST SYSTEM

1. EXHAUST DUCT SHALL BE CONSTRUCTED OF NOT LESS THAN 0.055 INCH (NO. 16 MANUFACTURER'S STANDARD GAUGE) STEEL.

2. ALL EXHAUST DUCT JOINTS AND SEAMS SHALL BE MADE WITH CONTINUOUS LIQUID TIGHT WELD OR BRAZE MADE ON EXTERNAL SURFACE OF THE DUCT SYSTEM. DUCT CONNECTION TO HOOD SHALL BE CONTINUOUS LIQUID-TIGHT WELD OR BRAZE, SMOOTH WITHOUT LEDGE GREASE TRAP.

3. DUCT SYSTEM SHALL BE SO CONSTRUCTED AND INSTALLED THAT GREASE CANNOT BECOME POCKETED IN ANY PORTION THEREOF, AND THE SYSTEM SHALL SLOPE NOT LESS THAN 1/4 INCH PER LINEAR FOOT TOWARDS THE HOOD.

4. EXHAUST DUCT SHALL TERMINATE WITH A FLANGE AND GASKET AT BASE OF EXHAUST FAN.

5. PRIOR TO DUCT CONCEALMENT PERFORM LIGHT LEAKAGE TEST ON ENTIRE DUCT AND DUCT TO HOOD CONNECTION.

6. UPON SYSTEM COMPLETION PERFORM SMOKE CAPTURE AND CONTAINMENT TEST.

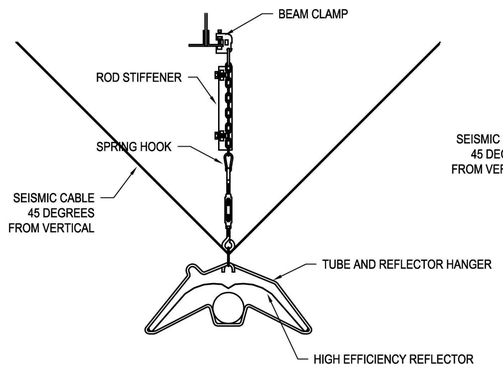

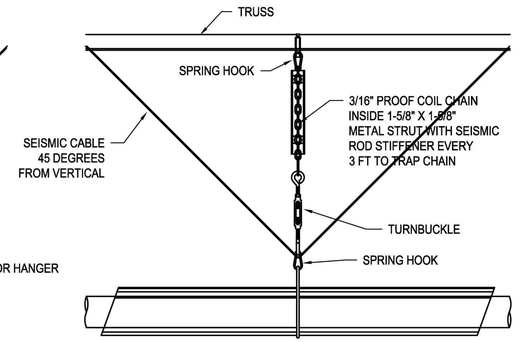

NOTE: SEE MANUFACTURER'S INSTALLATION MANUAL FOR SPECIFIC REQUIREMENTS.

4 M3.3 INFRARED TUBE HEATER HANGING DETAIL

N.T.S.

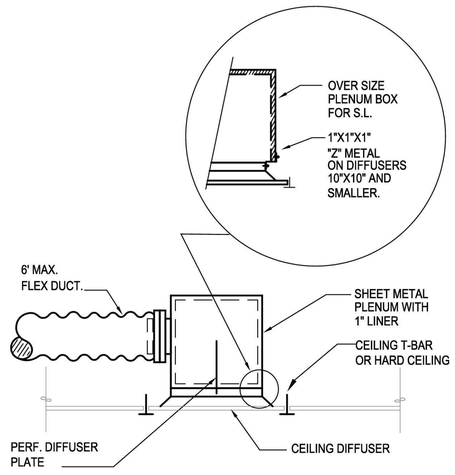

NOTES:
1. SEE ARCHITECTURAL PLANS FOR CEILING TYPES.
2. SUPPLY SHOWN, DETAIL WITHOUT PERF PLATE IS TYPICAL FOR CEILING RETURN OR EXHAUST GRILLE INSTALLATION.

6 M3.3 CEILING INSTALLATION TYPICAL DIFFUSER DETAIL

Scale: NONE

NOTE:

MECH. CONTRACTOR TO HIRE THIRD PARTY STRUCTURAL ENGINEER TO PROVIDE EXACT NUMBER AND SIZE OF BOLTS/FASTENERS AND PROVIDE EQUIPMENT SEISMIC CALCULATIONS.

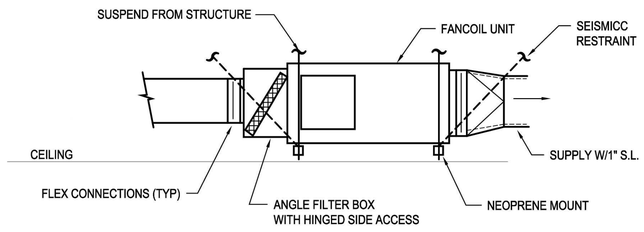

5 M3.3 FAN COIL DETAIL

N.T.S.

SIDER + BYERS
MECHANICAL + ELECTRICAL ENGINEERS
192 Nickerson, Suite #300
Seattle, Washington 98109
Phone: 206.285.2966

TCA
ARCHITECTURE + PLANNING + DESIGN
6211 ROOSEVELT WAY
NORTHEAST
SEATTLE, WA 98115
tel: (206) 522-3830
fax: (206) 522-2456

BID SET

No.	Description	Date:

Project Title:

FIRE STATION 24

City of Kirkland
Kirkland, Washington

Sheet Title:

DETAILS

Scale: 1/8"=1'-0"
Project No. : 18040
Date : JULY 21, 2020

Sheet Number :

M3.3

Provided to Builders Exchange of WA, Inc. For usage Conditions Agreement see www.bxwa.com - Always Verify Scal

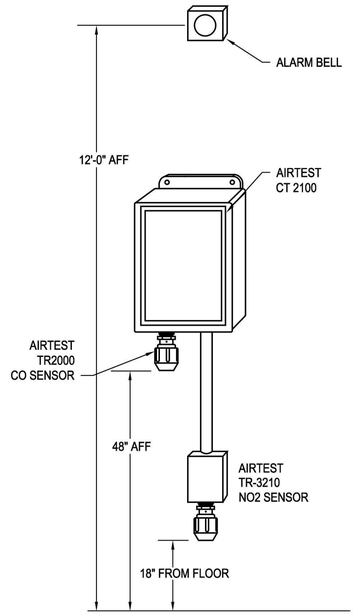

1 M3.4 CO/N02 DETECTOR DETAIL

N.T.S.

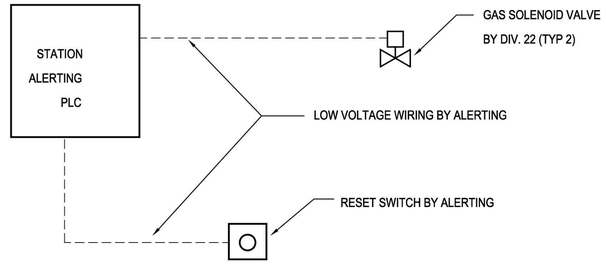

NOTE:
1. COORDINATE VOLTAGE OF VALVE WITH ALERTING CONTRACTOR..

(TYPICAL FOR BBQ & KITCHEN RANGE)

2 M3.4 GAS VALVE/RESET CONTROL

N.T.S.

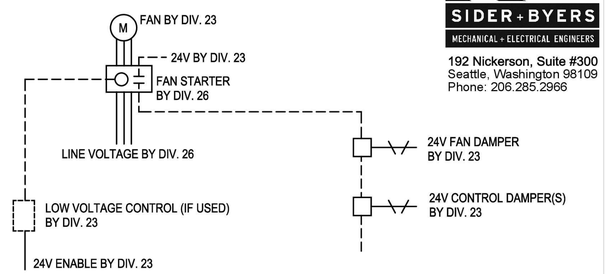

NOTES:
1. PROVIDE 24V DAMPERS FOR FAN AND ASSOCIATED CONTROL DAMPER(S).

3 M3.4 208/3 OR 460/3 FAN CONTROL

N.T.S.

NOTES:
1. PROVIDE 120V DAMPERS FOR FAN AND ASSOCIATED CONTROL DAMPER(S).

5 M3.4 120 VOLT FAN CONTROL

N.T.S.

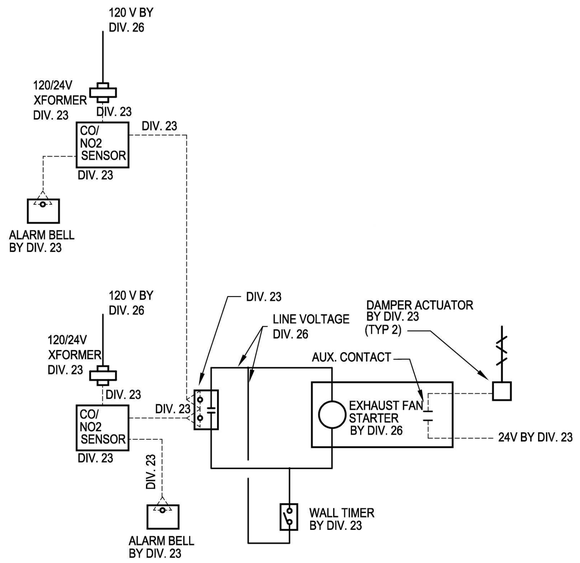

CO/NO2 (EF-1) SENSOR CONTROL SCHEMATIC

4 M3.4 Scale: NONE

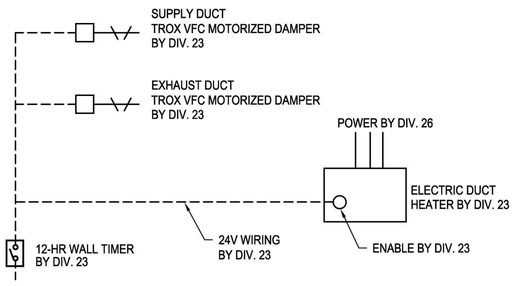

7 M3.4 BUNKER GEAR DRYING CONTROL

N.T.S.

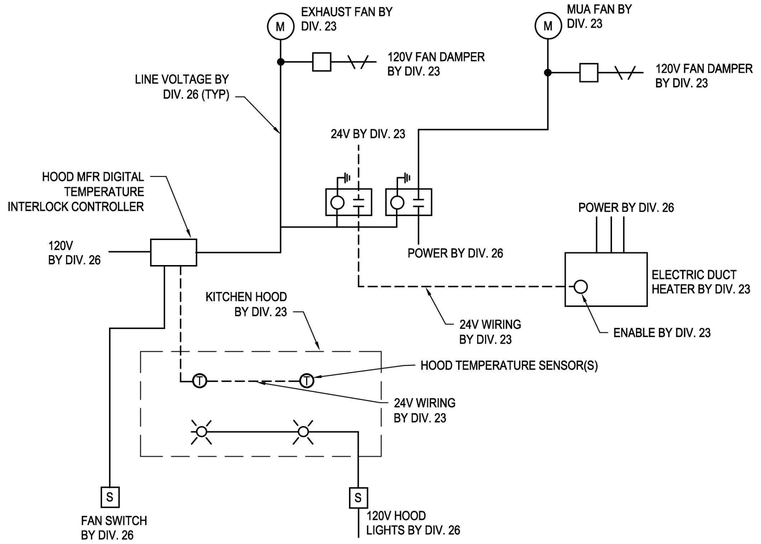

KITCHEN HOOD W/ TEMP INTERLOCK & MUA CONTROL

6 M3.4 N.T.S.

SIDER+BYERS
MECHANICAL + ELECTRICAL ENGINEERS
192 Nickerson, Suite #300
Seattle, Washington 98109
Phone: 206.285.2966

TCA
ARCHITECTURE + PLANNING + DESIGN
6211 ROOSEVELT WAY
NORTHEAST
SEATTLE, WA 98115
tel: (206) 522-3830
fax: (206) 522-2456

BID SET

No.	Description	Date:

Project Title:

FIRE STATION 24

City of Kirkland
Kirkland, Washington

Sheet Title:

DETAILS

Scale: 1/8"=1'-0"
Project No. : 18040
Date : JULY 21, 2020

Sheet Number :

M3.4

Provided to Builders Exchange of WA, Inc. For usage Conditions Agreement see www.bxwa.com - Always Verify Scal

Kirkland FS 24

DIAGRAM SYMBOL LEGEND	
DISPLAY	DESCRIPTION
/////	POWER WIRE
———	CONTROL WIRE
———	REF. PIPE

CONT.No | PAGE

CITY MULTI
SYSTEM SCHEMATIC DWG.

Additional refrigerant charge is needed depending on the size and length of extended piping. Please refer the amount of pre-charge and the formula of calculation which is mentioned on the data book.
1.25mm²(16 AWG) : 1.25mm²(16 AWG) or more. 0.75mm²(20 AWG) : between 0.5mm²(24 AWG) and 0.75mm²(20 AWG).

NOTE:
THIS IS A PRELIMINARY SYSTEM SCHEMATIC FOR REFERENCE ONLY. OBTAIN FINAL SCHEMATIC FROM VENDOR AFTER VERIFYING SYSTEM SELECTION AND PIPING RUNS.

PIPING AND CONTROLS	
SYMBOL	LIQUID PIPE/GAS PIPE SIZE
P1	1/4 / 1/2
P2	3/8 / 5/8
P3	/ 3/4 / 7/8
P4	/ 5/8 / 3/4
SYMBOL	MODEL NUMBER
MA	TAR-40MAAU

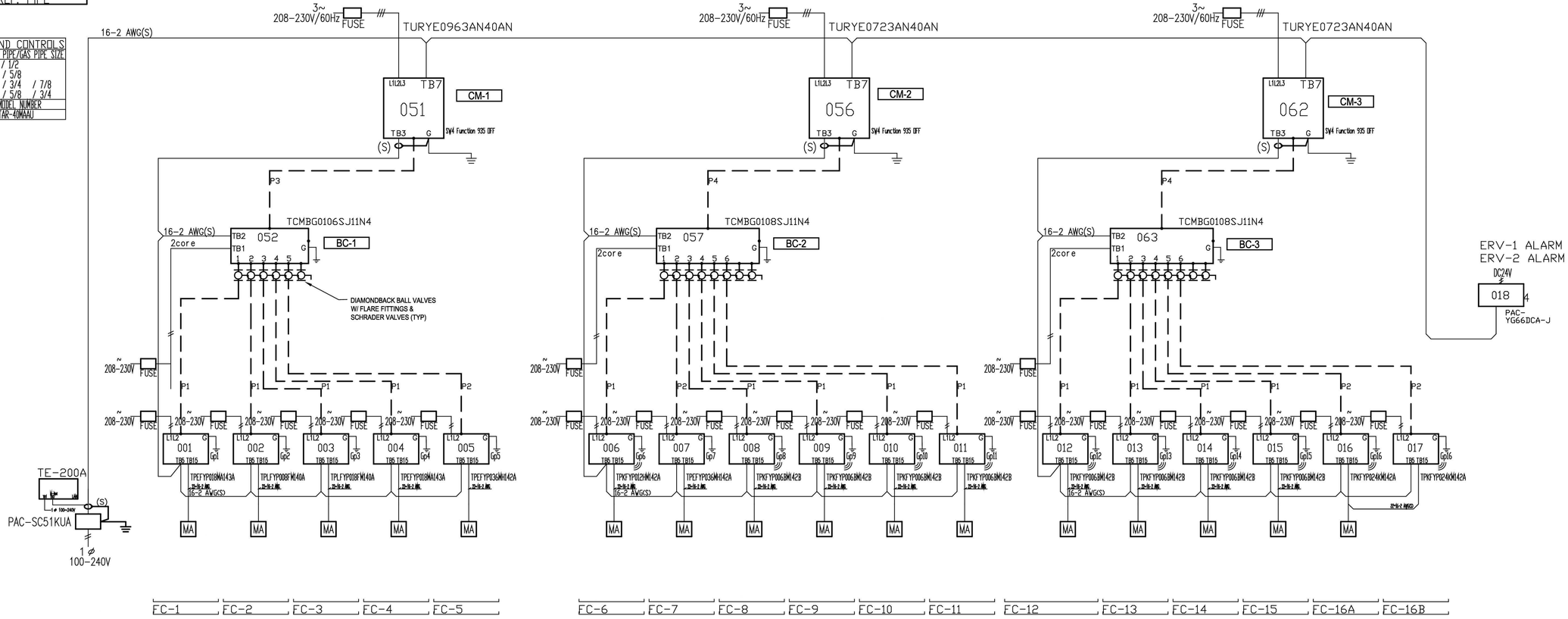

SIDER+BYERS
MECHANICAL + ELECTRICAL ENGINEERS
192 Nickerson, Suite #300
Seattle, Washington 98109
Phone: 206.285.2966

TCA
ARCHITECTURE + PLANNING + DESIGN
6211 ROOSEVELT WAY NORTHEAST
SEATTLE, WA 98115
tel: (206) 522-3830
fax: (206) 522-2456

BID SET

No.	Description	Date:

Project Title:

FIRE STATION 24
City of Kirkland
Kirkland, Washington

Sheet Title:

VRF DIAGRAM

Scale: 1/8"=1'-0"
Project No. : 18040
Date : JULY 21, 2020
Sheet Number :

M4.1

Provided to Builders Exchange of WA, Inc. For usage Conditions Agreement see www.bxwa.com - Always Verify Scal

PLUMBING SYMBOLS LEGEND

LINETYPE LEGEND

- EXISTING
- NEW WORK DARK/HEAVY

PIPING SYSTEM LABELS

- CW — COLD WATER
- HW — HOT WATER
- (140) — HOT WATER (TEMPERATURE)
- HWC — HOT WATER CIRCULATING
- SD — STORM DRAIN
- PW — PUMPED WASTE
- WASTE (BURIED)
- W — WASTE (ABOVE GRADE)
- GW — GREASE WASTE
- V — VENT
- RL — RAINLEADER
- OD — OVERFLOW DRAIN
- NPW — NON-POTABLE COLD WATER
- G OR P — NATURAL GAS OR PROPANE
- F — FIRE SERVICE
- DIRECTION OF FLOW
- CA — COMPRESSED AIR
- DI — DIONIZED WATER
- V — VACUUM
- C — CONDENSATE
- PC — PUMPED CONDENSATE
- X" — SLOPE SYMBOL (X' PER FOOT)

PIPE FITTINGS

- PIPE DOWN
- PIPE UP
- TEE UP
- TEE DOWN
- UNION
- PIPE ANCHOR POINT
- PIPE GUIDE
- FLANGE
- CAP

DRAINS AND CLEANOUTS

- FLOOR SINK
- FLOOR DRAIN
- HIDDEN FLOOR DRAIN
- ROOF DRAIN
- OVERFLOW DRAIN
- FLOOR CLEANOUT
- GRADE CLEANOUT
- TRENCH DRAIN
- WALL CLEANOUT
- UP TO CLEANOUT
- FUNNEL DRAIN
- STANDPIPE FUNNEL DRAIN

PIPE VALVES AND SPECIALTIES

- P-1 — PLUMBING EQUIPMENT
- X — MEDICAL TAG
- M-1 — DETAIL NUMBER / SHEET
- FLAG NOTE
- 1 — REVISION TAG
- 1 / P-1 — PLUMBING RISER NO. / SHEET
- 1 — SECTION NUMBER / SHEET NUMBER

PIPE VALVES AND SPECIALTIES

- GATE VALVE
- GLOBE VALVE
- NON RISING STEM VALVE
- RISING STEM GATE VALVE
- BALANCING VALVE (CIRCUIT SETTER)
- AUTOFLOW VALVE
- CHECK VALVE
- BALL VALVE
- PRESSURE REDUCING VALVE
- SOLENOID VALVE
- PRESSURE GAUGE
- THERMOMETER
- STRAINER
- SAFETY VALVE
- PIPING FLEXIBLE CONNECTIONS
- BUTTERFLY VALVE
- OR — CAP
- HOSE BIBB
- DOUBLE CHECK VALVE
- RPBA
- TRIPLE DUTY VALVE
- BALL VALVE MANUAL LEVER
- GLOBE VALVE MANUAL LEVER
- BALANCE VALVE (PRESSURE INDEPENDENT)
- PUMP
- M — METER
- M — METER

ABBREVIATIONS

ACT	ACOUSTICAL CEILING TILE
ADA	AMERICANS WITH DISABILITIES ACT
ADJ	ADJUSTABLE
AFF	ABOVE FINISHED FLOOR
AFG	ABOVE FINISHED GRADE
ALT	ALTERNATE
AP	ACCESS PANEL
APPROX	APPROXIMATE
ARCH	ARCHITECTURAL/ARCHITECT
AS	AIR SEPARATOR
AUX	AUXILIARY
BFF	BELOW FINISHED FLOOR
BFG	BELOW FINISHED GRADE
BHP	BRAKE HORSE POWER
BLDG	BUILDING
BOP	BOTTOM OF PIPE
BTU	BRITISH THERMAL UNIT
BTUH	BRITISH THERMAL UNIT PER HOUR
CA	COMBUSTION AIR
CLG	CEILING
CMU	CONCRETE MASONRY UNIT
CO	CLEANOUT
COND	CONDENSATE
CW	COLD WATER
CX	CONNECT TO EXISTING
dB	DECIBEL
DCVA	DOUBLE CHECK VALVE ASSEMBLY
DDCV	DOUBLE DETECTOR CHECK VALVE
DDCVA	DOUBLE DETECTOR CHECK VAVLE ASSEMBLY
DF	DRINKING FOUNTAIN
DFU	DRAINAGE FIXTURE UNIT
DHW	DOMESTIC HOT WATER
DHWC	DOMESTIC HOT WATER RECIRCULATION
Ø OR DIA	DIAMETER
DN	DOWN
DWG(S)	DRAWING(S)
DWV	DRAIN, WASTE, VENT
EA	EACH
EEW	EMERGENCY EYEWASH
EFF	EFFICIENCY
ELEV	ELEVATION
EQUIP	EQUIPMENT
ES	EMERGENCY SHOWER
ET	EXPANSION TANK
EX	EXISTING/EXISTING TO REMAIN
EXP	EXPANSION
FC	FAIL CLOSED
FCO	FLOOR CLEANOUT
FD	FLOOR DRAIN
FDC	FIRE DEPARTMENT CONNECTION
FF	FINISHED FLOOR
FLA	FULL LOAD AMPS
FM	FORCE MAIN
FO	FAIL OPEN
FP	FIRE PROTECTION
FPM	FEET PER MINUTE
FPS	FEET PER SECOND
FS	FLOOR SINK
FSZV	FIRE SPRINKLER ZONE VALVE ASSEMBLY
FT	FEET/FOOT
FTG	FOOTING
FV	FLUSH VALVE
G	NATURAL GAS
GA	GAUGE
GAL	GALLON
G.C.	GENERAL CONTRACTOR
GCO	GRADE CLEANOUT
GD	GARAGE DRAIN
GPF	GALLONS PER FLUSH
GPH	GALLONS PER HOUR
GPM	GALLONS PER MINUTE
GW	GREASE WASTE
H	HEIGHT
HB	HOSE BIBB
HBVB	HOSE BIBB VACUUM BREAKER
HD	HEAD
HP	HORSEPOWER
HS	HAND SINK
HW	HOT WATER
HX	HEAT EXCHANGER
IE	INVERT ELEVATION
IN	INCH/INCHES
KW	KILOWATT/KILOWATTS
LAV	LAVATORY
LBS	POUNDS
LF	LINEAL FOOT
LTG	LIGHTING
LWT	LEAVING WATER TEMPERATURE
MBH	1000 BRITISH THERMAL UNITS PER HOUR
MED	MEDIUM
MEP	MECHANICAL, ELECTRICAL, PLUMBING
MEZZ	MEZZANINE
MIN	MINIMUM
MISC	MISCELLANEOUS
N/A	NOT APPLICABLE
NC	NORMALLY CLOSED
NEG	NEGATIVE
NIC	NOT IN CONTRACT
NOM	NOMINAL
NPC	NON-POTABLE COLD WATER
NPCW	NON POTABLE COLD WATER
NPH	NON-POTABLE HOT WATER
NPHR	NON-POTABLE HOT WATER RETURN
NPT	NATIONAL PIPE THREAD
NTS	NOT TO SCALE
OD	OUTSIDE DIAMTER/OVERLOW DRAIN
OFCI	OWNER FURNISHED CONTRACTOR INSTALLED
OFOI	OWNER FURNISHED OWNER INSTALLED
ORD	OVERFLOW ROOF DRAIN
ORL	OVERFLOW RAINWATER LEADER
ΔP	PRESSURE DIFFERENTIAL
PD	PLANTER DRAIN; PRESSURE DROP
PERF	PERFORATED
PH	PHASE
PIV	POST INDICATOR VALVE
PLBG	PLUMBING
PRESS	PRESSURE
PRV	PRESSURE REDUCING VALVE
PSF	POUNDS PER SQUARE FOOT
PSI	POUNDS PER SQUARE INCH
PSIG	POUNDS PER INCH GAUGE
QTY	QUANTITY
RD	ROOF DRAIN
REQD	REQUIRED
RL	RAIN WATER LEADER
RM	ROOM
RPBP	REDUCED PRESSURE BACKFLOW PREVENTER
RPM	REVOLUTIONS PER MINUTE
RLX	RELOCATE EXISTING
RV	RELIEF VALVE
RX	REMOVE EXISTING
S	SINK
S	STORM
SCFM	STANDARD CUBIC FEET PER MINUT
SD	STORM DRAIN
SF	SQUARE FOOT
SFU	SUPPLY FIXTURE UNIT
SH	SHOWER
S.O.V.	SHUTOFF VALVE
SPEC	SPECIFICATION
S/S, OR SS	STAINLESS STEEL
STD	STANDARD
SYM	SYMBOL
T&P	TEMPERATURE AND PRESSURE RELIEF VALVE
TBD	TO BE DETERMINED
TD	TRENCH DRAIN
TEMP	TEMPERATURE
TOB	TOP OF BEAM
TOC	TOP OF CONCRETE
TOD	TOP OF DECK
TOJ	TOP OF JOIST
TOS	TOP OF SLAB/TOP OF STEEL
TP	TRAP PRIMER
T&P	TEMPERATURE & PRESSURE
TYP	TYPICAL
UL	UNDERWRITERS LABORATORY
UNO	UNLESS NOTED OTHERWISE
UR	URINAL
V	VENT(S)
V	VOLT
VERT	VERTICAL
VFD	VARIABLE FREQUENCY DRIVE
VIB	VALVE-IN-BOX
VTR	VENT THROUGH ROOF
W	WASTE/WATER
W/	WITH
W/IN	WITHIN
W/O	WITHOUT
WC	WATER CLOSET
WCO	WALL CLEANOUT
WH	WATER HEATER
WPD	WATER PRESSURE DROP
WT	WEIGHT
YCO	YARD CLEANOUT

SIDER+BYERS
MECHANICAL+ELECTRICAL ENGINEERS
192 Nickerson, Suite #300
Seattle, Washington 98109
Phone: 206.285.2966

PLUMBING NOTES

1. PLUMBING FIXTURES SHALL BE DESIGNED OR EQUIPPED TO MEET FOLLOWING MAXIMUM WATER USE EFFICIENCY STANDARDS:
   - A. WATER CLOSETS (DUAL FLUSH). 1.6 / 1.1 GPF
   - B. SHOWER HEADS 1.5 GPM
   - C. RESIDENTIAL LAVATORY FAUCETS. 1.5 GPM
   - D. PUBLIC LAVATORY FAUCETS. 0.5 GPM
   - E. KITCHEN SINK FAUCETS 1.5 GPM

   SINK AND LAVATORY DRAINS SHALL BE CHROME PLATED 17 GA. BRASS TUBING BY ENGINEERED BRASS, DEARBORN BRASS OR BRASSCRAFT. PROVIDE INSULATED P-TRAP AND SUPPLY COVERS (TRUEBRO OR EQUAL) AT ALL EXPOSED P-TRAPS AND SUPPLIES PER A.D.A. STANDARDS.
2. PLUMBING FIXTURE MOUNTING SHALL COMPLY WITH CONTRACT DOCUMENTS, ADA, AND WASHINGTON STATE ACCESSIBILITY CODE.
3. INSTALL WATER HAMMER ARRESTORS ON HOT & COLD WATER PIPING OF EACH FIXTURE GROUP AND AT ALL FIXTURES W/QUICK ACTING VALVES. UNITS SHALL BE ZURN "SHOKTROLL" OR EQUAL. SELECT UNIT SIZE AND LOCATION PER MANUFACTURERS RECOMMENDATIONS AND IN ACCORD WITH PDI STANDARD WH-201. PROVIDE ACCESS PANELS AT ARRESTORS ABOVE GWB CEILINGS. ALL ACCESS PANELS AND DOORS SHALL BE ELMDOR FAB. STEEL SLK SERIES OR EQUAL WITH 14 GAUGE DOOR AND FRAME. PROVIDE WITH CYLINDER LOCK, CONTINUOUS PIANO HINGE AND PRIME COATED READY FOR PAINTING.
4. COLD WATER AND HOT WATER PIPING SHALL BE INSULATED AND ROUTED FULL SIZE WITH APPROPRIATE SIZE REDUCTION AT POINT OF CONNECTION TO FIXTURE. 1/2" WATER LINE LIMITED TO 10'-0" DISTANCE FROM FIXTURE. "DEAD-LEGS" OR "FUTURE" STUBS ON ACTIVE POTABLE WATER LINES SHALL BE LIMITED TO 4" TO PREVENT STAGNANT WATER CONDITIONS.
5. INSTALL WATER PIPING ON WARM SIDE OF BUILDING INSULATION. SEE SPEC. FOR INSULATION SYSTEMS. SEE DWGS. FOR ELEC. HEAT TRACE REQUIREMENTS. SEE PLUMBING DETAILS FOR PIPE HANGER STYLE. SEE SPEC. FOR HANGER SPACING.
6. WHEN CONNECTING TO EXISTING BURIED WASTE PIPING VERIFY PROPER FLOW CONDITIONS BEFORE COVERING. BURIED WASTE & VENT PIPING SHALL BE MIN. 2" DIA. & SLOPED 1/4"/FT., UNLESS OTHERWISE NOTED. PVC OR ABS PIPING SHALL BE USED ONLY IF APPROVED BY ADMINISTRATIVE AUTHORITY, SEE SPECIFICATIONS FOR FURTHER INFO.
7. PROVIDE TRAP PRIMERS ON ALL FLOOR DRAINS EXCEPT IN SHOWER STALLS OR OTHERWISE NOTED ON DWGS. CONTRACTOR SHALL INSTALL ACCESS PANELS WHERE PRIMERS ARE CONCEALED IN WALLS.
8. COORDINATE VENT THROUGH ROOF (VTR) LOCATIONS WITH HVAC UNITS. MAINTAIN MIN. 10'-0" CLEARANCE. OFFSET VTR AS NECESSARY. COORDINATE PIPE ROUTING WITH HVAC AND SPRINKLER CONTRACTORS.
9. SITE WATER PRESSURE IS 100 PSI PER NORTHSHORE UTILITY DISTRICT.
10. RISER DIAGRAMS & PLANS DO NOT SHOW SOME PIPING OFFSETS REQUIRED FOR STRUCTURAL CLEARANCES. EXACT ROUTING MAY VARY FROM THAT INDICATED. ALL WASTE PIPING INCLUDING RISERS ON RESIDENTIAL LEVELS TO BE CAST IRON.
11. PROVIDE ELECTRIC HEAT TRACE UNDER PIPING INSULATION FOR ALL WATER PIPING INSTALLED IN UNHEATED GARAGE SPACES.
12. CONFIGURE PIPING FOR SUDS RELIEF AS REQUIRED BY THE UPC.
13. ALL LEVER CONTROLLED WATER CLOSETS TO BE INSTALLED WITH THE LEVER ON THE OPEN SIDE OF THE BATHROOM.

ENERGY CODE NOTES

1. SEE SCHEDULE FOR WATER HEATER EQUIPMENT TYPE, CAPACITY AND EFFICIENCY. MINIMUM EFFICIENCY SHALL MEET TABLE C404.2
2. PUBLIC LAVATORIES SHALL BE EQUIPPED WITH AN ASSE 1070 MIXING VALVE SET TO DELIVERY 110 F HOT WATER.
3. NONCIRCULATING HOT WATER SYSTEMS WITHOUT AN INTEGRAL HEAT TRAP SHALL BE PROVIDED WITH HEAT TRAPS ON THE SUPPLY AND DISCHARGE PIPING.
4. ELECTRIC WATER HEATERS IN UNCONDITIONED SPACES OR ON CONCRETE FLOORS SHALL BE PLACED ON INCOMPRESSIBLE R-10 INSULATION.
5. PROVIDE PIPE INSULATION PER ENERGY CODE SECTION C403.2.9 AND SPECIFICATION SECTION 22 07 00.
6. INSULATION EXPOSED TO WEATHER SHALL BE PROTECTED FROM DAMAGE, SUNLIGHT, MOISTURE AND WIND. PROVIDE JACKET AND ALUMINUM COVERS. ADHESIVE TAPE IS NOT PERMITTED.
7. ALL PIPE AND WRAP INSULATION SHALL BE LABELED WITH ITS THICKNESS AND INSULATING VALUE (R OR K).
8. THE MAXIMUM ALLOWABLE PIPING LENGTH FROM THE NEAREST SOURCE OF HOT WATER TO THE TERMINATION OF THE FIXTURE SUPPLY SHALL COMPLY WITH C404.3
9. CIRCULATING HOT WATER PUMPS OR HEAT TRACE SHALL BE EQUIPPED WITH AUTOMATIC TIMERS.

TCA
ARCHITECTURE + PLANNING + DESIGN
6211 ROOSEVELT WAY NORTHEAST
SEATTLE, WA 98115
tel: (206) 522-3830
fax: (206) 522-2456

BID SET

No.	Description	Date:

Project Title:

FIRE STATION 24

City of Kirkland
Kirkland, Washington

Sheet Title:

COVER SHEET

Scale: 1/8"=1'-0"
Project No. : 18040
Date : JULY 21, 2020
Sheet Number :

P1.0

Provided to Builders Exchange of WA, Inc. For usage Conditions Agreement see www.bxwa.com - Always Verify Scal

SIDER+BYERS
MECHANICAL + ELECTRICAL ENGINEERS
192 Nickerson, Suite #300
Seattle, Washington 98109

PLUMBING FIXTURE SCHEDULE

MARK	ITEM	MFR: MODEL	DESCRIPTION
WC-1	WATER CLOSET	KOHLER: 4325	WALL-MOUNT, SIPHON JET, ELONG. RIM., VIT. CHINA, 1 1/2" TOP SPUD, WHITE. MOUNT AT 15" RIM HEIGHT. PROVIDE WITH 1000LB RATED CARRIER.
	SEAT	BEMIS: 1955 C	WHITE PLASTIC, OPEN FRONT, W/O COVER.
	FLUSH VALVE	SLOAN: WES-111	DUAL-FLUSH VALVE. PROVIDES 1.6 GPF FOR SOLID WASTE & 1.1 GPF FOR LIQUID WASTE. ANTI-MICROBIAL HANDLE.
WC-2 (ADA)	WATER CLOSET	KOHLER: 4325	WALL-MOUNT, SIPHON JET, ELONG. RIM., VIT. CHINA, 1 1/2" TOP SPUD, WHITE. MOUNT AT 17" RIM HEIGHT. INSTALL FLUSH VALVE HANDLE TOWARDS OPEN SIDE OF RESTROOM PER ADA REQUIREMENTS. PROVIDE WITH 1000LB RATED CARRIER.
	SEAT	BEMIS: 1955 C	WHITE PLASTIC, OPEN FRONT, W/O COVER.
	FLUSH VALVE	SLOAN: WES-111	DUAL-FLUSH VALVE. PROVIDES 1.6 GPF FOR SOLID WASTE & 1.1 GPF FOR LIQUID WASTE. ANTI-MICROBIAL HANDLE.
UR-1	URINAL	KOHLER: K-5452-ET	WALL MOUNT, SIPHON JET, VIT. CHINA, 3/4" TOP SPUD, 0.125 GAL. FLUSH, WHITE, A.D.A. COMPLIANT. SEE ARCH DWGS. FOR MOUNTING HEIGHTS. WATERSENSE LABELED.
	VALVE	SLOAN: ROYAL 186-0.125 DBP	EXPOSED FLUSHOMETER. 0.125 GPF WATERSENSE LABELED.
LAV-1	LAVATORY	KOHLER: K-2211-G-0	19" X 15" OVAL, UNDERMOUNT, VIT. CHINA, 3 HOLES ON 4" CTRS, WHITE.
	FAUCET	DELTA: 523LF-HDF	5" SPOUT, SGL. LEVER HANDLE, 4" CENTERS, POP-UP DRAIN ASSEMBLY, 0.5 GPM AERATOR, CHROME
	DRAIN	CHICAGO:	PERFORATED STRAINER. INSULATE DRAIN AND WATER PIPING PER ADA.
	LAVATORY MIXING VALVE	SYMMONS: 7-210-CK	THERMOSTATIC MIXING VALVE, INTEGRAL CHECKS, 3/8" INLETS AND OUTLET, PROVIDE WHITE ENAMEL WALL CABINET AND MOUNT BELOW LAVATORIES. MUST COMPLY WITH ASSE 1070.
LAV-2	LAVATORY	KOHLER: K-2005-4	21-1/4" X 18-1/8", WALL MOUNT, VIT. CHINA, 3 HOLES ON 4" CTRS, WHITE, CONCEALED ARM CARRIER, ADA.
	FAUCET	DELTA: 523LF-HDF	5" SPOUT, SGL. LEVER HANDLE, 4" CENTERS, POP-UP DRAIN ASSEMBLY, 0.5 GPM AERATOR, CHROME
	DRAIN		INSULATE DRAIN AND STOPS PER ADA REQUIREMENTS
	LAVATORY MIXING VALVE	SYMMONS: 7-210-CK	THERMOSTATIC MIXING VALVE, INTEGRAL CHECKS, 3/8" INLETS AND OUTLET, MOUNT BELOW LAVATORIES. MUST COMPLY WITH ASSE 1070.
SH-1	SHOWER	N/A	SHOWER TO BE BUILT ON SITE. CERAMIC TILE.
	SHOWER VALVE	SYMMONS: 4700-X	PRESSURE BALANCING MIXING VALVE WITH INTEGRAL SERVICE STOPS, ADA.
	SHOWER HEAD	SPEAKMAN: S-2252-EE2	POLISHED CHROME FINISH, SOLID BRASS CONSTRUCTION, 2.0 GPM, WATERSENSE LABELED.
	LINEAR DRAIN	SCHLUTER: KL1IFG 23 EB 120 KL1V 60 E 120	47-1/4" LENGTH, FRAMELESS TILEABLE GRATE, "PURE" STYLE. 47-1/4" KERDI-LINE CHANNEL. PROVIDE STAINLESS STEEL COVER PLATE AND STRAINER.
SH-2	SHOWER (A.D.A.)	N/A	SHOWER TO BE BUILT ON SITE. CERAMIC TILE.
	SHOWER VALVE	SYMMONS: 4700-X	PRESSURE BALANCING MIXING VALVE WITH INTEGRAL SERVICE STOPS, ADA.
	SHOWER HEAD	SYMMONS: T736-2.0	36" SLIDE BAR, ADA, CHROME HAND HELD SHOWER HEAD, 2.0 GPM. WATERSENSE LABELED.
	LINEAR DRAIN	SCHLUTER: KL1IFG 23 EB 70 KL1IFG 23 EB 80 KL1V 60 E 150	27-9/16" LENGTH, FRAMELESS TILEABLE GRATE, "PURE" STYLE. 31-1/2" LENGTH, FRAMELESS TILEABLE GRATE, "PURE" STYLE. 59-1/16" KERDI-LINE CHANNEL. PROVIDE STRAINER AND STAINLESS STEEL COVER PLATE BETWEEN GRATES.

MARK	ITEM	MFR: MODEL	DESCRIPTION
SH-3	SHOWER (A.D.A.)	N/A	SHOWER TO BE BUILT ON SITE. CERAMIC TILE.
	SHOWER VALVE	SYMMONS: 4700-X	PRESSURE BALANCING MIXING VALVE WITH INTEGRAL SERVICE STOPS, ADA.
	SHOWER HEAD	SYMMONS: T736-2.0	36" SLIDE BAR, ADA, CHROME HAND HELD SHOWER HEAD, 2.0 GPM. WATERSENSE LABELED.
GOB	GAS OUTLET BOX	BURNABY: BBQ-SS-50	BRUSHED STAINLESS STEEL BOX WITH LOW PRESSURE GAS CONNECTION. 1/2" NPT PIPE CONNECTION AND 1/2" QUICK DISCONNECT PLUG INCLUDED.
S-1	KITCHEN SINK	ELKAY: EFRU281610	30-1/2"X18-1/2"X10" DEEP, SINGLE COMPARTMENT, UNDERMOUNT, #16 STAINLESS STEEL, SELF-RIMMING SOUND DEADENED.
	FAUCET	CHICAGO: 1100-E35-369ABCP	8" SWINGING SPOUT, 1.5 GPM, LEVER HANDLES, 8" CTRS. MOUNT FAUCET CENTERED ON RIGHT HALF OF SINK BOWL.
	FAUCET	DANZE: D455258	22-7/8" PRE RINSE FAUCET, SINGLE LEVER, CHROME, 1.75 GPM. MOUNT FAUCET CENTERED ON LEFT HALF OF SINK BOWL.
	DRAIN		CRUMB CUP STRAINER, 1 1/2" TAILPIECE, STAINLESS STEEL.
	ACCESSORIES	INSINKERATOR: FGN1100	PROVIDE WITH INSINKERATOR FGN1100 HOT WATER DISPENSER AND SST-FLTR 2/3 GALLON HOT WATER TANK (750 WATTS, 115 / 1PH WITH GROUNDED THREE-PRONG PLUG).
S-2	SINK	ELKAY: ELUHAD131655PD	16"X18-1/2"X5-3/8" DEEP, SINGLE COMPARTMENT, UNDERMOUNT, #16 GAUGE STAINLESS STEEL, SELF-RIMMING SOUND DEADENED, ADA.
	FAUCET	CHICAGO: 1100-G2E35-317AB	5-1/4" SWINGING GOOSENECK, 1.5 GPM, LEVER HANDLES, ADA.
	DRAIN		CRUMB CUP STRAINER, 1 1/2" TAILPIECE, STAINLESS STEEL.
S-3	SINK	ELKAY: WELDBILT	CUSTOM 14 GAUGE 304 STAINLESS STEEL SINK. ONE COMPARTMENT, FULL LENGTH 8" HIGH BACKSPLASH. DRAINBOARD SLOPES TO SINK. STAINLESS STEEL TUBULAR LEGS. SEE ARCHITECTURAL DETAIL FOR DIMENSIONS AND DETAILS AND PROVIDE NECESSARY FAUCET HOLES.
	FAUCET	T & S BRASS: B-2187	WALL MOUNTED FITTING, 10" SWING SPOUT W/AERATOR, INDEXED LEVER HANDLES, 8" CTRS., PRE-RINSE FAUCET W/ RUBBER HOSE & SPRAY VALVE. CHROME FINISH. MOUNT ABOVE CENTER BOWL. 1.42 GPM
	DRAINS	ELKAY: LK25RT	2" DIAMETER TAILPIECE, ROTARY LEVER OPERATED DRAIN OUTLET
EW	EMERGENCY EYEWASH	HAWS: 7360BT-7460BT	WALL MOUNTED EYEWASH STATION, STAINLESS STEEL BOWL.
	EMERGENCY MIXING VALVE	HAWS: 9201E	THERMOSTATIC MIXING VALVE FOR TEMPERED WATER SUPPLY TO EMERGENCY EYEWASH AND EMERGENCY SHOWER. SEE FLOOR PLANS FOR MIXING VALVE LOCATION.
SS-1	SERVICE SINK	FIAT TSB3013	36" X 24", INCLUDES STAINLESS STEEL DRAIN ASSEMBLY AND STRAINER PLATE GRAY PORTLAND CEMENT
	FAUCET	T&S BRASS B-0665-CR-BSTR	WALL MOUNT WITH BRACE, VACUUM BREAKER, BUCKET HOOK, 3/4" HOSE THREAD, INTEGRAL CHECKS VALVES.
FD-1	FLOOR DRAIN	ZURN: Z415BZ	2" C.I. BODY, 5" DIAMETER NICKEL BRONZE STRAINER, TRAP PRIMER TAPPING. PROVIDE TRAP PRIMERS FOR ALL INSTALLATIONS EXCEPT SHOWERS. **REFER TO FLOOR DRAIN DETAIL FOR DRAIN CONST. &/OR COVERING.**
FD-2	FLOOR DRAIN	JOSAM: 32200-SD-81	4" OUTLET, C.I. BODY, 12" DIA. COATED CAST IRON STRAINER, SPECIAL DUTY GRATE, SLOTTED CAST IRON BUCKET **REFER TO FLOOR DRAIN DETAIL FOR DRAIN CONST. &/OR COVERING.**
FD-3	FLOOR DRAIN W/FUNNEL	ZURN: Z415BZ	2" C.I. BODY, 7" DIAMETER NICKEL BRONZE STRAINER, TRAP PRIMER TAPPING. PROVIDE TRAP PRIMERS FOR ALL INSTALLATIONS EXCEPT SHOWERS. PROVIDE WITH ZURN Z328 FUNNEL. **REFER TO FLOOR DRAIN DETAIL FOR DRAIN DETAIL FOR DRAIN CONST./COVERING.**
SV	SERVICE VALVE	SIOUX CHIEF: 696-G1010MF	1/2" SERVICE STOP FOR SUPPLY WATER, WATER HAMMER ARRESTOR, OUTLET BOX, 5-3/4" X 7-1/4" BOX.

MARK	ITEM	MFR: MODEL	DESCRIPTION
WH-1	WATER HEATER	LAARS: LUHE100T 199E3NA	100 GAL. CAP., 230 GPH RECOVERY @ 100 DEG. F TEMP. RISE. 199 MBH NATURAL GAS INPUT, PVC COMBUSTION AIR & GAS VENT, 96% EFF., 1700 LBS (WET), 115 VOLT, 15 AMPS.
ET	DOMESTIC EXPANSION TANK	AMTROL: ST-12	STEEL CONST. W/INTERNAL DIAPHRAGM 11" DIA. X 15" HIGH.
MV	MASTER MIXING VALVE	SYMMONS: 7-400	THERMOSTATIC MIXING VALVE, INTEGRAL CHECK STOPS, REMOVABLE STRAINER, BRONZE FINISH, WALL MOUNTED.
CP	CIRC. PUMP	ARMSTRONG: ASTRO 225SSU	6 GPM @ 8' HEAD, 115 VOLT/1 PHASE, FLA 0.69, 83 WATTS, STAINLESS STEEL PUMP BODY.
RD	ROOF DRAIN	ZURN: Z-100-C-R	15" DIAMETER CAST IRON BODY, 3" PIPE SIZE, ALUMINUM DOME, UNDER-DECK CLAMP.
OD	ROOF DRAIN	ZURN: Z-100-C-R-W2	15" DIAMETER CAST IRON BODY, 3" PIPE SIZE, ALUMINUM DOME, UNDER-DECK CLAMP. 2" HIGH DAM.
OSS-1	OIL/SAND SEPARATOR	UTILITY VAULT: 660-SA	450 GAL. PRECAST CONCRETE COMPLETE W/ BAFFLES, TOP W/ACCESS & INSPECTION COVERS & SAMPLING TEE. H-25 TRAFFIC-RATED COVER. ENSURE THAT LID IS GASKETED AND THAT SEPARATOR IS VENTED SEPARATELY. PROVIDE RISERS AS NEEDED TO MEET GRADE.
HB-1	EXTERIOR HOSE BIBB	WOODFORD: 19	FREEZE PROOF TYPE, AUTOMATIC DRAINING, LOOSE KEY
HB-2	HOSE STATION (HOT & COLD)	LEONARD: SW-75-EVBD	INT. VACUUM BREAKER, DIAL THERMOMETER, 3/4" HOSE THREAD. PROVIDE LEONARD 18100 MOUNTING PLATE.
	HOSE	LEONARD: 10-HDH	10' HEAVY DUTY HOSE
	NOZZLE	LEONARD: N-2	STANDARD NOZZLE
HB-3	HOSE BIBB (WHEEL HANDLE)	WOODFORD: 24	BRASS CONST., 3/4" HOSED END, VAC. BKR., WHEEL HANDLE, CHROME PLATED.
HB-4	ROOF HYDRANT	WOODFORD: RHY1-MS	3/4" BRASS NOZZLE, CAST IRON HYDRANT SUPPORT, BOOT COVER, 2 DEG. SHIM, UNDER DECK FLANGE.
HR	WATER HOSE REEL	REELCRAFT: CA33112 L	HAND CRANK HOSE REEL ON MOUNTING CHANNEL. PROVIDE WITH 75 FEET OF 3/4" HOSE & WALL MOUNTING RAIL.
DF	DRINKING FOUNTAIN	ELKAY: EZWS-EDFP217K	WALL MOUNT, STAINLESS STEEL, ADA, BOTTLE FILLER, FRONT PUSH BUTTONS, HI-LOW BASINS, SEE ARCH. FOR MOUNTING HEIGHTS. ELECTRICAL OUTLET CONCEALED IN WALL BY DIV. 26. PROVIDE WITH ELKAY FRONT ACCESS PANEL MODEL #12X38 FOR ACCESS TO ELECTRICAL OUTLET.
	FILTER	ELKAY: EWF3000	LEAD REDUCTION FILTER DESIGN FOR USE WITH ABOVE DRINKING. FOUNTAIN. QUICK DISCONNECT, 1/4 TURN INSTALLATION. INCLUDES REPLACEMENT FILTER.
TD-1	TRENCH DRAIN	ACO: S100K	6" WIDE X 4" DEEP MIN., SECTIONAL DRAINS (FIELD FABRICATE TO LENGTH SHOWN ON PLANS) PRECAST PRESLOPED POLYMER CONCRETE SYSTEM WITH SLOTTED DUCTILE IRON GRATE, CLASS F RATED.
	CATCH BASIN	ACO: SK901D	6" WIDE X 25" DP X 20" LONG, PRECAST POLYMER CONCRETE BASIN WITH SLOTTED DUCTILE IRON GRATE, CLASS F RATED. PROVIDE WITH REMOVABLE TRASH BUCKET.
TD-2	TRENCH DRAIN	ACO: S100K	6" WIDE X 4" DEEP MIN., SECTIONAL DRAINS (FIELD FABRICATE TO LENGTH SHOWN ON PLANS.) PRECAST PRESLOPED POLYMER CONCRETE SYSTEM WITH SLOTTED DUCTILE IRON GRATE.
	CATCH BASIN	ACO: SK901D	6" WIDE X 25" DP X 20" LONG, PRECAST POLYMER CONCRETE BASIN WITH SLOTTED DUCTILE IRON GRATE. PROVIDE WITH REMOVABLE TRASH BUCKET.
M	SUBMETER	NORGAS: MULTIMAG	BRASS, 150 PSI MAX PRESSURE, CW TYPE, 1-1/2" SIZE.
PF	POT FILLER	CHICAGO: 332-DJ24ABCP	24" DOUBLE-JOINTED SWING SPOUT, VANDAL PROOF 2-3/8" LEVER HANDLE, 1/2" CW CONNECTION.
LB	LAUNDRY BOX	OATEY: 38470SP	FIRE-RATED ABS OUTLET BOX 1/2" HW & 1/2" CW, 2" DRAIN.

TCA
ARCHITECTURE + PLANNING + DESIGN
6211 ROOSEVELT WAY NORTHEAST
SEATTLE, WA 98115
tel: (206) 522-3830
fax: (206) 522-2456

BID SET

No.	Description	Date:

Project Title:

FIRE STATION 24
City of Kirkland
Kirkland, Washington

Sheet Title:

SCHEDULES

Scale: 1/8"=1'-0"
Project No. : 18040
Date : JULY 21, 2020

Sheet Number :

P1.1

Provided to Builders Exchange of WA, Inc. For usage Conditions Agreement see www.bxwa.com - Always Verify Scal

SIDER+BYERS
MECHANICAL + ELECTRICAL ENGINEERS
192 Nickerson, Suite #300
Seattle, Washington 98109
Phone: 206.285.2966

PLUMBING FIXTURE CONNECTION SCHEDULE

MARK	FIXTURE	PIPE SIZE C.W	H.W	WASTE	VENT	WATER FIXTURE UNITS	WASTE FIXTURE UNITS	REMARKS
WC-1	WATER CLOSET	1"	-	3"	2"	5	4	WALL MOUNT, FLUSH VALVE
WC-2	WATER CLOSET	1"	-	3"	2"	5	4	WALL MOUNT, FLUSH VALVE, ADA
UR-1	URINAL	3/4"	-	2"	2"	4	2	
LAV-1	LAVATORY	1/2"	1/2"	1-1/4"	1-1/4"	1	1	TOP MOUNT
LAV-2	LAVATORY	1/2"	1/2"	1-1/4"	1-1/4"	1	1	WALL MOUNT
S-1	SINK	1/2"	1/2"	2"	1-1/2"	2	2	KITCHEN SINK
S-2	SINK	1/2"	1/2"	2"	1-1/2"	2	2	KITCHEN SINK
S-3	SINK	1/2"	1/2"	2"	1-1/2"	2	2	DECON SINK
PF	POT FILLER	1/2"	-	-	-	2	2	ABOVE RANGE
SS-1	MOP SINK	3/4"	3/4"	3"	2"	3	3	
SH-1	SHOWER	1/2"	1/2"	2"	1-1/2"	2	-	
SH-2	SHOWER	1/2"	1/2"	2"	1-1/2"	2	-	ADA
SH-3	SHOWER	1/2"	1/2"	2"	1-1/2"	2	2	
LB	LAUNDRY BOX	1/2"	1/2"	2"	1-1/2"	4	2	
FD-1	FLOOR DRAIN	-	-	2"	1-1/2"	-	2	
FD-2	FLOOR DRAIN	-	-	2"	1-1/2"	-	2	
FD-3	FLOOR DRAIN	-	-	2"	1-1/2"	-	2	
TD-1	TRENCH DRAIN	-	-	4"	-	-	8	TRAPPED/VENTED AT SEPARATOR
TD-2	TRENCH DRAIN	-	-	4"	2"	-	2	
LD	LINEAR DRAIN	-	-	2"	2"	-	2	
DF-1	DRINKING F.	1/2"	-	1-1/2"	1-1/2"	1	1	DOUBLE BASIN
HB-1	HOSE BIBB	3/4"	-	-	-	2.5	-	
HB-2	HOSE BIBB	3/4"	3/4"	-	-	2.5	-	HOT AND COLD
HB-3	HOSE BIBB	3/4"	-	-	-	2.5	-	
HB-4	HOSE BIBB	3/4"	-	-	-	2.5	-	
SV	SERVICE VALVE	1/2"	-	-	-	0.5	-	

BACKWATER VALVE SCHEDULE

MARK	MAKE	MODEL	SIZE	NOTES:
BWV-1	RECTORSEAL	CLEAN CHECK	4"	NORMALLY CLOSED TYPE
BWV-2	RECTORSEAL	CLEAN CHECK	4"	NORMALLY CLOSED TYPE

TCA
ARCHITECTURE + PLANNING + DESIGN
6211 ROOSEVELT WAY
NORTHEAST
SEATTLE, WA 98115
tel: (206) 522-3830
fax: (206) 522-2456

BID SET

No.	Description	Date:

Project Title:

FIRE STATION 24

City of Kirkland
Kirkland, Washington

Sheet Title:

SCHEDULES

Scale: 1/8"=1'-0"
Project No. : 18040
Date : JULY 21, 2020
Sheet Number :

P1.2

Provided to Builders Exchange of WA, Inc. For usage Conditions Agreement see www.bxwa.com - Always Verify Scal

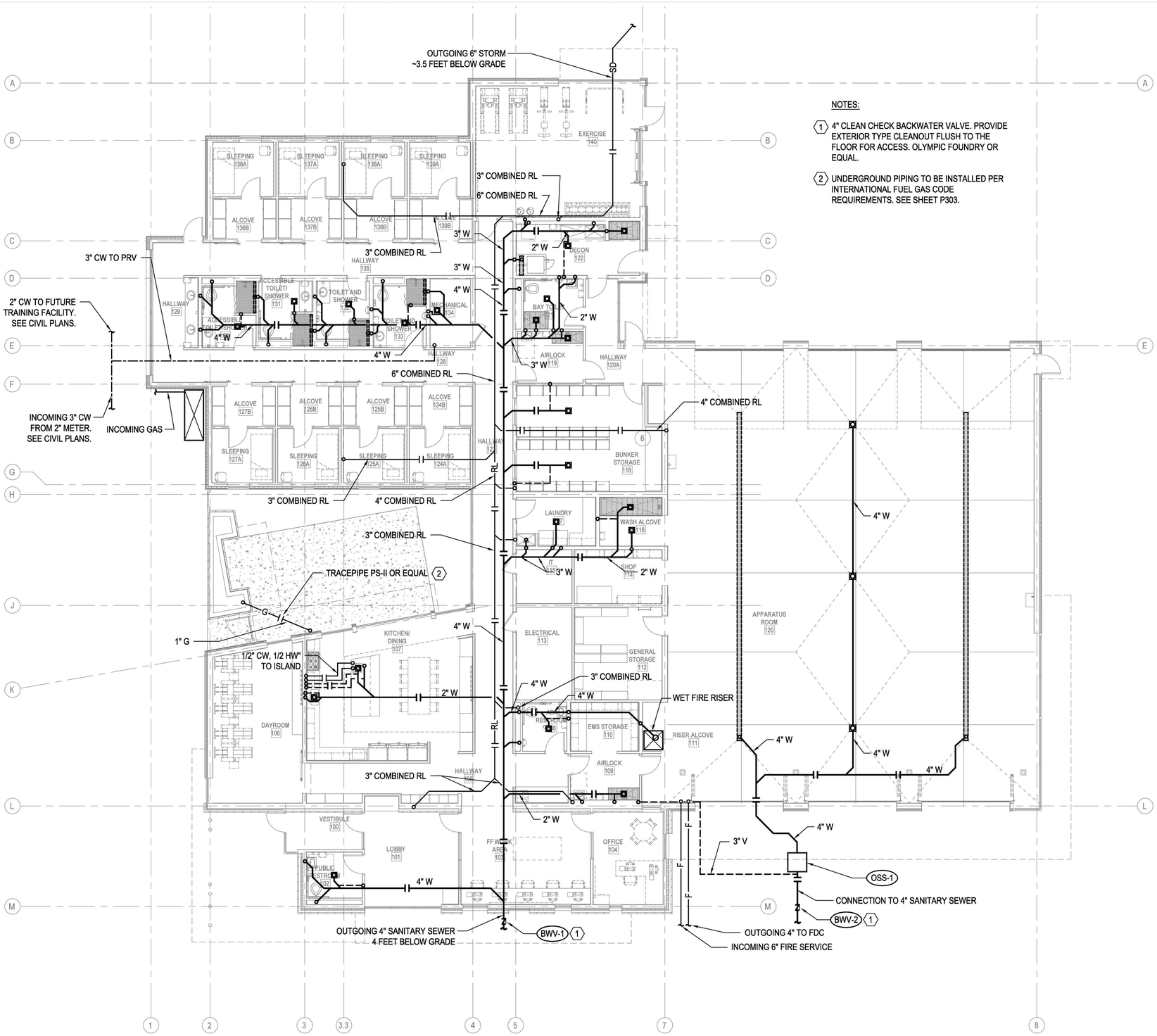

NOTES:

1. 4" CLEAN CHECK BACKWATER VALVE. PROVIDE EXTERIOR TYPE CLEANOUT FLUSH TO THE FLOOR FOR ACCESS. OLYMPIC FOUNDRY OR EQUAL.
2. UNDERGROUND PIPING TO BE INSTALLED PER INTERNATIONAL FUEL GAS CODE REQUIREMENTS. SEE SHEET P303.

FOUNDATION PLAN
SCALE: 1/8"=1'-0"

SIDER + BYERS
MECHANICAL + ELECTRICAL ENGINEERS
192 Nickerson, Suite #300
Seattle, Washington 98109
Phone: 206.285.2966

TCA
ARCHITECTURE + PLANNING + DESIGN
6211 ROOSEVELT WAY NORTHEAST
SEATTLE, WA 98115
tel: (206) 522-3830
fax: (206) 522-2456

BID SET

No.	Description	Date:

Project Title:

FIRE STATION 24

City of Kirkland
Kirkland, Washington

Sheet Title:

FOUNDATION PLAN

Scale: 1/8"=1'-0"
Project No. : 18040
Date : JULY 21, 2020
Sheet Number :

P2.0

Provided to Builders Exchange of WA, Inc. For usage Conditions Agreement see www.bxwa.com - Always Verify Scal

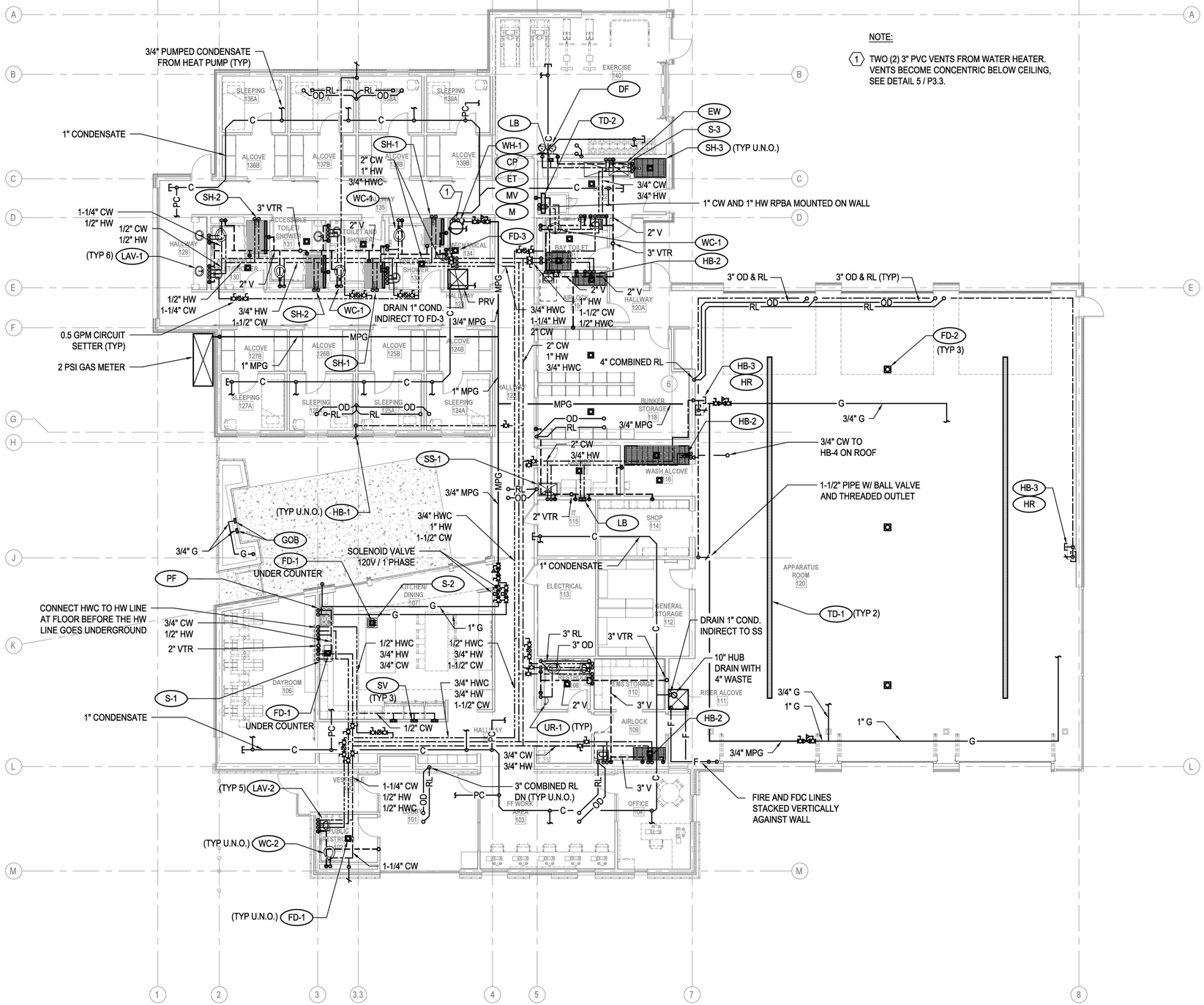

FLOOR PLAN
SCALE: 1/8"=1'-0"

SIDER + BYERS
MECHANICAL + ELECTRICAL ENGINEERS
192 Nickerson, Suite #300
Seattle, Washington 98109
Phone: 206.285.2966

TCA
ARCHITECTURE + PLANNING + DESIGN
6211 ROOSEVELT WAY NORTHEAST
SEATTLE, WA 98115
tel: (206) 522-3830
fax: (206) 522-2456

BID SET

No.	Description	Date:

Project Title:

FIRE STATION 24
City of Kirkland
Kirkland, Washington

Sheet Title:

FLOOR PLAN

Scale: 1/8"=1'-0"
Project No. : 18040
Date : JULY 21, 2020

Sheet Number :

P2.1

Provided to Builders Exchange of WA, Inc. For usage Conditions Agreement see www.bxwa.com - Always Verify Scal

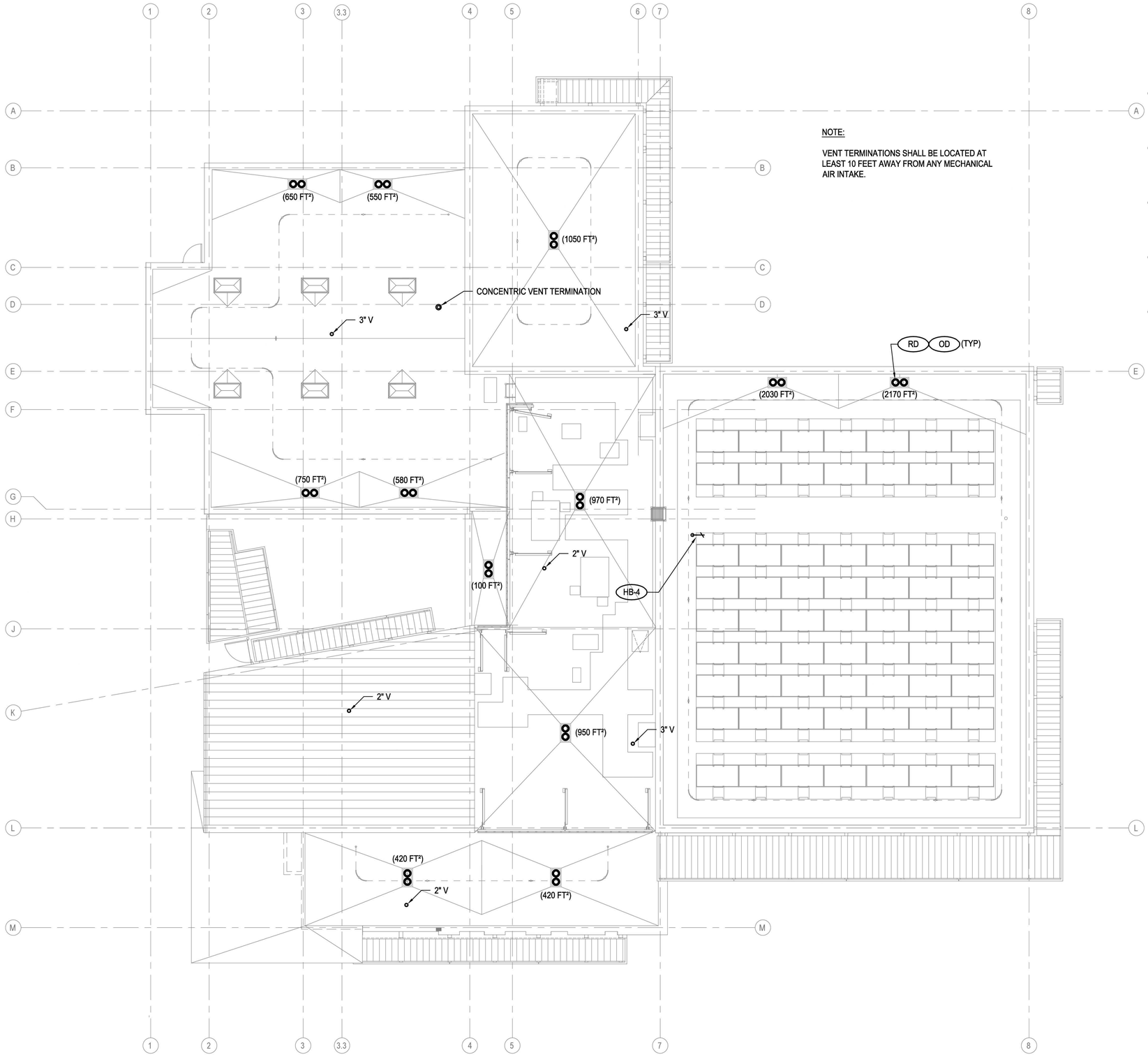

NOTE:

VENT TERMINATIONS SHALL BE LOCATED AT LEAST 10 FEET AWAY FROM ANY MECHANICAL AIR INTAKE.

ROOF PLAN
SCALE: 1/8"=1'-0"

SIDER + BYERS
MECHANICAL + ELECTRICAL ENGINEERS
192 Nickerson, Suite #300
Seattle, Washington 98109
Phone: 206.285.2966

TCA
ARCHITECTURE + PLANNING + DESIGN
6211 ROOSEVELT WAY NORTHEAST
SEATTLE, WA 98115
tel: (206) 522-3830
fax: (206) 522-2456

BID SET

No.	Description	Date:

Project Title:

FIRE STATION 24
City of Kirkland
Kirkland, Washington

Sheet Title:

ROOF PLAN

Scale: 1/8"=1'-0"
Project No. : 18040
Date : JULY 21, 2020

Sheet Number :

P2.2

Provided to Builders Exchange of WA, Inc. For usage Conditions Agreement see www.bxwa.com - Always Verify Scal

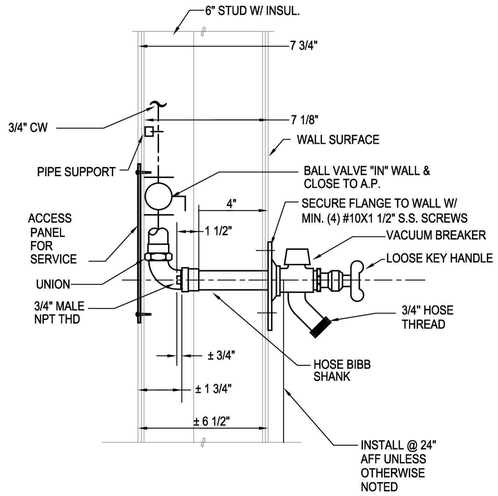

1 P3.0 **HOSE BIBB DETAIL**
N.T.S.

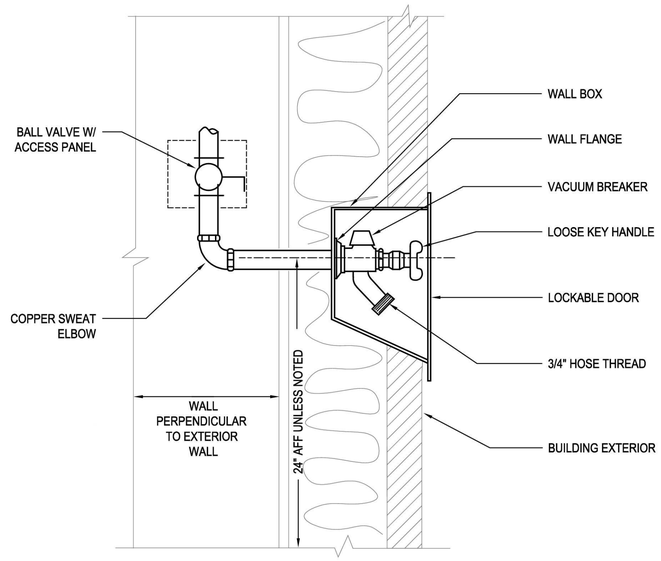

2 P3.0 **FREEZE PROOF HOSE BIBB DETAIL**
N.T.S.

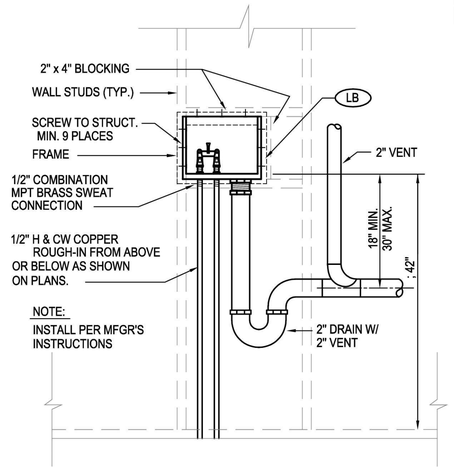

3 P3.0 **LAUNDRY BOX DETAIL**
N.T.S.

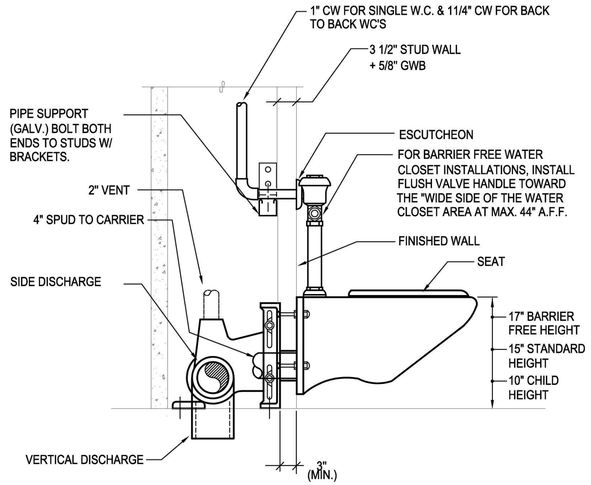

NOTES
1. SECURE PIPING @ OTHER WATER CLOSETS & URINALS IN SIMILAR MANNER
2. PROVIDE SIMILAR INSTALLATION FOR BACK TO BACK FIXTURES USING BACK TO BACK STYLE CARRIER.
3. PROVIDE HORIZONTAL OR VERTICAL CARRIER AS NECESSARY TO FIT CHASE WIDTH. VERIFY WIDTH ON ARCH DRAWINGS.

4 P3.0 **WALL HUNG FLUSH VALVE WATER CLOSET INSTALLATION DETAIL**
N.T.S.

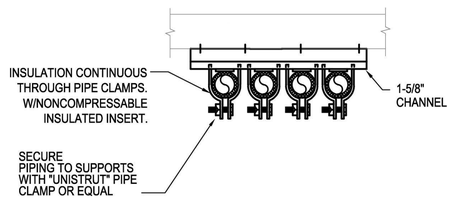

NOTE: QUANTITY OF PIPES SHOWN REPRESENTATIVE ONLY, PROVIDE QUANTITY OF PIPES REQUIRED.

5 P3.0 **PIPE SUPPORT**
N.T.S.

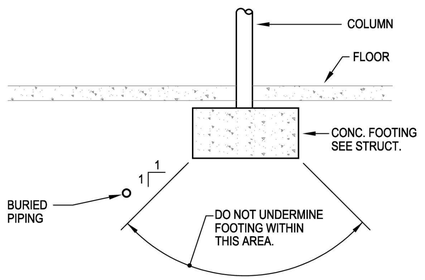

6 P3.0 **BURIED PIPING DETAIL**
N.T.S.

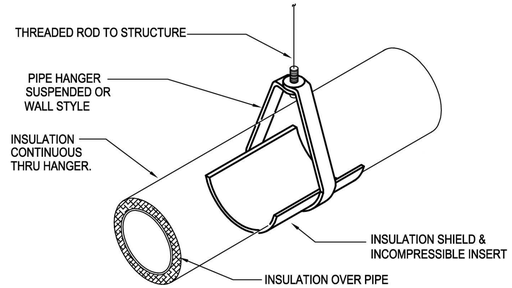

NOTE:
INSULATE & LABEL PIPING PER. SPEC.

7 P3.0 **PIPE HANGER DETAIL**
N.T.S.

SIDER+BYERS
MECHANICAL + ELECTRICAL ENGINEERS
192 Nickerson, Suite #300
Seattle, Washington 98109
Phone: 206.285.2966

TCA
ARCHITECTURE + PLANNING + DESIGN
6211 ROOSEVELT WAY NORTHEAST
SEATTLE, WA 98115
tel: (206) 522-3830
fax: (206) 522-2456

BID SET

No.	Description	Date:

Project Title:

FIRE STATION 24
City of Kirkland
Kirkland, Washington

Sheet Title:
DETAILS

Scale: 1/8"=1'-0"
Project No. : 18040
Date : JULY 21, 2020

Sheet Number :
P3.0

Provided to Builders Exchange of WA, Inc. For usage Conditions Agreement see www.bxwa.com - Always Verify Scal

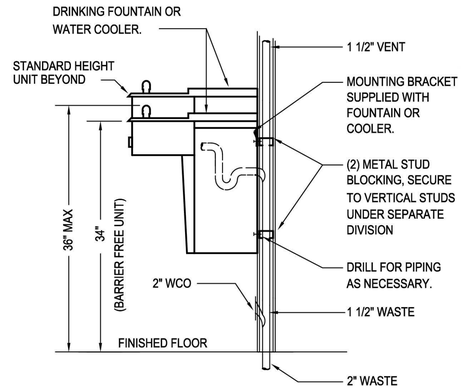

1 P3.1 **WATER COOLER DETAIL**

N.T.S.

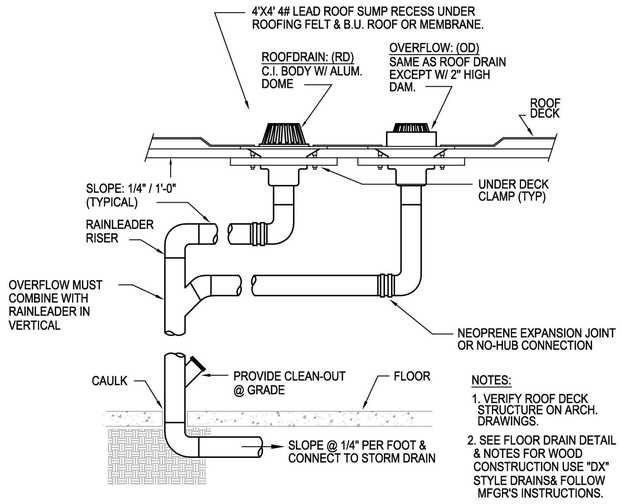

NOTES:

1. VERIFY ROOF DECK STRUCTURE ON ARCH. DRAWINGS.
2. SEE FLOOR DRAIN DETAIL & NOTES FOR WOOD CONSTRUCTION USE "DX" STYLE DRAINS& FOLLOW MFGR'S INSTRUCTIONS.

2 P3.1 **ROOF DRAIN PIPING SCHEMATIC**

N.T.S.

NOTES:

1. PROVIDE TRAP PRIMERS ON ALL FLOOR DRAINS & FLOOR SINKS EXCEPT SHOWER DRAINS OR WHERE OTHERWISE NOTED.
2. PRIMER VALVE EXPOSED IN MECH. ROOM OR JAN. CLOSET & CONCEALED BEHIND ACCESS PANEL IN OTHER AREAS.

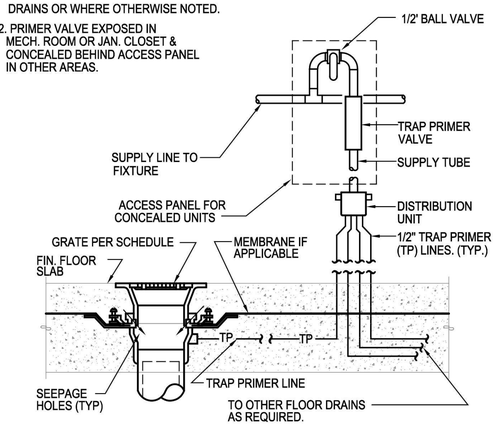

3 P3.1 **TRAP PRIMER DETAIL**

N.T.S.

NOTE:
FOR GRADE CLEANOUTS (GCO) IN VEHICULAR TRAFFIC AREAS, PROVIDE ACCESS HOUSING EQUAL TO WADE # 8300 MF-39.

4 P3.1 **FLOOR CLEANOUT DETAIL**

N.T.S.

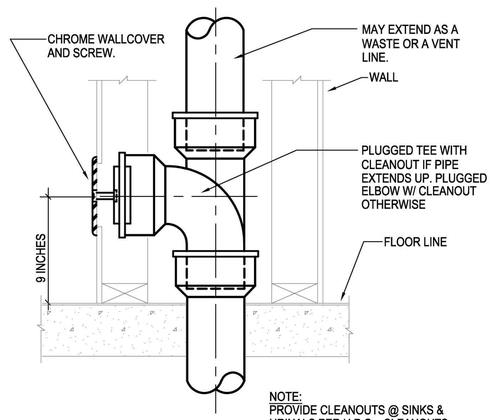

NOTE:
PROVIDE CLEANOUTS @ SINKS & URINALS PER U.P.C.. CLEANOUTS SHALL BE LOCATED BELOW FIXTURE.

5 P3.1 **WALL CLEANOUT DETAIL**

N.T.S.

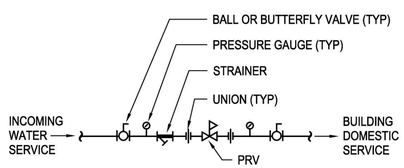

7 P3.1 **INCOMING WATER SERVICE DETAIL**

N.T.S.

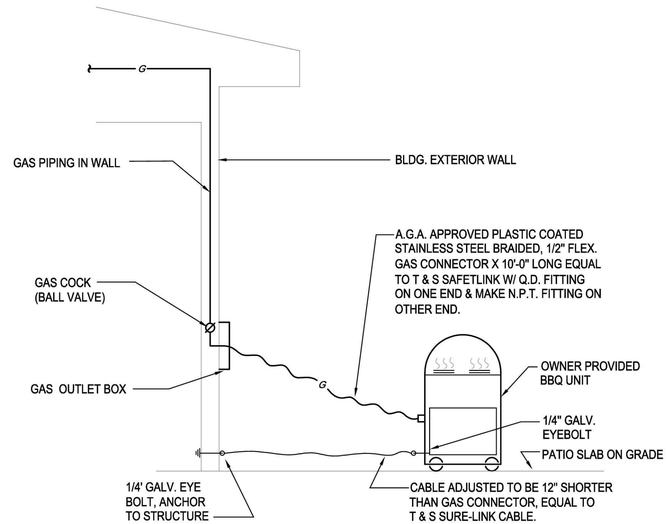

6 P3.1 **GAS BBQ DETAIL**

N.T.S.

SIDER + BYERS
MECHANICAL + ELECTRICAL ENGINEERS
192 Nickerson, Suite #300
Seattle, Washington 98109
Phone: 206.285.2966

TCA
ARCHITECTURE + PLANNING + DESIGN
6211 ROOSEVELT WAY
NORTHEAST
SEATTLE, WA 98115
tel: (206) 522-3830
fax: (206) 522-2456

BID SET

No.	Description	Date:

Project Title:

FIRE STATION 24

City of Kirkland
Kirkland, Washington

Sheet Title:

DETAILS

Scale: 1/8"=1'-0"
Project No. : 18040
Date : JULY 21, 2020

Sheet Number :

P3.1

Provided to Builders Exchange of WA, Inc. For usage Conditions Agreement see www.bxwa.com - Always Verify Scal

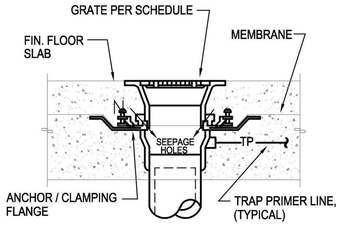

A CONCRETE INSTALLATION W/ MEMBRANE

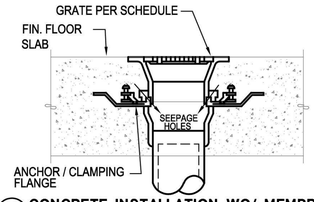

B CONCRETE INSTALLATION WO/ MEMBRANE

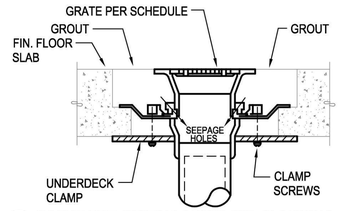

C CONCRETE INSTALLATION W/ CLAMPING RING

NOTES:
1. VERIFY FLOORING CONSTRUCTION BEFORE ORDERING DRAINS.
2. FLOOR DRAINS SHALL BE FLUSH TO 1/4' BELOW FIN. FLOOR. FLOOR SINKS SHALL BE 1/2" ABOVE TO 1/4" BELOW FIN. FLOOR VERIFY W/ LOCAL PLUMBING INSPECTOR.

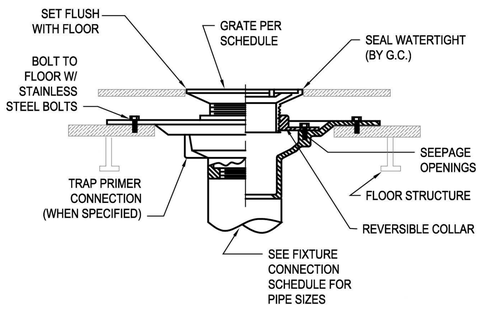

D FOR USE W/ DOUBLE WOOD FLOORS

NOTES FOR WOOD FLOOR INSTALLATION
1. VERIFY ASSEMBLY PROCEDURE W/ FLOORING MANUFACTURER.
2. ONLY INSTALL FLOOR DRAINS COMPATIBLE WITH WOOD CONSTRUCTION.
3. VERIFY FLOOR ASSEMBLY WITH ARCHITECT TO DETERMINE APPROPRIATE INSTALLATION METHOD.

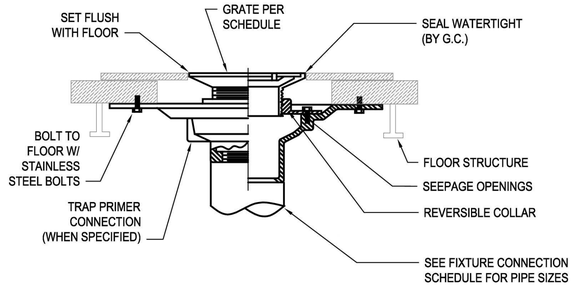

E FOR USE W/ SINGLE WOOD FLOORS

1 P3.2 FLOOR DRAIN / SINK INSTALLATION STYLES
N.T.S.

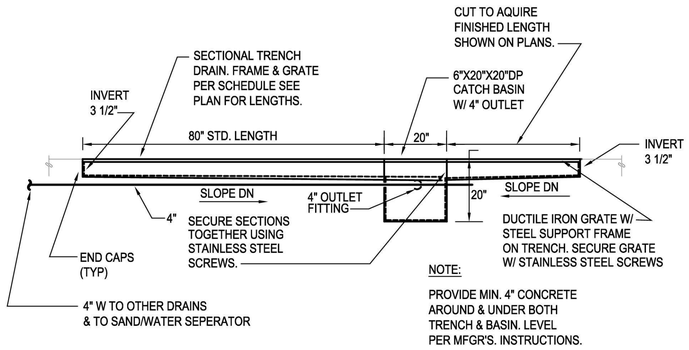

3 P3.2 TRENCH DRAIN DETAIL
N.T.S.

NOTES

1. HOSE STATION TO BE MOUNTED SUCH THAT THE BOTTOM OF THE HOSE RACK IS 2' ABOVE THE FINISHED FLOOR

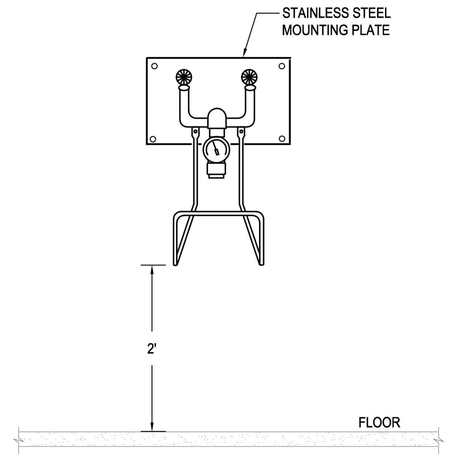

4 P3.2 HOSE STATION DETAIL
N.T.S.

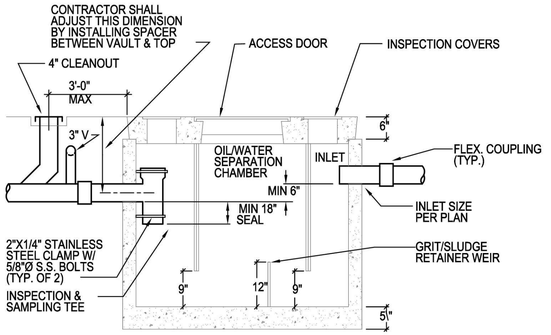

NOTES:
1. PROVIDE DIAMOND PLATE COVERS UNLESS LOCATED IN VEHICLE TRAFFIC AREA.
2. PROVIDE H-20 RATED TRAFFIC COVERS WHEN INSTALLED IN VEHICLE TRAFFIC AREA.

2 P3.2 OIL/WATER INTERCEPTOR DETAIL
N.T.S.

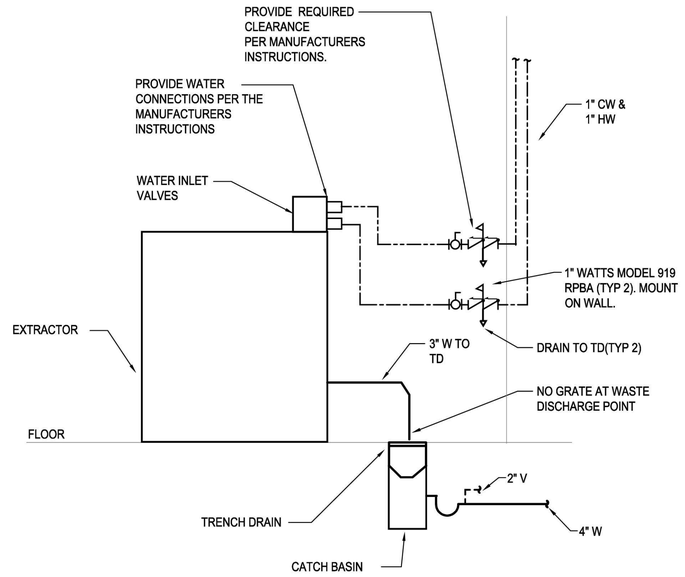

5 P3.2 EXTRACTOR DETAIL
N.T.S.

SIDER+BYERS
MECHANICAL + ELECTRICAL ENGINEERS
192 Nickerson, Suite #300
Seattle, Washington 98109
Phone: 206.285.2966

TCA
ARCHITECTURE + PLANNING + DESIGN
6211 ROOSEVELT WAY NORTHEAST
SEATTLE, WA 98115
tel: (206) 522-3830
fax: (206) 522-2456

BID SET

No.	Description	Date:

Project Title:

FIRE STATION 24
City of Kirkland
Kirkland, Washington

Sheet Title:
DETAILS

Scale: 1/8"=1'-0"
Project No. : 18040
Date : JULY 21, 2020

Sheet Number :
P3.2

Provided to Builders Exchange of WA, Inc. For usage Conditions Agreement see www.bxwa.com - Always Verify Scal

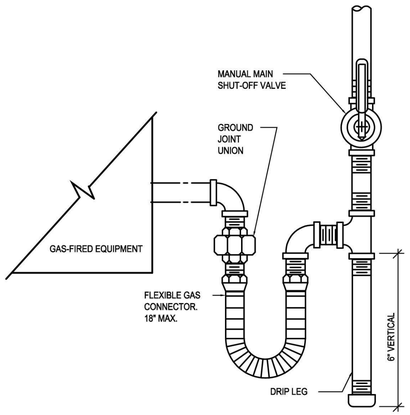

1 P3.3 GAS LINE CONNECTION DETAIL
N.T.S.

NOTE:
1. PROVIDE INSULATED P-TRAP AND SUPPLY COVERS AT ALL EXPOSED P-TRAPS AND SUPPLIES PER ADA STANDARDS.

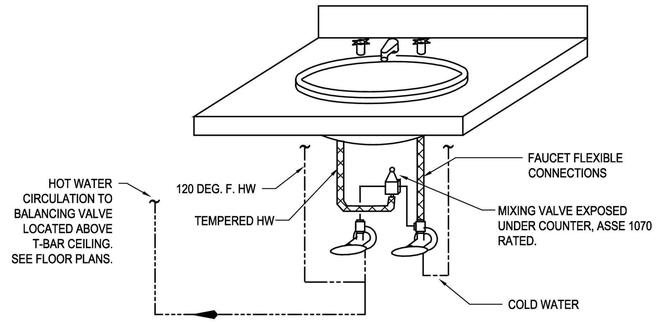

LAVATORY WATER CONNECTION DETAIL
3 P3.3 N.T.S.

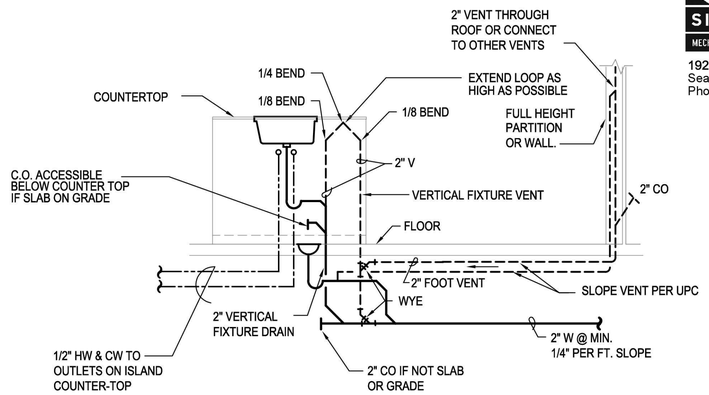

3 P3.3 ISLAND VENT DETAIL
N.T.S.

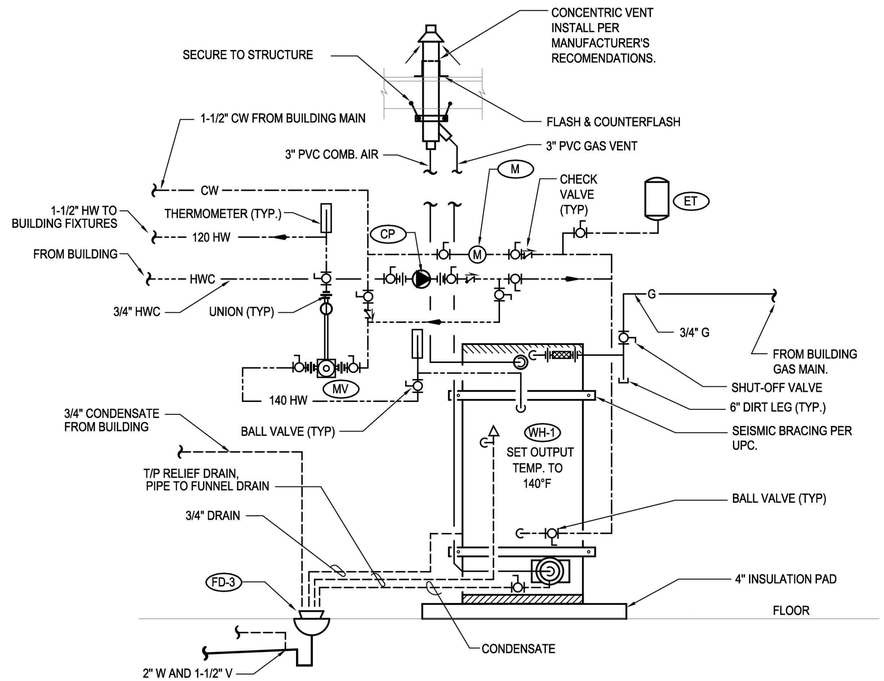

5 P3.3 LAARS WATER HEATER DETAIL
N.T.S.

NOTE:
IN LIEU OF FABRICATED SYSTEM, PRE-MANUFACTURED VENTED UNDERGROUND GAS PIPING CONDUIT SYSTEMS THAT MEET THE FUEL GAS CODE REQUIREMENTS ARE ACCEPTABLE. TRACEPIPE PS-II OR EQUAL.

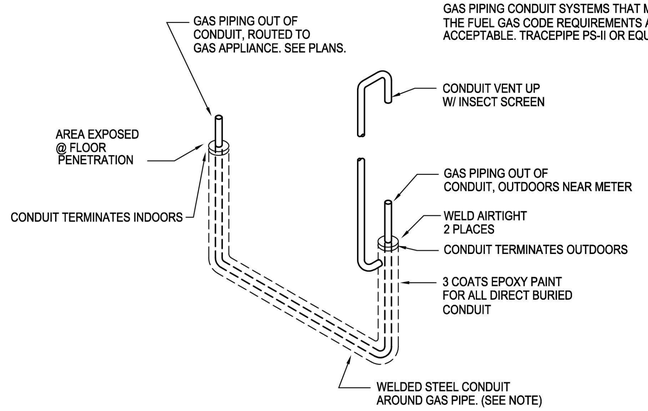

4 P3.3 GAS LINE CONDUIT DETAIL
N.T.S.

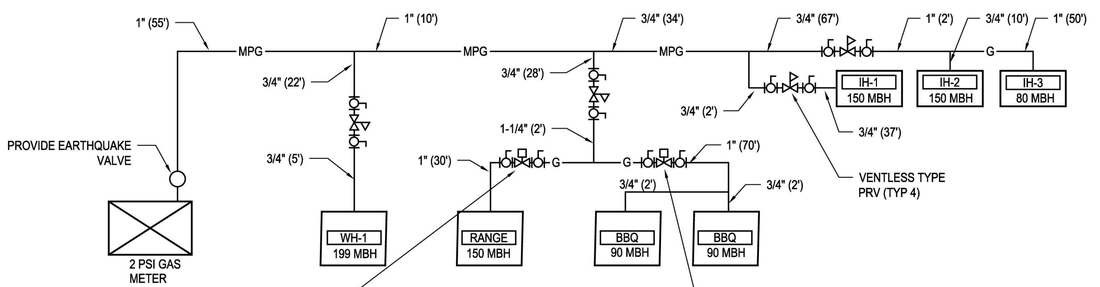

6 P3.3 GAS RISER DIAGRAM
N.T.S.

SIDER+BYERS
MECHANICAL + ELECTRICAL ENGINEERS
192 Nickerson, Suite #300
Seattle, Washington 98109
Phone: 206.285.2966

TCA
ARCHITECTURE + PLANNING + DESIGN
6211 ROOSEVELT WAY NORTHEAST
SEATTLE, WA 98115
tel: (206) 522-3830
fax: (206) 522-2456

BID SET

No.	Description	Date:

Project Title:

FIRE STATION 24
City of Kirkland
Kirkland, Washington

Sheet Title:
DETAILS

Scale: 1/8"=1'-0"
Project No. : 18040
Date : JULY 21, 2020

Sheet Number :
P3.3

Provided to Builders Exchange of WA, Inc. For usage Conditions Agreement see www.bxwa.com - Always Verify Scal

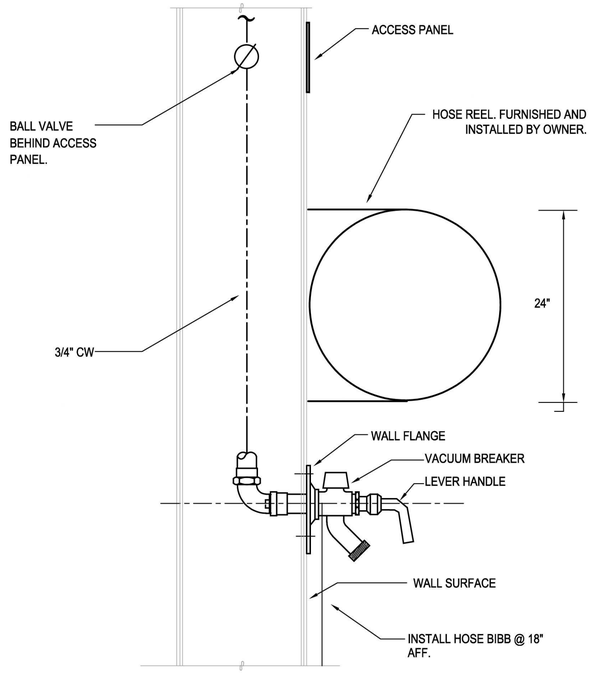

APP. BAY HOSE BIBB DETAIL

1 / P3.4 N.T.S.

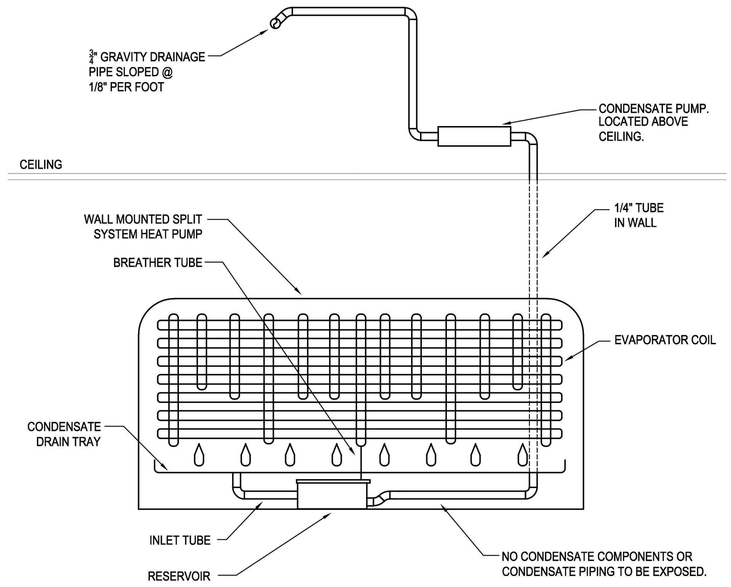

WALL MOUNTED SPLIT SYSTEM CONDENSATE DETAIL

2 / P3.4 N.T.S.

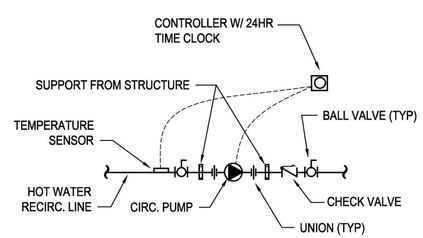

DOMESTIC CIRC. PUMP DETAIL

3 / P3.4 N.T.S.

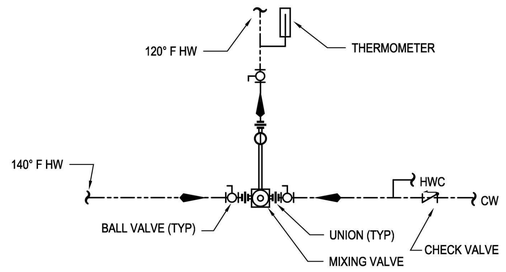

MASTER MIXING VALVE DETAIL

4 / P3.4 N.T.S.

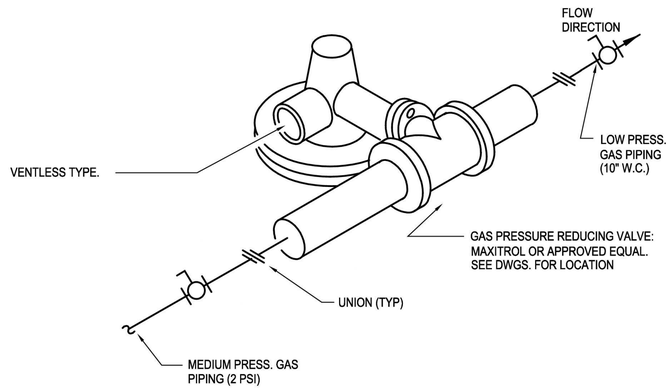

INLINE GAS P.R.V. DIAGRAM

5 / P3.4 N.T.S.

SIDER+BYERS
MECHANICAL + ELECTRICAL ENGINEERS
192 Nickerson, Suite #300
Seattle, Washington 98109
Phone: 206.285.2966

TCA
ARCHITECTURE + PLANNING + DESIGN
6211 ROOSEVELT WAY
NORTHEAST
SEATTLE, WA 98115
tel: (206) 522-3830
fax: (206) 522-2456

BID SET

No.	Description	Date:

Project Title:

FIRE STATION 24

City of Kirkland
Kirkland, Washington

Sheet Title:

DETAILS

Scale: 1/8"=1'-0"
Project No. : 18040
Date : JULY 21, 2020

Sheet Number :

P3.4

Provided to Builders Exchange of WA, Inc. For usage Conditions Agreement see www.bxwa.com - Always Verify Scal

ELECTRICAL LEGEND

GENERAL ITEMS

- FLAG NOTE
- KEY NOTE
- MECHANICAL EQUIPMENT TAG (FF-3)
- EQUIPMENT TAG (100)
- REVISION CLOUD
- REVISION DELTA
- DETAIL/ PLAN SHEET IDENTIFIER (1 / E1.01)
- NORTH ARROW
- SECTION IDENTIFIER (A / E1.01)
- ELEVATION IDENTIFIER (A / E1.1)
- SYMBOLS SHOWN ON PLANS IN STANDARD (HEAVY) LINE WEIGHT ARE NEW OR RELOCATED WORK.
- SYMBOLS SHOWN IN LIGHT LINE WEIGHT OR DESIGNATED WITH (E) INDICATE EXISTING TO REMAIN.
- SYMBOLS SHOWN AS DASHED INDICATE ITEMS TO BE REMOVED OR DEMOLISHED.
- EXISTING WORK TO BE DEMOLISHED/ REMOVED
- EXISTING WORK TO REMAIN
- NEW WORK
- MATCHLINE
- ENLARGED PLAN BOUNDRY

BOXES, CIRCUITING AND RACEWAYS

- CONDUIT CONCEALED IN CEILING OR WALL
- CONDUIT CONCEALED UNDER FLOOR OR UNDERGROUND
- CONDUIT HOME-RUN
- CONDUCTORS IN CONDUIT (PHASE CONDUCTOR(S), NEUTRAL CONDUCTOR, GROUND CONDUCTOR)
- FIRE STOP SLEEVE
- CONDUIT WITH BELL END
- CONDUIT WITH VERTICAL TRANSITION
- CONDUIT SLEEVE WITH BUSHING
- CONDUIT STUB WITH BUSHING
- CONDUIT BREAK
- CONDUIT CONTINUATION
- CABLE TRAY, OVERHEAD MESH TYPE
- CABLE TRAY, OVERHEAD LADDER TYPE
- PULL BOX (WHERE INDICATED ON DRAWINGS, SUBSCRIPT INDICATES TYPE)
- HANDHOLE (WHERE INDICATED ON DRAWINGS, SUBSCRIPT INDICATES TYPE)
- UTILITY VAULT (WHERE INDICATED ON DRAWINGS, SUBSCRIPT INDICATES TYPE)
- FLOORBOX (WHERE INDICATED ON DRAWINGS, SUBSCRIPT INDICATES TYPE)
- POKE-THRU (WHERE INDICATED ON DRAWINGS, SUBSCRIPT INDICATES TYPE)
- POWER POLE, FLOOR TO CEILING
- SURFACE METAL RACEWAY

GROUNDING

- GROUND ROD
- GROUNDING BUSBAR (TGB 10")
- GROUNDING BUSBAR (TMGB 20")
- EQUIPMENT GROUNDING CONNECTION
- GROUNDING STRAP

POWER & EQUIPMENT CONNECTIONS

- CIRCUIT BREAKER PANELBOARD
- LOAD CENTER
- LIGHTING CONTROL PANEL
- TERMINAL CABINET
- SWITCHBOARD OR MOTOR CONTROL CENTER (SIZE AS SHOWN ON PLANS)
- DRY TYPE TRANSFORMER (SEE NOTES & RISER DIAGRAM FOR SIZE)
- TRANSFER SWITCH
- UTILITY TRANSFORMER
- METER
- EQUIPMENT CONNECTION
- WALL MOUNTED EQUIPMENT CONNECTION
- MOTOR CONNECTION
- FAN CONNECTION
- ELECTRIC WALL HEATER CONTROLLED BY WALL MOUNTED THERMOSTAT
- ELECTRIC WALL HEATER WITH INTEGRAL THERMOSTAT
- ELECTRIC UNIT HEATER
- DISCONNECT SWITCH
- FUSED DISCONNECT SWITCH
- MAGNETIC MOTOR STARTER
- COMBINATION STARTER AND DISCONNECT
- ENCLOSED CIRCUIT BREAKER
- VARIABLE FREQUENCY DRIVE
- HAND/OFF/AUTO SWITCH
- START-STOP PUSHBUTTON SWITCH
- PUSHBUTTON SWITCH
- MOTOR RATED SWITCH
- WALL MOUNTED THERMOSTAT
- ELECTRIC BASEBOARD HEATER (LENGTH & WATTAGE ON PLAN)
- HEAT LAMP
- EXHAUST FAN/HEAT LAMP COMBINATION
- EXHAUST FAN/LIGHT COMBINATION
- CEILING / PADDLE FAN
- EMERGENCY POWER OFF PUSHBUTTON

RECEPTACLES & OUTLETS

- SINGLE RECEPTACLE
- DUPLEX RECEPTACLE (T = TAMPER RESISTANT)
- DOUBLE DUPLEX RECEPTACLE
- DUPLEX GFCI RECEPTACLE (WP = WEATHERPROOF WHILE-IN-USE COVER)
- DOUBLE DUPLEX GFCI RECEPTACLE
- DUPLEX RECEPTACLE MOUNTED IN CEILING
- DOUBLE DUPLEX RECEPTACLE MOUNTED IN CEILING
- DUPLEX RECEPTACLE (MOUNTED +4'O.C. ABOVE COUNTER OR BACKSPLASH) (U.O.N.)
- DOUBLE DUPLEX RECEPTACLE (MOUNTED +4'O.C. ABOVE COUNTER OR BACKSPLASH) (U.O.N.)
- DUPLEX GFCI RECEPTACLE (MOUNTED +4'O.C. ABOVE COUNTER OR BACKSPLASH) (U.O.N.)
- DOUBLE DUPLEX GFCI RECEPTACLE (MOUNTED +4'O.C. ABOVE COUNTER OR BACKSPLASH) (U.O.N.)
- DUPLEX RECEPTACLE MOUNTED HORIZONTALLY
- SWITCHED (SPLIT) DUPLEX RECEPTACLE
- DOUBLE DUPLEX RECEPTACLE WITH 1/2 SWITCHED
- SINGLE SPECIAL PURPOSE RECEPTACLE
- JUNCTION BOX WITH BLANK COVER
- JUNCTION BOX WITH BLANK COVER, WALL MOUNT (F = FURNITURE FEED)
- DOORBELL

ELECTRICAL ONE-LINE DIAGRAM

- EQUIPMENT ENCLOSURE
- BUS BAR
- WIRE
- LUG
- CONNECTION
- WYE
- DELTA
- GROUND
- CURRENT TRANSFORMER
- CIRCUIT BREAKER
- CIRCUIT BREAKER, DRAW OUT
- FUSED SWITCH
- FUSE
- METERING DEVICE (A = AMMETER, M = METER, V = VOLTMETER, W= WATT HOUR METER)
- GENERATOR
- MOTOR CONNECTION
- GROUND FAULT PROTECTION
- SHUNT TRIP
- AVAILABLE FAULT CURRENT TAG (10,000)
- FEEDER TAG (200)
- SURGE PROTECTIVE DEVICE
- TRANSFER SWITCH
- ENCLOSED CIRCUIT BREAKER
- ENCLOSED DISCONNECT SWITCH
- ENCLOSED DISCONNECT SWITCH, FUSED
- TRANSFORMER (480V / 208Y 120V)
- PANELBOARD, MAIN LUGS ONLY
- PANELBOARD, CIRCUIT BREAKER
- PANELBOARD, MAIN LUGS ONLY WITH CIRCUIT BREAKER OFF MAIN BUS
- METER CENTER (ENCLOSURE SIZED AS REQUIRED)

LIGHT FIXTURES AND CONTROLS

NOTE: LIGHTING FIXTURE SYMBOLS SHOW LENGTH, MOUNTING & EMERGENCY EGRESS INFORMATION ONLY. REFER TO FIXTURE DESIGNATIONS & LIGHTING FIXTURE SCHEDULE FOR LAMP TYPE & OTHER FIXTURE SPECIFICS.

- SURFACE MOUNTED DOWNLIGHT (ROUND / SQUARE)
- RECESSED DOWNLIGHT (ROUND / SQUARE)
- PENDANT MOUNTED FIXTURE OR CHANDELIER
- SINGLE POINT SOURCE WALL MOUNTED FIXTURE
- WALL SCONCE
- WALL MOUNTED LONG ARM FIXTURE
- SURFACE MOUNTED LINEAR FIXTURE
- RECESSED LINEAR FIXTURE
- PENDANT MOUNTED LINEAR FIXTURE
- SURFACE MOUNTED LINEAR FIXTURE (NARROW BODY)
- LINEAR STRIP FIXTURE
- LINEAR INDUSTRIAL STRIP FIXTURE
- WALL MOUNTED LINEAR FIXTURE
- WALL MOUNTED STRIP FIXTURE
- WALL MOUNTED INDUSTRIAL LINEAR FIXTURE
- RECESSED LINEAR WALLWASHER
- LINEAR UNDERCABINET FIXTURE
- LED COVE OR UNDERCABINET LIGHT (LENGTH AS SHOWN ON PLAN, TRANSFORMER(S) SHOWN AS REQUIRED)
- TRACK LIGHT (LENGTH AS SHOWN ON PLAN)
- RECESSED LINEAR FIXTURE, 2' x 4'
- RECESSED WALLWASHER
- FLOODLIGHT OR MONOPOINT
- SURFACE LINEAR EMERGENCY EGRESS FIXTURE
- RECESSED LINEAR EMERGENCY EGRESS FIXTURE
- 2'x4' FIXTURE SPLIT BETWEEN NORMAL & EMERGENCY EGRESS WITH UL924 RELAY (DUAL CIRCUITS SHOWN ON PLANS)
- RECESSED EMERGENCY EGRESS DOWNLIGHT (ROUND / SQUARE)
- SURFACE EMERGENCY EGRESS DOWNLIGHT (ROUND / SQUARE)
- FLOODLIGHT, MONOPOINT OR TRACK HEAD EGRESS
- EGRESS COVE LIGHT OR STRIP
- UNIVERSAL/CEILING MOUNTED EXIT SIGN
- WALL MOUNTED EXIT SIGN
- DIRECTIONAL EXIT SIGN (ARROWS INDICATE ONE OR TWO SIDES AND DIRECTION INDICATED)
- EMERGENCY EXIT SIGN WITH DUAL PATHWAY HEADS
- DUAL HEAD EMERGENCY EGRESS FIXTURE
- POLE MOUNTED LIGHT FIXTURE
- DUAL HEAD, POLE MOUNTED LIGHT FIXTURE
- POST TOP LIGHT FIXTURE
- RECESSED STEP LIGHT FIXTURE
- RECESSED DIRECT BURIAL FLOODLIGHT
- DOCK LIGHT FIXTURE, WALL MOUNTED
- OCCUPANCY SENSOR, CEILING MOUNTED
- OCCUPANCY SENSOR, WALL MOUNTED
- PHOTOCELL LIGHT SENSOR
- VACANCY SENSOR
- COMBINATION VACANCY/ PHOTOCELL SENSOR
- SENSOR POWER PACK

SWITCHES

- SWITCH, SPST AND/ OR AS INDICATED BY SUBSCRIPT
  - a = SWITCH LEG
  - 3 = THREE-WAY
  - 4 = FOUR-WAY
  - K = KEYED
  - D = DIMMER
  - OS = OCCUPANCY SENSOR
  - VS = VACANCY SENSOR
  - T = TIMER
  - R# = RELAY
  - P = PILOT LIGHT
  - LV = LOW VOLTAGE
  - LVP = LOW VOLTAGE PROGRAMMABLE
  - S# = SENSOR ZONE

(a,b,c) USED TO INDICATE MULTIPLE SWITCHES

SWITCH COMBINATION EXAMPLE (4K = FOUR-WAY KEYED SWITCH).

FIRE ALARM SYSTEM

- MANUAL PULL STATION
- HORN / STROBE, WALL MOUNTED
- HORN / STROBE, CEILING MOUNTED
- STROBE ONLY, WALL MOUNTED
- STROBE ONLY, CEILING MOUNTED
- SMOKE DETECTOR
- HEAT DETECTOR
- DUCT SMOKE DETECTOR
- MAGNETIC DOOR HOLDER
- TAMPER SWITCH
- FLOW SWITCH
- BEAM SMOKE DETECTOR TRANSMITTER
- BEAM SMOKE DETECTOR RECEIVER
- FIRE/SMOKE DAMPER (FSD)
- FIRE ALARM CONTROL PANEL

TELECOMMUNICATIONS SYSTEM

- TELECOMMUNICATIONS DEVICE OUTLET (# = QUANTITY OF TELECOMMUNICATIONS MODULES/ JACKS) (B = BLANK COVER PLATE) (W = WALL PHONE PLATE AT +44" AFF) (AC = ABOVE COUNTER DEVICE) (F = MODULAR FURNITURE DEVICE) (S = SURFACE MOUNT DEVICE) (WAP = WIRELESS ACCESS POINT DEVICE)
- TELECOMMUNICATIONS DEVICE OUTLET- ABOVE CEILING (# = QUANTITY OF TELECOMMUNICATIONS MODULES/ JACKS) (CAM = IP CAMERA DEVICE) (WAP = WIRELESS ACCESS POINT DEVICE)
- FIRE RESISTANT 3/4" PLYWOOD BACKBOARD
- 19" TWO-POST FLOOR MOUNTED EQUIPMENT RACK
- 6" DOUBLE-SIDED VERTICAL CABLE MANAGER
- 110-BLOCK WITH LEGS, WALL MOUNTED
- 66-BLOCK, WALL MOUNTED

TELEVISION DISTRIBUTION SYSTEM

- CATV OUTLET, WALL MOUNTED

DRAWING INDEX

E0.1	ELECTRICAL LEGEND AND DRAWING INDEX
E0.2	ELECTRICAL ABBREVIATIONS AND GENERAL NOTES
E0.3	MECHANICAL EQUIPMENT CONNECTION SCHEDULE AND SYSTEMS ROUGH-IN SCHEDULES
E0.4	LIGHTING FIXTURE SCHEDULE
E0.5	ENERGY FORMS
E1.1	ELECTRICAL SITE PLAN
E1.2	ELECTRICAL SITE LIGHTING PLAN
E2.1	1ST FLOOR POWER PLAN
E2.2	ROOF POWER PLAN
E3.1	1ST FLOOR LIGHTING PLAN
E4.1	1ST FLOOR MECHANICAL POWER PLAN
E4.2	ROOF MECHANICAL POWER PLAN
E5.1	1ST FLOOR TELECOM AND SECURITY PLAN
E6.1	1ST FLOOR ALERTING PLAN
E7.1	1ST FLOOR FIRE ALARM PLAN
E8.1	ENLARGED PLANS, ELECTRICAL DETAILS
E8.2	TELECOMMUNICATIONS ENLARGED PLANS AND DETAILS
E8.3	TELECOMMUNICATIONS DETAILS
E8.4	TELECOMMUNICATIONS DETAILS
E8.5	ELECTRICAL DETAILS
E9.1	ONE LINE DIAGRAM
E10.1	PANEL SCHEDULES
E10.2	PANEL SCHEDULES
EL1.2	SITE LIGHTING CALCULATION PLAN
EL3.1	EMERGENCY EGRESS LIGHTING PLAN

ACCESS CONTROL SYSTEM

- ACCESS CONTROL PANEL (ACP)
- SECURITY DEVICE, WALL MOUNTED (AQ = AUTO OPERATOR) (BR = BIOMETRIC READER) (CR = CARD READER) (CR/M = MULLION CARD READER) (CR/K = CARD READER WITH KEYPAD) (EDR = EMERGENCY DOOR RELEASE) (LD = LOCKDOWN BUTTON) (KS = KEYED SWITCH) (PB = PANIC BUTTON) (RX = REQUEST TO EXIT BUTTON)
- REQUEST TO EXIT DETECTOR, INTEGRAL MICRO SWITCH (RX)
- DOOR POSITION SWITCH/ SECURITY CONTACT (DP)
- POWER SUPPLY, DOOR HARDWARE (PS)
- EMERGENCY CALL BOX (ECB)
- DOOR HARDWARE (BY DIV.08, CONNECTION BY DIV.28) (EL = ELECTRIFIED LOCKSET/ EXIT DEVICE) (ES = ELECTRIFIED STRIKE) (ML = ELECTRIFIED MAGNETIC LOCK) (MH = ELECTRIFIED MAGNETIC HOLD OPEN)

SECURITY VIDEO SYSTEM

- CAMERA, WALL MOUNT
- CAMERA, CEILING MOUNT
- MULTI-LENS CAMERA, WALL OR POLE MOUNT
- MULTI-LENS CAMERA, CEILING MOUNT

NOT ALL SYMBOLS MAY APPEAR IN THE DRAWINGS

TCA
ARCHITECTURE □ PLANNING □ DESIGN
6211 ROOSEVELT WAY NORTHEAST
SEATTLE, WA 98115
tel: □206□522-3830
□ax: □206□522-2456

CASE ENGINEERING
ELECTRICAL | LIGHTING | TELECOM | SECURITY
19515 North Creek Parkway, Suite 302
Bothell, WA 98011
425-402-9400 office@caseeng.com
17330

MICHAEL S CASE — STATE OF WASHINGTON — 07/21/2020 — 33273 — REGISTERED PROFESSIONAL ENGINEER

BID SET

No.	Descri□tion	Date:

Project Title:

FIRE STATION 24
City of Kirkland
Kirkland, Washington

Sheet Title:

ELECTRICAL LEGEND AND DRAWING INDEX

Scale: NOTED
Project No. : 16-46
Date : July 21, 2020

Sheet Number :

E0.1

Provided to Builders Exchange of WA, Inc. For usage Conditions Agreement see www.bxwa.com - Always Verify Scal

ELECTRICAL LEGEND

ABBREVIATIONS

A (200A)	AMPERE; AMPS (AFTER VALUE)
AC	AIR CONDITIONING; ALTERNATING CURRENT; ABOVE COUNTER
AF	AMP FUSE
AFF	ABOVE FINISHED FLOOR
AG	ABOVE GRADE
AHJ	AUTHORITIES HAVING JURISDICTION
AHU	AIR HANDLING UNIT
AIC	AMPERE INTERRUPTING CURRENT
AL	ALUMINUM
ANSI	AMERICAN NATIONAL STANDARDS INSTITUTE
AS	AMP SWITCH
AT	AMP TRIP
ATS	AUTOMATIC TRANSFER SWITCH
ATM	ASYNCHRONOUS TRANSFER MODE
AV	AUDIO VISUAL
AWG	AMERICAN WIRE GAUGE
BAS	BUILDING AUTOMATION SYSTEM
BATT	BATTERIES
BKBD	BACKBOARD
BIL	BASIC IMPULSE INSULATION LEVEL
BKR	BREAKER
BLDG	BUILDING
C	CONDUIT; DEGREES CELSIUS
CAB	CABINET
CAT	CATEGORY
CATV	COMMUNITY ANTENNA TELEVISION
CB	CIRCUIT BREAKER
CCTV	CLOSED CIRCUIT TELEVISION
CL	CENTERLINE
CLG	CEILING
CM	CEILING-MOUNTED
CO	CONDUIT ONLY
COW	COMPUTER ON WHEELS
CR	CONTROLLED RECEPTACLE
CRP	CONTROL RELAY PANEL
CT	CURRENT TRANSFORMER
CU	COPPER
DDC	DIRECT DIGITAL CONTROL
DEMARC	DEMARCATION POINT
DF	DRINKING FOUNTAIN
DIA	DIAMETER
DISC	DISCONNECT
DISP	DISPOSAL
DIST	DISTRIBUTION
DSL	DIGITAL SUBSCRIBER LINE
DW	DISHWASHER
DWG	DRAWING
(E)	EXISTING
EA	EACH
EC	ELECTRICAL CONTRACTOR
ECB	ENCLOSED CIRCUIT BREAKER
EF	EXHAUST FAN
EIA	ELECTRONIC INDUSTRIES ASSOCIATION
ELEV	ELEVATION
EM	EMERGENCY
EMT	ELECTRICAL METALLIC TUBING
ENCL	ENCLOSURE
EPM	ELECTRONIC POWER METER
EPO	EMERGENCY POWER OFF
EQUIP	EQUIPMENT
ETR	EXISTING TO REMAIN
EV	ELECTRIC VEHICLE (CHARGER LOCATION)
EWC	ELECTRIC WATER COOLER
F	FUSE; DEGREES FAHRENHEIT
FA	FIRE ALARM
FAAP	FIRE ALARM ANNUNCIATOR PANEL
FACP	FIRE ALARM CONTROL PANEL
FBO	FURNISHED BY OWNER; FURNISHED BY OTHERS
FOIC	FURNISHED BY OWNER INSTALLED BY CONTRACTOR
FSD	FIRE SMOKE DAMPER
FUT	FUTURE
G	GROUND
GEN	GFENERATOR
GFCI	GROUND FAULT CIRCUIT INTERRUPTER
GFP	GROUND FAULT PROTECTION
GND	GROUND
GRS	GALVANIZED RIGID STEEL
HC	HORIZONTAL CROSS-CONNECT
HH	HANDHOLE
HID	HIGH INTENSITY DISCHARGE
HOA	HAND-OFF-AUTO
HP	HORSEPOWER
HTR	HEATER
HWT	HOT WATER TANK
Hz	HERTZ
IC	INTERMEDIATE CROSS CONNECT
IBC	INTERNATIONAL BUILDING CODE
IDF	INTERMEDIATE DISTRIBUTION FRAME
IEEE	INSTITUTE OF ELECTRICAL AND ELECTRONIC ENGINEERS
IG	ISOLATED GROUND
IMC	INTERMEDIATE METALLIC CONDUIT
ISDN	INTEGRATED SERVICES DIGITAL NETWORK
J	JUNCTION
kVA	KILOVOLT AMPERE
kW	KILOWATT
KCMIL	THOUSAND CIRCULAR MILS
KVAR	KILOVOLT AMPERE REACTIVE
LAN	LOCAL AREA NETWORK
LCP	LIGHTING CONTROL PANEL
LEC	LOCAL EXCHANGE CARRIER
LT(S)	LIGHT(S)
LTG	LIGHTING
LV	LOW VOLTAGE
M	METER
MAN	METROPOLITAN AREA NETWORK
MAX	MAXIMUM
MC	MAIN CROSS CONNECT; METAL CLAD (CABLE)
MCC	MOTOR CONTROL CENTER
MCB	MAIN CIRCUIT BREAKER
MDF	MAIN DISTRIBUTION FRAME
MDP	MAIN DISTRIBUTION PANEL
MECH	MECHANICAL
MFR	MANUFACTURER
MH	MANHOLE
MIN	MINIMUM
MLO	MAIN LUGS ONLY
MM	MULTIMODE
MPOE	MAIN POINT OF ENTRY
MPOP	MAIN POINT OF PRESENCE
MTD	MOUNTED
MTS	MANUAL TRANSFER SWITCH
N	NEUTRAL
(N)	NEW
NAC	NOTIFICATION APPLIANCE CIRCUIT
NEC	NATIONAL ELECTRICAL CODE
NEMA	NATIONAL ELECTRICAL MANUFACTURERS ASSOCIATION
NF	NON-FUSED
NIC	NOT IN CONTRACT
NL	NIGHT LIGHT
NREC	NON-RESIDENTIAL ENERGY CODE
OC	ON CENTER
OFC	OPTICAL FIBER CABLE
OFCI	OWNER FURNISHED CONTRACTOR INSTALLED
OH	OVERHEAD
OHL	OVERHEAD LINE
OL	OVERLOAD
OS	OCCUPANCY SENSOR
OSP	OUTSIDE PLANT
P	POLE
PBX	PRIVATE BRANCH EXCHANGE
PC	PHOTOCELL
PF	POWER FACTOR
PH	PHASE
PIR	PASSIVE INFRARED
PIV	POST INDICATOR VALVE
PNL	PANEL
POS	POINT OF SALE
PP	PATCH PANEL
PSE	PUGET SOUND ENERGY
PT	POTENTIAL TRANSFORMER
PUD	PUBLIC UTILITY DISTRICT
PV	PHOTO VOLTAIC
PVC	POLYVINYL CHLORIDE
(R)	RELOCATED EXISTING
RCP	REFLECTED CEILING PLAN
REC	RECEPTACLE
REF	REFER TO; REFRIGERATOR
REV	REVISION
RM	ROOM
RQMTS	REQUIREMENTS
RU	RACK UNIT
SAN	STORAGE AREA NETWORK
SHT	SHEET
SLC	SIGNALING LINE CIRCUIT
SM	SINGLEMODE
SMFC	SURFACE-MOUNTED OPTICAL FIBER CABINET
SMR	SURFACE METAL RACEWAY
SONET	SYNCHRONOUS OPTICAL NETWORK
SP	SERVICE PROVIDER
SPD	SURGE PROTECTIVE DEVICE
SPEC	SPECIFICATIONS
SPST	SINGLE POLE SINGLE THROW
SQ	SQUARE
ST	SHUNT TRIP
STP	SHIELDED TWISTED PAIR
SVGA	SUPER VIDEO GRAPHICS ARRAY
SW	SWITCH
SWBD	SWITCHBOARD
TBB	TELECOMMUNICATIONS BONDING BACKBONE
TBD	TO BE DETERMINED
TEL	TELEPHONE
TELCO	TELEPHONE COMPANY
TGB	TELECOMMUNICATIONS GROUNDING BUSBAR
TIA	TELECOMMUNICATIONS INDUSTRY ASSOCIATION
TMGB	TELECOMMUNICATIONS MAIN GROUNDING BUSBAR
TP	TAMPERPROOF
TR	TELECOMMUNICATIONS ROOM
TTB	TELEPHONE TERMINAL BOARD
TV	TELEVISION
TVSS	TRANSIENT VOLTAGE SURGE SUPPRESSION
TYP	TYPICAL
UC	UNDER COUNTER
UG	UNDERGROUND
UL	UNDERWRITERS LABORATORIES
UON	UNLESS OTHERWISE NOTED
UPS	UNINTERRUPTIBLE POWER SUPPLY
USB	UNIVERSAL SERIAL BUS
UTIL	UTILITY
UTP	UNSHIELDED TWISTED PAIR
UV	UTILITY VAULT; UNIT VENTILATOR
V	VOLTS
VA	VOLT AMPERES
VFD	VARIABLE FREQUENCY DRIVE
VS	VACANCY SENSOR
W	WATT; WIRE
W/	WITH
W/O	WITHOUT
W/D	WASHER/ DRYER
WA	WORKSTATION AREA
WAN	WIDE AREA NETWORK
WAP	WIRELESS ACCESS POINT
WC	WATER COOLER
WG	WIRE GUARD
WH	WATT HOUR METER
WP	WEATHERPROOF
XMFR	TRANSFORMER
Y	WYE
Z	IMPEDANCE

GENERAL NOTES

1. ALL WORK SHALL BE PERFORMED IN ACCORDANCE WITH APPLICABLE NATIONAL AND STATE CODES AS REQUIRED AND ENFORCED BY THE AHJ.
2. CONTRACTOR SHALL ACQUIRE AND PAY FOR ALL PERMITS REQUIRED FOR INSTALLATION OF WORK. REQUIRED INSPECTIONS SHALL BE ARRANGED BY THE CONTRACTOR.
3. CONTRACTOR SHALL COORDINATE WITH UTILITY COMPANY SERVICE PROVIDERS FOR THE PROJECT. INSTALLATION OF UTILITY SERVICES SHALL BE IN ACCORDANCE AND CONFIRMED WITH THE UTILITY COMPANY REQUIREMENTS. PROVIDE AN ELECTRICAL DRAWING SUBMITTAL TO UTILITY SERVICE PROVIDER FOR APPROVAL PRIOR TO ROUGH-IN AND ORDERING MATERIAL AND EQUIPMENT.
4. DRAWINGS ARE DIAGRAMMATIC. PROVIDE MATERIALS AND COMPONENTS AS REQUIRED FOR A COMPLETE OPERATIONAL SYSTEM WHETHER OR NOT SPECIFICALLY SHOWN ON THE DRAWINGS.
5. DEVICE LOCATIONS ARE AN APPROXIMATION. COORDINATE DEVICE LOCATIONS AND ELEVATIONS WITH THE PROJECT DOCUMENTS INCLUDING, BUT NOT LIMITED TO CASEWORK SHOP DRAWINGS AND THE ARCHITECTURAL ELEVATIONS PRIOR TO ROUGH-IN.
6. COORDINATE ELECTRICAL AND TELECOMMUNICATIONS WORK WITH WORK OF OTHER TRADES. REFERENCE THE MECHANICAL, ARCHITECTURAL, STRUCTURAL, CIVIL, AND LANDSCAPE DRAWINGS AND SPECIFICATIONS. COORDINATION SHALL OCCUR PRIOR TO ORDERING OF MATERIALS AND INSTALLATION OF WORK.
7. COORDINATE LOCATION OF LIGHT FIXTURES AND CEILING MOUNTED DEVICES WITH ARCHITECTURAL REFLECTED CEILING PLANS AND ELEVATIONS.
8. ALL LIGHT FIXTURES PENETRATING A RATED CEILING SHALL BE PROVIDED WITH A RATED ENCLOSURE AROUND THE FIXTURE. COORDINATE WITH ARCHITECTURAL REFLECTED CEILING PLAN.
9. SEE THE ARCHITECTURAL AND STRUCTURAL DRAWINGS FOR EXPANSION OR SEISMIC JOINT LOCATIONS. CONTRACTOR SHALL PROVIDE CONDUIT/RACEWAY EXPANSION OR SEISMIC JOINTS IN LOCATIONS WHERE CONDUITS/RACEWAYS CROSS BUILDING EXPANSION OR SEISMIC JOINTS.
10. WORK SHALL BE COMPLETED IN ACCORDANCE WITH THE PROJECT SCHEDULE. INSTALLATION SHALL BE COORDINATED WITH THE GENERAL CONTRACTOR AND ALL OTHER TRADES AT THE PROJECT SITE TO ENSURE PROJECT SCHEDULE MILESTONES ARE COMPLETED AS INDICATED.
11. THE ELECTRICAL AND LOW VOLTAGE SYSTEM DRAWINGS ARE DIAGRAMMATIC AND DO NOT SHOW EVERY PATHWAY, RACEWAY, BOX, CONDUCTOR, CABLE OR SIMILAR ITEMS FOR A COMPLETE INSTALLATION. PROVIDE ALL REQUIRED MATERIAL AND LABOR FOR COMPLETE AND OPERATIONAL ELECTRICAL AND LOW VOLTAGE SYSTEMS.
12. BRANCH CIRCUIT HOMERUNS ARE PROVIDED TO INDICATE CIRCUITS AND CONFIGURATION. SINGLE CIRCUIT HOMERUNS SERVED FROM THE SAME PANEL CAN BE COMBINED PER THE PROVIDED DIVISION 26 SPECIFICATIONS, UNLESS OTHERWISE NOTED. BRANCH CIRCUIT RACEWAY AND WIRING SHALL BE PROVIDED FROM THE HOMERUN TO DEVICES AND EQUIPMENT WITH CIRCUIT NUMBERS AS INDICATED ON THE DRAWINGS. CONDUCTOR QUANTITIES AND SIZES ARE NOTED AT HOMERUNS. RECORD DRAWINGS SHALL IDENTIFY THE INSTALLED RACEWAY ROUTING AND CIRCUITING. BRANCH CIRCUIT MINIMUM CONDUCTOR SIZE SHALL BE #12 AWG.
13. LIGHT FIXTURES MOUNTED IN CONTINUOUS ROWS SHALL BE THROUGH-WIRED VIA FIXTURE INTERNAL WIREWAYS. CIRCUITS AS INDICATED ON DRAWINGS. FIXTURES NOT LISTED FOR THROUGH WIRING SHALL BE WIRED VIA SEPARATE RACEWAY AND WIRING SYSTEM EXTERNAL TO THE FIXTURES. PROVIDE RACEWAYS, WIRING AND CONNECTIONS, AS REQUIRED, FOR A COMPLETE AND OPERATIONAL SYSTEM.
14. TELECOMMUNICATIONS AND LOW VOLTAGE CABLING INSTALLATIONS SHALL BE CONCEALED IN WALLS, CEILINGS, AND BELOW RAISED FLOOR SPACES (WHERE APPLICABLE) UNLESS OTHERWISE NOTED ON THE DRAWINGS. CABLING IN ACCESSIBLE CEILING SPACES SHALL BE INSTALLED AS OPEN CABLING ON J-HOOKS OR INDICATED SUPPORTING METHOD NEAR STRUCTURES AND WALLS OR AS NOTED ON DRAWINGS. SEE PROJECT SPECIFICATIONS FOR CABLE SUPPORT REQUIREMENTS.
15. PROVIDE FIRE-STOPPING MATERIALS OR DEVICES FOR CONDUIT AND/ OR RACEWAY SYSTEMS AT SLEEVED PENETRATIONS IN FIRE-RATED CONSTRUCTION ASSEMBLIES FOR HORIZONTAL AND INTRABUILDING CABLING PATHWAYS AND SPACES.
16. SEE TELECOMMUNICATIONS SPECIFICATION FOR BACKBONE CABLE IDENTIFICATION REQUIREMENTS CONSISTING OF A COPPER AND FIBER CABLE MARKER TAG PROVISIONS IN PULL BOXES, ENTRANCE POINTS, RISER ROOMS, TELECOMMUNICATION ROOMS, VAULTS AND AT THE POINT OF TERMINATION SUCH AS A SERVICE ENTRANCE PROTECTION BLOCK, 110-FIELD, SURFACE MOUNT FIBER CABINET OR RACK MOUNT FIBER CABINET.
17. TELECOMMUNICATIONS CABLING SHALL MAINTAIN A MINIMUM SPACING OF 12" FROM ELECTRICAL FEEDERS AND BRANCH CIRCUIT WIRING AND 12" FROM AUXILIARY SYSTEM CABLING.
18. TELECOMMUNICATIONS OPEN CABLING SHALL BE PROVIDED WITH A 6'-0" MINIMUM SPACING FROM ELECTRICAL APPARATUS SUCH AS MOTOR DRIVEN EQUIPMENT AND TRANSFORMERS. EXCEPTION: BUILDING CONSTRUCTION THAT RESULTS IN CONTINUOUS METALLIC BARRIER BETWEEN ELECTRICAL APPARATUS AND CABLE PATHWAYS.
19. PRIOR TO STARTING TELECOMMUNICATIONS AND LOW VOLTAGE SYSTEM INSTALLATION, INSPECT THE ELECTRICAL ROUGH-IN AND INSTALLED WORK OF OTHER TRADES AND VERIFY WORK IS COMPLETE TO THE POINT WHERE TELECOMMUNICATIONS AND LOW VOLTAGE SYSTEM INSTALLATION CAN PROPERLY PROCEED. NOTIFY THE ARCHITECT AND ENGINEER OF UNSATISFACTORY CONDITIONS RELATED TO THE COMPLETION OF THE WORK.
20. DO NOT BEGIN TELECOMMUNICATIONS AND LOW VOLTAGE SYSTEM INSTALLATION UNTIL ALL UNSATISFACTORY CONDITIONS HAVE BEEN ADDRESSED AND RESOLVED. PROCEEDING WITH INSTALLATION OF THE TELECOMMUNICATIONS AND LOW VOLTAGE SYSTEMS CONSTITUTES ACCEPTANCE OF CONDITIONS AS SATISFACTORY.
21. PROVIDE ROUTING OF TELECOMMUNICATIONS SYSTEM HORIZONTAL COPPER UTP TO THEIR ASSIGNED CROSS-CONNECT PER THE IDENTIFICATION LABEL PROVIDED AT EACH TELECOMMUNICATIONS DEVICE ON THE PROJECT DRAWINGS OR CONTRACTOR SHOP DRAWINGS. PROVIDE TERMINATION OF THE HORIZONTAL COPPER CABLING ON 24-PORT AND/ OR 48-PORT PATCH PANELS, UNLESS OTHERWISE NOTED.
22. THE ELECTRICAL CONTRACTOR SHALL PROVIDE ALL CONDUIT, OUTLET BOXES, JUNCTION BOXES, PULL BOXES, RACEWAY SYSTEMS, ETC. FOR ALL TELECOMMUNICATIONS AND LOW VOLTAGE SYSTEMS PER THE SCOPE OF WORK INDICATED ON THE BID DRAWINGS AND SPECIFICATIONS.

ENERGY CODE NOTES

1. LIGHTING CONTROL SYSTEMS COMMISSIONING AND COMPLETION REQUIREMENTS: TEST SYSTEMS TO ENSURE THAT BUILDING SYSTEMS HAVE BEEN INSTALLED AND FUNCTION PROPERLY, EFFICIENTLY AND CAN BE MAINTAINED IN ACCORDANCE WITH THE CONTRACT DOCUMENTS AND OPERATIONAL REQUIREMENTS PER ENERGY CODE ENFORCED BY THE AHJ. REFER TO SPECIFICATION SECTION 26 08 00 FOR ADDITIONAL COMMISSIONING REQUIREMENTS.

TCA
ARCHITECTURE □ PLANNING □ DESIGN
6211 ROOSEVELT WAY NORTHEAST
SEATTLE, WA 98115
tel: □206□522-3830
□ax: □206□522-2456

CASE ENGINEERING
ELECTRICAL | LIGHTING | TELECOM | SECURITY
19515 North Creek Parkway, Suite 302
Bothell, WA 98011
425-402-9400 office@caseeng.com
17330

MICHAEL S CASE
STATE OF WASHINGTON
07/21/2020
33273
REGISTERED
PROFESSIONAL ENGINEER

BID SET

No.	Descri□tion	Date:

Project Title:

FIRE STATION 24
City of Kirkland
Kirkland, Washington

Sheet Title:

ELECTRICAL ABBREVIATIONS AND GENERAL NOTES

Scale: NOTED
Project No. : 16-46
Date : July 21, 2020

Sheet Number :

E0.2

Provided to Builders Exchange of WA, Inc. For usage Conditions Agreement see www.bxwa.com - Always Verify Scal

TE□E□□MM□□□□T□□□S R□□□H□□□ S□HED□□E

S□M□□□	M□□□T□□□ HE□□HT	DE□□□E □□ME	□□T□ET □□□			□□□D□□T			DET□□□	□□TES
			□T□	S□□E	M□D R□□□	□T□	S□□E	TERM□□□T□□□ □□□□T□□□		
◁	STANDARD, UON	CATEGORY 6A DEVICE	1	4-11/16"	SINGLE GANG	1	1-1/4"	ACCESSIBLE CLG SPACE		-
◁ AC	ABOVE COUNTER	CATEGORY 6A DEVICE	1	4-11/16"	SINGLE GANG	1	1-1/4"	ACCESSIBLE CLG SPACE		2
◁ W	□44"	CATEGORY 6A WALL PHONE DEVICE	1	4-11/16"	SINGLE GANG	1	1"	ACCESSIBLE CLG SPACE		-
◁ WAP	CEILING/ BOTTOM BEAM	CATEGORY 6A WAP DEVICE	1	4-11/16"	SINGLE GANG	1	1-1/4"	CLG SPACE		1
◁ WAP	ABOVE CLG	CATEGORY 6A WAP DEVICE	-	-	-	-	-	-		-

□E□ER□□ □□TE 1□MOUNTING HEIGHTS NOTED ON THE SCHEDULE REFER TO CENTER OF BACK BOX.
□E□ER□□ □□TE □□REFERENCE DIVISION 27 AND 28 ROUGH-IN SCHEDULES FOR TELECOMMUNICATIONS DEVICES AND CONNECTIVITY OF IP DEVICES.
□E□ER□□ □□TE □□PROVIDE INSULATING BUSHING ON CONDUIT END AT TERMINATION IN ACCESSIBLE CEILING PRIOR TO CABLE INSTALLATION.
□□TE 1□PROVIDE ROUGH-IN FOR HARD-LID AND OPEN TO STRUCTURE CEILINGS. MOUNT FLUSH IN HARD-LID CEILINGS AND SURFACE MOUNT IN OPEN TO STRUCTURE CEILING.
□□TE □□MOUNT DEVICE ABOVE COUNTER TO MATCH ELECTRICAL RECEPTACLE HEIGHT AND ORIENTATION (VERTICAL OR HORIZONTAL□
□□TE □□NOT USED

□□D□□ □S□□□ R□□□H□□□ S□HED□□E

S□M□□□	M□□□T□□□ HE□□HT	DE□□□E □□ME	□□T□ET □□□			□□□D□□T			DET□□□	□□TES
			□T□	S□□E	M□D R□□□	□T□	S□□E	TERM□□□T□□□ □□□□T□□□		
HTV	STANDARD, UON	CATV OUTLET	1	4"S	SINGLE GANG	1	3/4"	ACCESSIBLE CLG SPACE	-	-

□E□ER□□ □□TE 1□MOUNTING HEIGHTS INDICATED ON THE SCHEDULE REFER TO CENTER OF BACK BOX.

□□□ESS □□□TR□□ R□□□H□□□ S□HED□□E

S□M□□□	M□□□T□□□ HE□□HT	DE□□□E □□ME	□□T□ET □□□			□□□D□□T			DET□□□	□□TES
			□T□	S□□E	M□D R□□□	□T□	S□□E	TERM□□□T□□□		
HS CR	□44"	CARD READER	1	4"S	SINGLE GANG	1	3/4"	ACCESSIBLE CLG SPACE		3
HS CR/K	□44"	CARD READER WITH KEYPAD	1	4"S	SINGLE GANG	1	3/4"	ACCESSIBLE CLG SPACE		3
HS CR/M	□44"	CARD READER, MULLION	-	-	-	1	3/4"	ACCESSIBLE CLG SPACE		-
DP	TOP OF FRAME	DOOR POSITION SWITCH	SEE NOTE		SEE NOTE	1	3/4"	ACCESSIBLE CLG SPACE		2,5
ECB	□48"	EMERGENCY CALL BOX	-	SPECIALTY BACK BOX	-	1	3/4"	ACCESSIBLE CLG SPACE		4
RX	-	INTEGRAL MICRO REX	-	-	-	-	-	-		2
EL	SEE NOTE	ELECTRIFIED LOCKSET/ EXIT DEVICE	VARIES	MASONRY	-	VARIES	3/4"	ACCESSIBLE CLG SPACE		2,6
ES	SEE NOTE	ELECTRIFIED DOOR STRIKE	1	MASONRY	-	1	3/4"	ACCESSIBLE CLG SPACE		2,6

□E□ER□□ □□TE 1□MOUNTING HEIGHTS INDICATED ON THE SCHEDULE REFER TO CENTER OF BACK BOX.
□□TE 1□PROVIDE CATEGORY 6A CABLING □BY 271100□FOR DEVICE NETWORK CONNECTION.
□□TE □□COORDINATE RE□UIREMENTS WITH SECURITY CONTRACTOR AND DOOR HARDWARE CONTRACTOR.
□□TE □□SINGLE GANG MASONRY BACK BOX ACCEPTABLE FOR EXTERIOR MOUNTED DEVICE.
□□TE □□PROVIDE CATEGORY 6A CABLING □BY 271100□FOR DEVICE ANALOG TELEPHONE LINE CONNECTION.
□□TE □□WHERE DOOR FRAME IS FILLED, PROVIDE SINGLE GANG MASONRY BACK BOX AT TOP OF DOOR FRAME AT 12" ON CENTER FROM STRIKE SIDE OF DOOR.
□□TE □□PROVIDE SINGLE GANG MASONRY BACK BOX AT CENTER HINGE ON BOTH SIDES OR AT STRIKE.

□IDE□ S□R□E□□□□□E R□□□H□□□ S□HED□□E

S□M□□□	M□□□T□□□ HE□□HT	DE□□□E □□ME	□□T□ET □□□			□□□D□□T			DET□□□	□□TES
			□T□	S□□E	M□D R□□□	□T□	S□□E	TERM□□□T□□□ □□□□T□□□		
C	CEILING	IP CAMERA	1	4"S	DOUBLE GANG	1	3/4"	ACCESSIBLE CLG SPACE		1,3
HC	VARIES	IP CAMERA	1	4"S	DOUBLE GANG	1	3/4"	ACCESSIBLE CLG SPACE		1,3,4
HC	VARIES	MULTI-LENS IP CAMERA	1	4"S	DOUBLE GANG	1	3/4"	ACCESSIBLE CLG SPACE		1,3,4
C	CEILING	MULTI-LENS IP CAMERA	1	4"S	DOUBLE GANG	1	3/4"	ACCESSIBLE CLG SPACE		1,3

□E□ER□□ □□TE 1□MOUNTING HEIGHTS INDICATED ON THE SCHEDULE REFER TO CENTER OF BACK BOX.
□□TE 1□PROVIDE CATEGORY 6A CABLING □BY 271100□FOR DEVICE NETWORK CONNECTION.
□□TE □□PROVIDE OPTICAL FIBER CABLING □BY 271100□AND MEDIA CONVERTER □BY 282300□FOR DEVICE NETWORK CONNECTION.
□□TE □□COORDINATE BACK BOX AND MUD RING WITH VIDEO SURVEILLANCE CONTRACTOR PRIOR TO ROUGH-IN.
□□TE □□SINGLE GANG MASONRY BACK BOX ACCEPTABLE FOR EXTERIOR CAMERA LOCATION.

MECHANICAL EQUIPMENT CONNECTION SCHEDULE

TAG	DESCRIPTION	HP /KW /VA	VOLTS / PHASE	MCA	FUSE (MOCP)	DISC. SWITCH	STARTER	CIRCUIT	FEEDER SIZE	TAG	REMARKS	NOTES
FC-1	FAN COIL	-	208V/1PH	1.55	-	30		M1-1,3	3/4"C, 3#12, 1#12 GND	FC-1		
FC-2	FAN COIL	-	208V/1PH	0.28	-	30		M1-1,3	3/4"C, 3#12, 1#12 GND	FC-2		
FC-3	FAN COIL	-	208V/1PH	0.5	-	30		M1-1,3	3/4"C, 3#12, 1#12 GND	FC-3		
FC-4	FAN COIL	-	208V/1PH	1.56	-	30		M1-1,3	3/4"C, 3#12, 1#12 GND	FC-4		
FC-5	FAN COIL	-	208V/1PH	4.16	-	30		M1-1,3	3/4"C, 3#12, 1#12 GND	FC-5		
FC-6	FAN COIL	-	208V/1PH	0.38	-	30		M1-1,3	3/4"C, 3#12, 1#12 GND	FC-6		
FC-7	FAN COIL	-	208V/1PH	4.16	-	30		M2-25,27	3/4"C, 3#12, 1#12 GND	FC-7		
FC-8	FAN COIL	-	208V/1PH	0.19	-	30		M2-25,27	3/4"C, 3#12, 1#12 GND	FC-8		
FC-9	FAN COIL	-	208V/1PH	0.19	-	30		M2-25,27	3/4"C, 3#12, 1#12 GND	FC-9		
FC-10	FAN COIL	-	208V/1PH	0.19	-	30		M2-25,27	3/4"C, 3#12, 1#12 GND	FC-10		
FC-11	FAN COIL	-	208V/1PH	0.19	-	30		M2-25,27	3/4"C, 3#12, 1#12 GND	FC-11		
FC-12	FAN COIL	-	208V/1PH	0.19	-	30		M2-17,19	3/4"C, 3#12, 1#12 GND	FC-12		
FC-13	FAN COIL	-	208V/1PH	0.19	-	30		M2-17,19	3/4"C, 3#12, 1#12 GND	FC-13		
FC-14	FAN COIL	-	208V/1PH	0.19	-	30		M2-17,19	3/4"C, 3#12, 1#12 GND	FC-14		
FC-15	FAN COIL	-	208V/1PH	0.19	-	30		M2-17,19	3/4"C, 3#12, 1#12 GND	FC-15		
FC-16A	FAN COIL	-	208V/1PH	0.63	-	30		M2-21,23	3/4"C, 3#12, 1#12 GND	FC-16A		
FC-16B	FAN COIL	-	208V/1PH	0.63	-	30		M2-21,23	3/4"C, 3#12, 1#12 GND	FC-16B		
HOOD	HOOD	-	120V/1PH	-	-	-		M1-13	3/4"C, 2#12, 1#12 GND	HOOD		5
CM-1	CONDENSER MOTOR	-	208V/3PH	31	(45)	60	YES	M1-14,16,18	1"C, 4#6, 1#10 GND	CM-1		2
CM-2	CONDENSER MOTOR	-	208V/3PH	23	(35)	60	YES	M2-1,3,5	1"C, 4#8, 1#10 GND	CM-2		2
CM-3	CONDENSER MOTOR	-	208V/3PH	23	(35)	60	YES	M2-7,9,11	1"C, 4#6, 1#10 GND	CM-3		2
BC-1	BRANCH CIRCUIT CONTROLLER	-	208V/1PH	0.65	-	30		M1-19,21	3/4"C, 3#12, 1#12 GND	BC-1		
BC-2	BRANCH CIRCUIT CONTROLLER	-	208V/1PH	0.87	-	30		M2-12,15	3/4"C, 3#12, 1#12 GND	BC-2		
BC-3	BRANCH CIRCUIT CONTROLLER	-	208V/1PH	0.87	-	30		M2-13,15	3/4"C, 3#12, 1#12 GND	BC-3		
ERV-1	ENERGY RECOVERY VENTILATOR	-	208V/3PH	47.2	(50)	60	VFD	M1-26,28,30	1"C, 4#6, 1#10 GND	ERV-1		2
ERV-2	ENERGY RECOVERY VENTILATOR	-	208V/3PH	44.6	(45)	60	VFD	M1-20,22,24	1"C, 4#6, 1#10 GND	ERV-2		2
EF-1	EXHAUST FAN	1-1/2 HP	208V/3PH	-	-	Sm	YES	M1-2,4,6	3/4"C, 4#12, 1#12 GND	EF-1		7
EF-2	EXHAUST FAN	1/6 HP	120V/1PH	-	-	Sm		M1-8	3/4"C, 2#10, 1#10 GND	EF-2		5
MUA	KITCHEN SUPPLY FAN	1/2 HP	120V/1PH	-	-	30		M1-5	3/4"C, 2#12, 1#12 GND	MUA		6
DH-1	ELECTRIC DUCT HEATER	15KW	208V/3PH	-	-	60		M1-7,9,11	1-1/4"C, 4#4, 1#8 GND	DH-1		6
DH-2	ELECTRIC DUCT HEATER	8KW	208V/3PH	-	-	30		M2-38,40,42	3/4"C, 4#10, 1#10 GND	DH-2		
KEF	KITCHEN HOOD EXHAUST FAN	3/4 HP	120V/1PH	-	-	30		M1-12	3/4"C, 2#12, 1#12 GND	KEF		8
IH-1	INFARED TUBE HEATER	5A	120V/1PH	-	-	Sm		M1-23	3/4"C, 2#12, 1#12 GND	IH-1		
IH-2	INFARED TUBE HEATER	5A	120V/1PH	-	-	Sm		M1-25	3/4"C, 2#12, 1#12 GND	IH-2		
IH-3	INFARED TUBE HEATER	5A	120V/1PH	-	-	Sm		M1-27	3/4"C, 2#12, 1#12 GND	IH-3		
CF-1	CEILING FAN	1/4HP	120V/1P	-	-	Sm		M1-29	3/4"C, 2#12, 1#12 GND	CF-1		
CF-2	CEILING FAN	1/4HP	120V/1P	-	-	Sm		M1-31	3/4"C, 2#12, 1#12 GND	CF-2		
CF-3	CEILING FAN	1/4HP	120V/1P	-	-	Sm		M2-24	3/4"C, 2#12, 1#12 GND	CF-3		
L-1	LOUVER MOTORIZED DAMPER		120V/1PH	-	-	Sm		M1-33	3/4"C, 2#12, 1#12 GND	L-1		1
L-2	LOUVER MOTORIZED DAMPER		120V/1PH	-	-	Sm		M1-15	3/4"C, 2#12, 1#12 GND	L-2		1
RCP	RADIANT CEILING PANEL	750W	208V/1PH	-	-			VARIOUS	3/4"C, 2#12, 1#12 GND	RCP	SEE E4.1 FOR CKT'G	4
EWH-1	ELECTRIC WALL HEATER	750W	120V/1PH	-	-			VARIOUS	3/4"C, 2#12, 1#12 GND	EWH-1	SEE E4.1 FOR CKT'G	
EWH-2	ELECTRIC WALL HEATER	1500W	120V/1PH	-	-			VARIOUS	3/4"C, 2#12, 1#12 GND	EWH-2	SEE E4.1 FOR CKT'G	
CP	CIRCULATION PUMP	83W	120V/1PH	-	-	Sm		M2-31	3/4"C, 2#12, 1#12 GND	CP		
WH-1	WATER HEATER	15A	120V/1PH	-	-	Sm		M2-29	3/4"C, 2#12, 1#12 GND	WH-1		
BF-1	BOTTLE FILLER	?	120V/1PH	-	-	-		M2-33	3/4"C, 2#12, 1#12 GND	BF-1		
NF-1	NEDERMAN FAN	7.5HP	208V/3PH	-	-	60	VFD	M2-2,4,6	1-1/4"C, 4#4, 1#8 GND	NF-1		6

GENERAL EQUIPMENT CONNECTION SCHEDULE NOTES
(APPLIES TO ALL EQUIPMENT LISTED IN SCHEDULE)

A. THE ABOVE INFORMATION IS FOR A SPECIFIC MANUFACTURER. THE ACTUAL MANUFACTURER FOR THE EQUIPMENT MAY BE DIFFERENT. COORDINATE WITH MECHANICAL EQUIPMENT SUBMITTALS FOR ACTUAL LOADS, CIRCUIT AMPACITY AND OVERCURRENT PROTECTION REQUIREMENTS PRIOR TO ELECTRICAL ROUGH-IN.
B. LOCATE ALL DISCONNECTING MEANS PER NEC AND AHJ REQUIREMENTS. STARTERS ARE SEPARATELY MOUNTED UNLESS OTHERWISE NOTED.
C. ABBREVIATIONS:
HRS: HORSEPOWER RATED MOTOR DISCONNECT SWITCH WITH OVERLOAD PROTECTION, 16-AMP MINIMUM, RED PILOT LIGHT. PROVIDE 1-POLE OR 2-POLE AS REQUIRED.
Sm: MOTOR RATED TOGGLE SWITCH.
TS: TOGGLE SWITCH, 16 AMP MINIMUM, RED PILOT LIGHT. PROVIDE 1-POLE OR 2-POLE AS REQUIRED.
D. ALL DISCONNECTS ARE 3 POLE UNLESS NOTED OTHERWISE.
E. PROVIDE A ROOFTOP WEATHERPROOF GFI DUPLEX RECEPTACLE WITHIN 25 FEET OF ALL ROOF MOUNTED HVAC UNITS AS REQUIRED BY NEC.
F. CONNECT FIRE SMOKE DAMPERS TO A 120VAC 20 AMP CIRCUIT ROUTED THROUGH A RELAY CONTACT (N.C.) IN THE FIRE ALARM CONTROL PANEL. REFER TO MECHANICAL DRAWINGS FOR ALL FIRE SMOKE DAMPER LOCATIONS AND QUANTITIES. PROVIDE ALL APPURTENANCES AS REQUIRED. PROVIDE DISCONNECT TOGGLE SWITCH WITHIN SIGHT OF THE DAMPER MOTOR CONTROLLER AND DAMPER MOTOR.

SCHEDULE NOTES
(APPLIES TO SPECIFIC EQUIPMENT AS NOTED IN "NOTES" COLUMN)

1. CONTROL BY DIVISION 23 CONTRACTOR.
2. PROVIDE NSR ENCLOSURE FOR FUSED DISCONNECT SWITCH.
3. FURNISH DUCT SMOKE DETECTOR(S) FOR INSTALLATION BY DIVISION 23 CONTRACTOR. HVAC UNITS OVER 2,000 CFM TO HAVE DUCT DETECTOR IN RETURN AIR DUCT. UNITS OVER 15,000 CFM TO HAVE DUCT DETECTORS IN RETURN AND SUPPLY AIR DUCTS. COORDINATE WITH DIVISION 23 FOR QUANTITY REQUIRED. PROVIDE CONNECTION AT THE HVAC UNIT FOR SHUTDOWN ON ALARM. PROVIDE CONNECTION TO THE FIRE ALARM CONTROL PANEL AS REQUIRED. ALL WIRING TO BE IN EMT CONDUIT.
4. LINE VOLTAGE THERMOSTAT FURNISHED BY MECHANICAL, INSTALLED BY ELECTRICAL.
5. DIVISION 26 SHALL CIRCUIT EXHAUST FAN VIA WALL SWITCH FURNISHED BY DIVISION 23. SEE DETAIL 5, SHEET M3.4 FOR ADDITIONAL INFORMATION.
6. NEDERMAN FAN POWERED VIA NEDERMAN CONTROL PANEL. COORDINATE INSTALLATION REQUIREMENTS WITH NEDERMAN VENDOR AND PROVIDE.
7. CONTROLLED BY WALL TIMER BY DIV 23. SEE DETAIL 6, SHEET E5.1 FOR ADDITIONAL INFORMATION.
8. KITCHEN HOOD, MUA, KEF, AND DUCT HEATER ARE INTERLOCKED. SEE DETAIL 6, SHEET M3.4 FOR ADDITIONAL INFORMATION.

TCA
ARCHITECTURE □ PLANNING □ DESIGN
6211 ROOSEVELT WAY NORTHEAST
SEATTLE, WA 98115
tel: (206) 522-3830
fax: (206) 522-2456

CASE ENGINEERING
ELECTRICAL | LIGHTING | TELECOM | SECURITY
19515 North Creek Parkway, Suite 302
Bothell, WA 98011
425-402-9400 office@caseeng.com
17330

MICHAEL S CASE
STATE OF WASHINGTON
07/21/2020
33273
REGISTERED
PROFESSIONAL ENGINEER

BID SET

No.	Description	Date

Project Title:

FIRE STATION 24
City of Kirkland
Kirkland, Washington

Sheet Title:

MECHANICAL EQUIPMENT CONNECTION SCHEDULE

Scale: NOTED
Project No. : 16-46
Date : July 21, 2020

Sheet Number :

E0.3

Provided to Builders Exchange of WA, Inc. For usage Conditions Agreement see www.bxwa.com - Always Verify Scal

□□□HT□□□ □□□T□RE S□HED□□E

T□□E	DES□R□□T□□□	□□M□	□ □TTS□□□T
	□□TER□□R		
F1	RECESSED 2x2 DIRECT/INDIRECT TROFFER, NOMINALLY 2□x 2□x 4" WITH EXTRUDED ACRYLIC FLATE LENS WITH DIFFUSE CENTER OPTIC 2297 LUMENS, 3000K, 80 CRI. 0-10V DIMMING DRIVER WHERE SHOWN ON PROJECT DOCUMENTS PROVIDE FLANGE MOUNTING KIT. FINELITE HPR 2X2-SCO LITHONIA 2ALL2-33L SERIES PINNACLE LU22S SERIES HE WILLIAMS ATI22 SERIES	LED	29
F1X	SIMILAR TO F2 EXCEPT WITH EMERGENCY BACK UP.	LED	29
F2	SURFACE/PENDANT/WALL MOUNTED LED, NOMINALLY 4□LONG BY 2.5" S□□UARE WITH WRAPAROUND LENS WITH 0-10V DIMMING BALLAST. NOMINAL LUMENS 4000 LUMENS PER 4□0", 3000K 80 CRI. SURFACE MOUNT EXCEPT FOR KITCHEN. IN KITCHEN PROVIDE 6" AIRCRAFT CABLE MOUNT HE WILLIAMS LLMS8 S□ EDDSD/LIT SERIES ARCHITECTURAL LIGHTING WORKS TRIPLANE SERIES VOIGT LIGHTING TMC-320 LED SERIES PHILIPS DAYBRITE LF SERIES PRUDENTIAL S1 LED SERIES METALUX SNLED LENSED SERIES	LED	26
F2X	SIMILAR TO F2 EXCEPT WITH EMERGENCY BACK UP.	LED	26
F3	WALL MOUNTED, NOMINALLY 28"x 3"x 4" VANITY LIGHT, WHITE ACRYLIC DIFFUSER WITH METAL END CAPS IN MANUFACTURER® STANDARD FINISH AS SELECTED BY ARCHITECT. CENTER BETWEEN CEILING AND MIRROR. CENTER HORI□ONTALLY WITH MIRROR. COORDINATE PRIOR TO ROUGH-IN. 3000K, 80 CRI. 82 LUMENS PER WATT OXYGEN APOLLO 3-5104-14 AFX ALV49053600L30SND2 SERIES TERON CPR24 SERIES EVERGREEN LIGHTING WLCLED SERIES	LED	12
F4	RECESSED SHOWER LIGHT WITH 6" APERTURE. DEAD FRONT REGRESSED LENS AND WHITE TRIM RING. 2000 LUMENS, 3500K 80CRI. GOTHAM EVO30-15-6-DFDAMF SERIES HE WILLIAMS LEDPSL60 PATHWAY 6VLEDFRPWL LIGHTOLIER OM6LED SERIES HALO HC6-HM6-61PS SERIES	LED	10
F4X	SIMILAR TO F4 EXCEPT WITH EMERGENCY BACK UP.		
F5	PENDANT MOUNTED LINEAR DIRECT/INDIRECT LED, NOMINALLY 4" HIGH BY 2" WIDE, 804 LUMENS PER FOOT UP AND DOWN, 3000K, 80 CRI. LENGTHS AS SHOWN ON PROJECT DOCUMENTS. FINELITE HP2-ID-S-H-830 SERIES GAMMALUX GBEAM GB242-LED SERIES MARK S2LID SERIES PINNACLE EX3BWA SERIES	LED PER 4□	42
F6	CHAIN MOUNTED LENSED LINEAR LED 8□0" LOW BAY WITH INTEGRAL DAYLIGHT SENSING. SUITABLE FOR CHAIN MOUNTING. 4000 MINIMUM LUMENS PER 4□3000K, 80 CRI. LENGTHS AS SHOWN ON PROJECT DOCUMENTS. SEE ARCHITECTURAL PLANS FOR MOUNTING HEIGHTS. GE ALBEO ALC5 PHILIPS LBK-40L840-- SERIES LITHONIA CLX SERIES ILP F□ SERIES	LED PER 8□	76
F6X	SIMILAR TO F7 EXCEPT WITH EMERGENCY BATTERY BACK UP.	LED	76
F7	WALL MOUNTED LINEAR BED LIGHT, NOMINALLY 7" DEEP BY 6" WIDE BY 3□0" LONG WITH INDIRECT AND DIRECT OPTICS. DIMMING DRIVER. DUST COVER. 3000K, 80 CRI. 82 LUMENS PER WATT PRUDENTIAL P46-LED35-03-SAL-SO-FINISH-D1R/ASY-R-SC-DM10-WS GAMMALUX GBEAM BB242-LED SERIES MARK S2LWD SERIES PINNACLE EX3BWA SERIES	LED	13
F8	RECESS MOUNTED WOOD SLAT MOUNTED LINEAR LED. NOMINALLY 2" WIDE WITH LENGTHS AS SHOWN ON PROJECT DOCUMENTS. COORDINATE MOUNTING HARDWARE WITH CEILING CONTRACTOR PRIOR TO ROUGH IN. LENS TO BE 120 DEGRESS DISTRIBUTION WITH STANDARD OUTPUT, 124 LUMENS PER FOOT, 3500K 80 CRI WITH 0-10V REMOTE DIMMING DRIVERS. SENSO ILLUMINII VESTA 2 FOCAL POINT SEEM 2 A LIGHT ACLS5	LED PER 4□	28
F8X	SIMILAR TO F8 EXCEPT WITH BATTERY BACK UP.	LED	28
F8AX	SIMILAR TO F8 EXCEPT 3□IN LENGTH.		
F9	PENDANT MOUNTED MONO POINT DECORATIVE LED WITH CANOPY MOUNTED 0-10V DIMMING DRIVER. CORD, DECORATIVE SHADE AND FINISHES AS SELECTED BY ARCHITECT. 3000K, 80CRI CONTEC CRSB-D□□RCD2 TEGAN TG-MKP SERIES LITON SEVILLE SERIES	LED	8
F10	UNDER CABINET LIGHT, SOLID FRONT, NOMINALLY 2□x 2" x 1" DEEP. EXTRUDED ALUMINUM BODY WITH ONE HIGH EFFICIENCY LED EVERY 2 INCHES. WITH INTEGRAL DIMMING POWER SUPPLY. COORDINATE WITH UNDERCABINET SUPPORTS PRIOR TO ROUGH-IN. 3000K, 80 CRI HE WILLIAMS 1SF SERIES KENELL MAUCLED SERIES AIREY THOMPSON 13A SERIES FAIL SAFE UCL SERIES	LED PER 4□	6
F10A	SURFACE MOUNTED LOW VOLTAGE PUCK LIGHT, 300 LUMEN, 3500K, 80 CRI WITH REMOTE 60W DRIVER COORDINATE PUCK LIGHT MOUNTING AND REMOTE DRIVER MOUNTING PRIOR TO ROUGH IN. NORA LIGHTING NMP LED WITH 60W REMOTE DRIVER LUCIFER LIGHTING LPK SERIES WITH REMOTE 60W DRIVER CSL RASCAL WITH REMOTE 60W DRIVER	LED	60
F11	NOT USED.		
F12	PENDANT MOUNTED LINEAR LED, 1.38" WIDE WITH LENGTHS AS SHOWN ON PROJECT DOCUMENTS. COORDINATE MOUNTING HARDWARE WITH CEILING CONTRACTOR PRIOR TO ROUGH IN. LENS TO BE 120 DEGRESS DISTRIBUTION WITH STANDARD OUTPUT, 792 LUMENS PER FOOT, 3500K 80 CRI WITH 0-10V REMOTE DIMMING DRIVERS. VODE □IPTWO 707 SERIES GOLDENEYE AIRELIGHT NOVA 2 SERIES TGS TSPEC SERIES	LED PER 4□	16
F13	RECESSED STEP LIGHT, FACEPLATE NOMINALLY 4.5" S□UARE DRY WALL MOUNTING FC LIGHTING FCSL540 SERIES CW COLE LIGHTING L121 SERIES TIVOLI VENTRINELLA	LED	5
F14	PENDANT MOUNTED LINEAR DIRECT/INDIRECT LED, NOMINALLY 4" HIGH BY 2" WIDE, 4221LUMENS PER 4□FOOT WITH UP AND DOWN, 3500K, 80 CRI. INTEGRAL DAYLIGHT SENSOR FINELITE HP2-ID-H-B-835 OBD SERIES GAMMALUX GBEAM GB242-LED SERIES ARCHITECTURAL LIGHT WORKS HBEAM 3.5 PINNACLE EX3BWA SERIES	LED	42
X1	EDGE LITE EXIT SIGN, UNIVERSAL MOUNTING, GREEN LED WITH INTEGRAL BATTERY BACK UP. LITHONIA LRP EL N SERIES CHLORIDE CN SERIES EXITRONIX V902-U-WB-GC-BA E3 ISOLITE SERIES DUALLITE LES SERIES SURELITE ES SERIES MULE LIGHTING CEL SERIES	LED	5

□□□HT□□□ □□□T□RE S□HED□□E

T□□E	DES□R□□T□□□	□□M□	□ □TTS□□□T
	E□TER□□R		
FE1	POLE MOUNTED LED LUMINAIRE WITH TYPE IV DISTRIBUTION RECTANGULAR HOUSING WITH POLE ARM MOUNTING, 3000K, 80CRI. 4128 LUMENS. 20□S□UARE STEEL POLE ON 3□PREMANUFACTURERED POLE BASE. LUMINIARE ARM AND POLE TO BE MANUFACTURERS STANDARD FINISH AS SELECTED BY ARCHITECH. McGRAW EDISON GLEON AF 1 LITHONIA DSX0-LED-P1-30K-T4M SERIES WITH RSS20 POLE GE LIGHTING EVOLVE SERIES BEACON-SPAULDING VPS LUMINAIRE WITH SPAULDING POLE GARDCO GULLWING SERIES	LED	65
FE2	POLE MOUNTED LED LUMINAIRE WITH TYPE II DISTRIBUTION RECTANGULAR HOUSING WITH POLE ARM MOUNTING, 3000K, 80CRI. 4128 LUMENS. 20□S□UARE STEEL POLE ON 3□PREMANUFACTURERED POLE BASE. LUMINIARE ARM AND POLE TO BE MANUFACTURERS STANDARD FINISH AS SELECTED BY ARCHITECH. McGRAW EDISON GLEON SERIES LITHONIA DSX0-P2-40K-T2M SERIES WITH RSS20 POLE GE LIGHTING EVOLVE SERIES BEACON-SPAULDING VPS LUMINAIRE WITH SPAULDING POLE GARDCO GULLWING SERIES	LED	65
FE3	WALL MOUNTED LED CYLINDER, NOMINALLY 12" HIGH BY 6" DIAMETER, EXTRUDED ALUMINUM HOUSING. SEE ARCHITECTURAL PLANS FOR MOUNTING LOCATION. MINIMUM OF 1190 LUMENS, 4000K, 80 CRI. DOWNLIGHT ONLY. SISTEMALUX MINISLOT SERIES LIGMAN JET ROUND SERIES FC LIGHTING FCC612WM SERIES GOTHAM ICO CLY-40/15 SERIES	LED	14
FE3X	SIMILAR TO FE3 WITH REMOTELY MOUNTED EMERGENCY MINI INVERTER WITH 90 MINUTE BATTERY BACK UP.	LED	14
FE4X	RECESSED LED DOWNLIGHT 6" CLEAR SPECULAR APERATURE, 2000 LUMENS MEDIUM DISTRIUBTION, 3000K, REGRESSED WITH LENS AND EMERGENCY BACK UP. GOTHAM EVO 6DFR CONTECH R6NC SERIES	LED	23
FE5	WALL MOUNTED LED WITH TYPE IV DISTRIBUTION, NOMINALLY 6"x 12" x 15", 3000K, 80 CRI. MOTION SENSOR DIMMING CONTROL. WHEN NO MOTION IS SENSED THE FIXTURE WILL REDUCE TO 50 PERCENT LUMEN OUTPUT. MCGRAW EDISON GWC AF 01 T4W SERIES GE LIGHTING EWS3 SERIES BEACON TRAVERSE TRV-D/24NB55-4K-T4 SERIES VISIONAIRE LIGHTING VSC-1 SERIES LITHONIA DSXW1-LED-20C-530-40K SERIES	LED	39
FE6	NOT USED		
FE7	RECESSED LINEAR LED, 375 LUMENS PER FOOT, 4000K, 80 CRI WITH FLUSH DOWNLIGHT DIFFUSER, DRYWALL FLANGE MOUNTING AND LENGTHS SHOWN ON PROJECT DOCUMENTS. WET LOCATION LISTED. SENSO ILLUMINII VESTA 2 WET FOCAL POINT SEEM 2 A LIGHT ACLS5	LED PER 4□	19
FE8	SURFACE WALL MOUNTED LINEAR LED, WITH EXTRUDED ALUMINUM HOUSING. NOMINALLY 900 LUMENS PER FOOT WITH 0-10V DIMMING DRIVER. COORDINATION MOUNTING LOCATION WITH ARCHITECTURAL PLANS. UL WET LOCATION LISTED. KURT□ION WLFPA SERIES PARMOUNT INDUSTRIES C214 SERIES LCD RW3-LED SERIES BARTCO BBW215 SERIES	LED PER 4□	29
FE8X	SIMILAR TO FE8 EXCEPT WITH EMERGENCY BACK UP.	LED PER 4□	29
FE8A	SIMILAR TO FE8 EXCEPT 2□IN LENGTH.	LED PER 2□	15
FE8AX	SIMILAR TO FE8A EXCEPT WITH EMERGENCY BACK UP.	LED PER 2□	15

TCA
ARCHITECTURE □ PLANNING □ DESIGN
6211 ROOSEVELT WAY
NORTHEAST
SEATTLE, WA 98115
tel: (206)522-3830
fax: (206)522-2456

CASE ENGINEERING
ELECTRICAL | LIGHTING | TELECOM | SECURITY
19515 North Creek Parkway, Suite 302
Bothell, WA 98011
425-402-9400 office@caseeng.com
17330

MICHAEL S CASE
STATE OF WASHINGTON
07/21/2020
33273
REGISTERED
PROFESSIONAL ENGINEER

BID SET

No.	Descri□tion	Date:

Project Title:

FIRE STATION 24
City of Kirkland
Kirkland, Washington

Sheet Title:

LIGHTING FIXTURE SCHEDULE

Scale: NOTED
Project No. : 16-46
Date : July 21, 2020

Sheet Number :

E0.4

Provided to Builders Exchange of WA, Inc. For usage Conditions Agreement see www.bxwa.com - Always Verify Scal

Lighting Summary — LGT-SUM

2015 Washington State Energy Code Compliance Forms for Commercial Buildings including R2, R3, R4 over 3 stories and all R1 — Revised August 2016

Project Info	Project Title:	KIRKLAND FS 24	Date 5/29/2020
Compliance forms do not require a password to use. *Instructional and calculating cells are write-protected.*	*Applicant Information. Provide contact information for individual who can respond to inquiries about compliance form information provided.*		For Building Department Use
	Company Name:	CASE ENGINEERING	
	Company Address:	19515 NORTH CREEK PKWAY SUITE 302 BOTHELL WA	
	Applicant Name:	STEPHANIE ENLOW	
	Applicant Phone:	425-402-8400 EXT 16	
	Applicant Email:	STEPHANIE@CASEENG.COM	

Project Description

■ New Building ■ Addition ■ Alteration ■ Plans Included

Include PROJ-SUM form (included in envelope forms workbook) with lighting compliance forms.

Building Additions

Refer to Section C502.2.6 for additional requirements.

Compliance Method	Interior lighting	Exterior lighting
Lighting systems in addition area comply with all applicable provisions as a stand alone new construction project	■	■
Lighting systems in addition are combined with existing building lighting systems to demonstrate compliance	■	■

Addition is combined with existing:
*For **interior** lighting projects, include new + existing interior lighting fixture wattage in Proposed Lighting Wattage table in LTG-INT-BLD or LTG-INT-SPACE form.*
*For **exterior** lighting projects, include new + existing exterior lighting fixture wattage in Proposed Tradable and Proposed Non-Tradable Lighting Wattage tables in LTG-EXT form.*

Interior and Exterior Lighting Alterations

Select all Lighting Power and Lighting Control elements that apply to the scope of the retrofit project. If project includes a combination of spaces where less than 50% of the existing fixtures are replaced in some spaces, and 50% or more of the fixtures are replaced in others, then provide separate lighting power compliance forms for the two retrofit conditions. Spaces undergoing the same type of retrofit may be combined into one lighting power compliance form.

Refer to Section C503.6 for additional requirements.

All alteration lighting controls shall be commissioned per C408.3.

■ ***No changes are being made to the interior or exterior lighting systems and existing space uses and configuration are not changed.***

Lighting Power	Interior lighting	Parking garage	Exterior lighting
50% or more of existing are replaced	■	■	■
Less than 50% of existing are replaced	■	■	■
Lamp and/or ballast replacement only – existing total wattage not increased	■	■	■

50% or more replaced *- Total lighting power of new + existing-to-remain fixtures shall comply with total LPA per Sections C405.4.2 and C405.5.2. Include new + existing-to-remain fixtures in Proposed Lighting Wattage table in LTG-INT-BLD, LTG-INT-SPACE or LTG-EXT form.*

Less than 50% replaced *- Total lighting power of new + existing-to-remain fixtures shall not exceed the total lighting power prior to alteration. Include new + existing-to-remain fixtures in the Proposed Lighting Wattage table in LTG-INT-BLD, LTG-INT-SPACE or LTG-EXT form.*

50% threshold *applies to number of luminaires for interior spaces and parking garages, and total installed wattage for exterior luminaires.*

Lighting Controls	Interior lighting	Parking garage	Exterior lighting
New wiring installed to serve added fixtures and/or fixtures relocated to new circuit(s)	■	■	■
New or moved lighting	■	■	■
Interior space is reconfigured - luminaires unchanged or relocated	■		

New wiring or circuit *- For interior lighting, provide required manual controls per C405.2.3, occupancy sensor controls per C405.2.1, daylight responsive controls per C405.2.4 and application specific lighting controls per C405.2.5. For exterior lighting, provide required controls per C405.2.7.*

New or moved panel *- Provide all applicable lighting controls as noted for New Wiring and automatic time switch controls per C405.2.2.*

Reconfigured interior space *- Provide all required lighting controls that apply to a new interior space. Application specific lighting control provisions per C405.2.5 do not apply to reconfigured*

Change of Space Use

■ Existing interior lighting systems in areas under-going a change in space use are upgraded to comply with LPAs for the new space types per Tables C405.4.2(1) or C405.4.2(2).

Identify interior spaces requiring LPD upgrade to the current Code in Proposed Lighting Wattage table in LTG-INT-BLD or LTG-INT-SPACE form.

Lighting Summary, cont. — LGT-SUM

2015 Washington State Energy Code Compliance Forms for Commercial Buildings including R2, R3, R4 over 3 stories and all R1 — Revised August 2016

Project Title: KIRKLAND FS 24 — Date 5/29/2020

Interior Lighting System Description

Interior Lighting Power Allowance Method

■ Building Area Method ■ Space-by-space Method

Select method used in project.

Interior Lighting Controls

■ All C405.2.1 - C405.2.8 Controls ■ C405.2 Exception 5 Luminaire Level Lighting Control (LLLC)

■ Additional Efficiency Package Option C406.4 Enhanced digital lighting controls

To comply with C406.4, no less than 90% of the total installed interior lighting power shall comply with required controls per C406.4.

Dwelling Unit Interior Lighting

Permanently installed interior lighting fixtures in dwelling units comply with: ●

● C405.2 thru C405.5 Commercial Lighting Controls and LPA

● C406.3 High Efficacy Lighting

●

Exterior Lighting System Description

Interior Lighting - Space-By-Space Method — LTG-INT-SPACE

2015 Washington State Energy Code Compliance Forms for Commercial Buildings including R2, R3, R4 over 3 stories and all R1 — Revised August 2016

Project Title: KIRKLAND FS 24 — Date 5/29/2020

Calculation Area NOTE 9

● ■ Addition - stand alone ● ■ Addition + existing

● ■ Spaces where < 50% of luminaires are replaced ● ■ Spaces where ≥ 50% of luminaires are replaced

For Building Department Use

LPA Calculation Type

● Standard ■ Additional Efficiency Package Option C406.3 Reduced Interior Lighting ●

To comply with C406.3, the Proposed LPD shall be 25% lower than the Target LPA. Refer to C406.3 for additional requirements.

Maximum Allowed Lighting Wattage NOTE 1

Location (plan #, room #)	Space Type	Ceiling Height NOTE 2	Gross Interior Area in ft²	Allowed Watts per ft²	Watts Allowed (watts/ft² x area)
	Fire stations: Sleeping quarters		656	0.180	118
	Fire stations: Engine rooms	24	4209	0.486	2046
	Corridor: all other		1834	0.530	972
	Conference/meeting/multipurpose		444	0.980	435
	Dining area: all other		615	0.520	320
	Lobby: all other		299	0.720	215
	Office: Enclosed		147	0.890	131
	Storage room		165	0.500	83
	Electrical/mechanical		7801	0.760	5929
	Gymnasium/fitness center: Exercise area		595	0.580	345
	Restroom: all other		579	0.780	452
		Total Area:	17344	Retail Display Allowance from LTG-INT-DISPLAY	
	Lobby Art/Exhibit Display Allowance from LTG-INT-DISPLAY NOTE 8			Allowed Watts	11045

Proposed Lighting Wattage NOTE 3

Location (plan #, room #)	Fixture Description NOTE 4, 5, 6	Number of Fixtures	Watts/ Fixture NOTE 7	Watts Proposed
	F1-RECESSED 2x2 LED	51	29	1479
	F2-LINEAR LED 4'	29	26	754
	F3-WALL MOUNTED 2' LED	9	12	108
	F4-RECESSED RD DNLT LED	16	10	160
	F5-PENDANT MTD LINEAR LED	12	42	504
	F6-CHAIN MTD 8' LED	36	76	2736
	F7-WALL MTD 3' LINEAR LED	8	13	104
	F8-SURFACE MTD LINEAR LED	7	16	112
	F9-PENDANT MTD LED MONO POINT	6	8	48
	F10-UNDER CABIENT LIGHT LED	24	6	144
	F10A-EXHIBIT CABINET LIGHT	1	60	60
	F11-NOT USED			
	F12-PENDANT MTD LINEAR LED	10	16	160
	F14-PENDANT MTD LINEAR LED	10	42	420
			Proposed Retail Display Lighting from LTG-INT-DISPLAY	
	Total Proposed Watts may not exceed Total Allowed Watts for Interior Lighting		Total Proposed Watts	6789

Interior Lighting Power Allowance — **COMPLIES**

Note 1 - List all unique space types per Table C405.4.2(2) that occur in the project scope. Select space type category per from drop down menu.
Note 2 - Indicate ceiling height for atriums and spaces utilizing the ceiling height adjustment per Table C405.4.2(2). Footnotes d thru f.
Note 3 - List all proposed lighting fixtures including exempt lighting equipment and existing-to-remain fixtures.
Note 4 - For proposed Fixture Description, indicate fixture type, lamp type (e.g. T-8), number of lamps in the fixture, and ballast type (if included). For track lighting, list the length of the track (in feet) in addition to the fixture, lamp, and ballast information.
Note 5 - For lighting equipment eligible for exemption per C405.4.1, note exception number and leave Watts/Fixture blank.
Note 6 - Existing-to-remain fixtures shall be included in the Proposed Lighting Wattage table in the same manner as new fixtures. Identify as existing in fixture description.
Note 7 - For proposed Watts/Fixture enter the luminaire wattage for installed lamp and ballast using manufacturer or other approved source. For luminaires with screw-in lamps, enter the manufacturer's listed maximum input wattage of the fixture (not the lamp wattage). For low voltage lighting, enter the wattage of the transformer. For line voltage track/busway systems, enter the larger of the attached luminaire wattage or 50 watts/lineal foot, or enter the wattage limit of permanent current limiting device.
Note 8 - Lobby Art/Exhibit Display Allowance is independent of the Maximum Allowed Lighting Wattage.
Note 9 - Calculation Area Details:
a. Lighting fixtures in a building addition may comply as a stand alone project, or they may be combined with the overall existing building lighting systems to demonstrate compliance. Refer to C502.1.

Exterior Lighting — LTG-EXT

2015 Washington State Energy Code Compliance Forms for Commercial Buildings including R2, R3, R4 over 3 stories and all R1 — Revised August 2016

Project Title: KIRKLAND FS 24 — Date 5/29/2020

Exterior Lighting Zone *Table C405.5.2(1) Specified by jurisdiction.*

● Zone 1 ● Zone 2 ● Zone 3 ● Zone 4

Zone selection required to enable LTG-EXT form

For Building Department Use

Calculation Area

● ● Addition - stand alone ● Addition + existing

● Alteration with < 50% ext. wattage replaced ● Alteration with ≥ 50% ext. wattage replaced

Building Grounds

Applies to luminaires > 100 Watts

■ Efficacy > 80 lumens/watt ■ Exemption _____

■ Controlled by motion sensor

Tradable Maximum Allowed Lighting Wattage NOTE 1 — Base Site Allowance: 600

Tradable Surfaces	Surface Description	Area (ft²), perimeter (lf), or # of items	Allowed Watts per ft² or per lf	Allowed Watts x ft² (or x lf)
Uncovered Parking and drives		29430	0.06 W/ft2	1766

Total Allowed Tradable + Site Allowance Watts: 2366

Tradable Proposed Lighting Wattage NOTE 2

Tradable Surface	Fixture Description NOTE 3, 4	Number of Fixtures	Watts per Fixture NOTE 5	Watts Proposed
Uncovered Parking and drives	FE1-SITE POLE LIGHT LED	2	65	130
Uncovered Parking and drives	FE2-SITE POLE LIGHT LED	6	65	390

Total proposed tradable watts may not exceed the sum of total allowed tradable watts plus the base site allowance. Any base site allowance not needed to make tradable watts comply can be applied to individual non-tradable

Total Proposed Tradable Watts: 520

Non-Tradable Maximum Allowed Lighting Wattage NOTE 1 — Site Allowance Remaining: 600

Non-Tradable Surfaces	Surface Description	Area (ft²), perimeter (lf), or # of items	Allowed Watts per ft² or per lf	Allowed Watts x ft² (or x lf)
Bldg. Façade		634	0.1 W/ft2	64

Non-Tradable Proposed Lighting Wattage NOTE 2

Non-Tradable Surface	Fixture Description NOTE 3, 4	Number of Fixtures	Watts per Fixture NOTE 5	Watts Proposed
Bldg. Façade	FE3-WALL MTD LED	5	14	70
Bldg. Façade	FE4-NOT USED			
Bldg. Façade	FE5-WALL MTD LED	3	39	117
Bldg. Façade	FE6-NOT USED			
Bldg. Façade	FE7-RECESSED LINEAR LED	9	16	144
Bldg. Façade	FE8-SURFACE MTD LINEAR LED	3	32	96

Non-tradable proposed watts may not exceed allowed watts for any individual surface unless the total excess watts for all non-tradable surfaces are less than the remaining site allowance.

Non-Tradable Watts Exceeding LPA: 363

Remaining Site Allowance: 237

Exterior Lighting — **COMPLIES WITH MAX. ALLOWANCE**

Note 1 *- List all unique exterior surfaces per Table C405.5.2(2) that occur in the project scope. Select exterior surface categories from drop down menu.*
Note 2 *- List all proposed lighting fixtures including existing-to-remain fixtures.*
Note 3 *- For proposed Fixture Description, indicate fixture type, lamp type, number of lamps in the fixture, and ballast type (if applicable).*
Note 4 *- Existing-to-remain fixtures shall be included in the Tradable and Non-Tradable Proposed Lighting Wattage tables in the same manner as new fixtures. Identify as existing in fixture description.*
Note 5 *- For proposed Watts/Fixture enter the luminaire wattage for installed lamp and ballast using manufacturer or other approved source. For luminaires with screw-in lamps, enter the manufacturer's listed maximum input wattage of the fixture (not the lamp wattage). For low*

TCA
ARCHITECTURE □ PLANNING □ DESIGN
6211 ROOSEVELT WAY NORTHEAST
SEATTLE, WA 98115
tel: (206) 522-3830
fax: (206) 522-2456

CASE ENGINEERING
ELECTRICAL | LIGHTING | TELECOM | SECURITY
19515 North Creek Parkway, Suite 302
Bothell, WA 98011
425-402-9400 office@caseeng.com
17330

MICHAEL S CASE — STATE OF WASHINGTON — 07/21/2020 — 33273 — REGISTERED PROFESSIONAL ENGINEER

BID SET

No.	Description	Date:

Project Title:

FIRE STATION 24

City of Kirkland
Kirkland, Washington

Sheet Title:

ENERGY FORMS

Scale: NOTED
Project No. : 16-46
Date : July 21, 2020

Sheet Number :

E0.5

Provided to Builders Exchange of WA, Inc. For usage Conditions Agreement see www.bxwa.com - Always Verify Scal

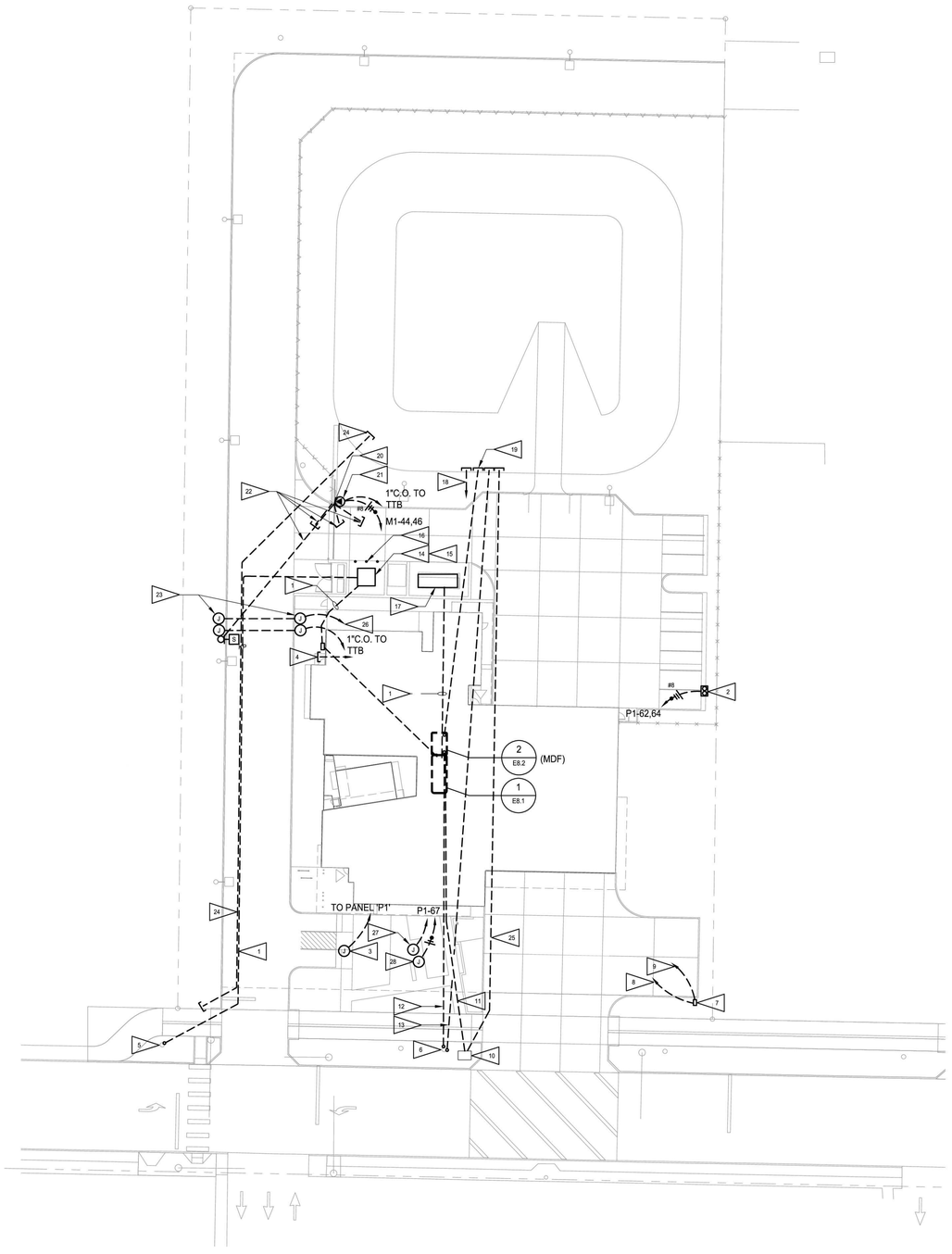

N 1 E1.1 ELECTRICAL SITE PLAN
SCALE: 1" = 30'-0"

GENERAL NOTES

1. PROVIDE ALL CONDUIT, BOXES AND WIRE AS REQUIRED BY NEC, WAC AND SPECIFICATONS FOR A FULLY FUNCTIONING SYSTEM.
2. CONTACT PUGET SOUND ENERGY SERVICE REPRESENTATIVE FREMONT AGUINALDO (425.233.0936) WHEN VAULT, CONDUITS AND SERVICE ARE READY FOR INSPECTION.
3. PUGET SOUND ENERGY ELECTRICAL SERVICE HANDBOOK FOR COMMERCIAL/INDUSTRIAL AND MULTIFAMILY PROJECTS IS LOCATED AT WWW.PSE.COM. COMPLY WITH ALL STANDARDS. PROVIDE ALL REQUIREMENTS.
4. CONTRACTOR SHALL DIG PRIMARY TRENCH AND VAULT HOLE PER PSE REQUIREMENTS. COORDINATE ALL REQUIREMENTS WITH PSE SERVICE REPRESENTATIVE AND PSE ELECTRICAL SERVICE HANDBOOK AND PROVIDE.
5. CONTRACTOR SHALL BACKFILL AND COMPACT TRENCHES AND VAULT HOLE PER CONTRACT AND PSE REQUIREMENTS AFTER INSPECTION AND APPROVAL BY PSE.
6. COORDINATE PLACEMENT OF ALL MAINTENANCE HOLES/ HAND HOLES WITH CIVIL AND LANDSCAPING CONTRACTORS PRIOR TO ANY SITE WORK. CONFLICTS SHALL BE BROUGHT TO ARCHITECT FOR RESOLUTION PRIOR TO COMMENCEMENT OF SITE WORK.
7. INSTALLATION OF CONDUITS AND UTILITY VAULTS SHALL INCLUDE BUT NOT LIMITED TO TRENCHING, BACKFILL, TAMPING OF EARTH, TRACER WIRE AND CONCRETE ENCASEMENT. THE SLOPE OF THE DUCT BANK GRADE SHALL BE 4 INCHES PER 100 FEET MINIMUM TOWARD THE UTILITY VAULT.
8. CONDUITS SHALL BE ENCASED WITH CONCRETE RATED AT 3000 PSI WHERE PASSING UNDER BUILDING FOUNDATIONS AND AT STREET/ PARKING LOT CROSSINGS. ENCASEMENT SHALL BE A MINIMUM 3" COVER ON ALL SIDES AND EXTEND 60" ON EACH SIDE OF CROSSING.
9. CONDUITS/ DUCT BANKS SHALL HAVE A #12 AWG SOLID CONDUCTOR TRACER WIRE WITH GREEN JACKET ROUTED ALONG THE ENTIRE LENGTH OF THE CONDUIT/DUCT BANK DIRECTLY ABOVE THE UPPER MOST CONDUIT. TRACER WIRE SHALL BE CONNECTED TO UTILITY VAULT GROUND. CONDUITS ENTERING A BUILDING SHALL BE PVC COATED RSC WITH GROUNDING BUSHINGS AND BE BONDED AT THE POINT OF ENTRY TO THE GROUNDING BUSBAR WITH A #6 AWG STRANDED GROUND WIRE.
10. SWABBING OF EACH CONDUIT WITH A MANDREL SHALL BE PROVIDED TO REMOVE ALL DEBRIS AND TO ENSURE THE INTEGRITY OF EACH CONDUIT. THE MANDREL SHALL BE 12" LONG AND SIZED APPROPRIATELY FOR EACH CONDUIT. CAP CONDUITS INSIDE EACH MAINTENANCE HOLES/ HAND HOLES AND TELECOMMUNICATIONS ROOM DIRECTLY AFTER SWABBING IS COMPLETE.
11. POLYESTER MULE TAPE WITH FOOT MARKINGS SHALL BE PROVIDED IN ALL CONDUITS, SECURE AT EACH END OF EACH CONDUIT/ UTILITY VAULT. MULE TAPE SHALL HAVE A MINIMUM TENSILE STRENGTH OF 1250 LBS FOR CONDUITS 2" OR LESS AND 2500 LBS FOR CONDUITS GREATER THAN 2".
12. CONTACT JOE FORDON W/ COMCAST 425.263.5348 TO COORDINATE CATV SERVICE ENTRANCE CABLING. ORDERING OF SERVICE BY OWNER.
13. CONTACT JAY SCHWAB W/ ZIPLY FIBER 425.263.4019 TO COORDINATE PHONE SERVICE ENTRANCE CABLING. ORDERING OF SERVICE BY OWNER.

FLAG NOTES

1. SEE ONE LINE DIAGRAM SHEET E9.1 FOR ADDITIONAL INFORMATION.
2. DUAL ELECTRIC CAR CHARGER LOCATION.
3. FUTURE ELECTRIC CAR CHARGER LOCATION.
4. PROVIDE 2" PVC STUBBED FROM LANDSCAPING AREA TO IRRIGATION CONTROLLER IN ROOM 133. PROVIDE PULL STRING IN CONDUIT. WIRE FOR IRRIGATION SYSTEM SHALL BE PROVIDED BY LANDSCAPING CONTRACTOR.
5. PUGET SOUND ENERGY (PSE) ELECTRICAL SERVICE POLE. COORDINATE ALL REQUIREMENTS WITH PSE AND PROVIDE.
6. EXISTING UTILITY POLE WITH TELEPHONE AND CABLE TV SERVICE. SEE FLAG NOTE 11.
7. FUTURE READERBOARD LOCATION. PROVIDE (2) TYPE 1 12"X12"X24"D HANDHOLES FOR POWER AND TELECOM.
8. PROVIDE (1) 2" SCHEDULE-40 PVC CONDUITS WITH MULE/ MARKER TAPE TO THE MDF AT 36" BELOW GRADE.
9. PROVIDE 3/4" PVC, WITH PULLSTRING, TO PANEL 'P1' IN ROOM 113.
10. TELECOMMUNICATIONS VAULT FOR OWNER WAN OPTICAL FIBER PROVIDED BY CIVIL CONTRACTOR. SEE SHEET C8.0 FOR ADDITIONAL INFORMATION.
11. PROVIDE (2) 4" SCHEDULE-40 PVC CONDUITS WITH (3) 1" HDPE INNERDUCTS AND MULE/ MARKER TAPE IN EACH INNERDUCT TO THE MDF AT 36" BELOW GRADE.
12. PROVIDE (3) 4" SCHEDULE-40 PVC CONDUITS WITH MULE/ MARKER TAPE TO THE MDF AT 36" BELOW GRADE. PROVIDE 10'-0" GALVANIZED RIGID CONDUIT RISER UP UTILITY POLE WITH STAND-OFF BRACKETS AND CAP.
    (2) 4"C ZIPLY (FRONTIER) SERVICE ENTRANCE
    (1) 4"C CATV (COMCAST) SERVICE ENTRANCE
13. PROVIDE (3) 4" SCHEDULE-40 PVC CONDUITS WITH MULE/ MARKER TAPE AT 36" BELOW GRADE, TO CLEAR OF NEW IMPERVIOUS SURFACE FOR FUTURE TRAINING BUILDING. CAP END OF CONDUIT AND PROVIDE (2) CONCRETE MARKERS, 12"X12"X6" THICK, TOP FLUSH WITH FINISHED GRADE. LABEL MARKERS 'TELEPHONE' AND 'CATV'. PROVIDE 10'-0" GALVANIZED RIGID CONDUIT RISER UP UTILITY POLE WITH STAND-OFF BRACKETS AND CAP.
    (2) 4"C ZIPLY (FRONTIER) SERVICE ENTRANCE
    (1) 4"C CATV (COMCAST) SERVICE ENTRANCE
14. PSE UTILITY TRANSFORMER ON VAULT/VAULT LID.
15. PSE SHALL PROVIDE TRANSFORMER VAULT/VAULT LID. CONTRACTOR SHALL DIG VAULT HOLE. COORDINATE EXACT LOCATION AND SIZE WITH PSE PRIOR TO DIGGING. BED VAULT AND BACKFILL PER PSE REQUIREMENTS.
16. PROVIDE GUARD POSTS FOR TRANSFORMER PER PSE REQUIREMENTS. SEE PSE ELECTRIC SERVICE HANDBOOK FOR EXACT REQUIREMENTS AND PROVIDE.
17. PROVIDE DIESEL GENERATOR WITH SKID BASED FUEL TANK AND SOUND ATTENUATED WEATHERPROOF ENCLOSURE. PROVIDE CONCRETE HOUSEKEEPING PAD FOR GENERATOR. COORDINATE REQUIREMENTS FOR CONCRETE HOUSEKEEPING PAD WITH STRUCTURAL ENGINEER PRIOR TO CONSTRUCTING. SEE ONE LINE DIAGRAM SHEET E9.1 FOR ADDITIONAL INFORMATION.
18. PROVIDE (1) 4" PVC WITH PULLSTRING FROM MDP STUBBED TO CLEAR OF NEW IMPERVIOUS SURFACE FOR POWER TO FUTURE TRAINING BUILDING. CAP AND MARK END OF STUB WITH CONCRETE MARKER 12"X12" X6" THICK, TOP FLUSH WITH FINISHED GRADE. LABEL MARKER 'POWER'.
19. PROVIDE (3) 4" SCHEDULE-40 PVC CONDUITS WITH MULE/ MARKER TAPE AT 36" BELOW GRADE, TO CLEAR OF NEW IMPERVIOUS SURFACE FOR FUTURE TRAINING BUILDING FROM MDF. CAP ENDS OF CONDUITS AND PROVIDE CONCRETE MARKER, 12"X12"X6" THICK, TOP FLUSH WITH FINISHED GRADE. LABEL MARKER 'TELECOMMUNICATIONS'.
20. GATE OPERATOR CONTROL PANEL. PROVIDE 1"C. FROM GATE CONTROL PANEL TO CLICK-2-ENTER RECEIVER MOUNTED ON POST. COORDINATE EXACT LOCATION OF CLICK-2-ENTER RECEIVER AND MAKE ADJUSTMENTS AS REQUIRED.
21. GATE OPERATOR.
22. STUB 1" CONDUIT WITH PULLSTRING OUT FOR LOOP DETECTOR WIRING. COORDINATE EXACT LOCATION AND REQUIREMENTS WITH GATE SUPPLIER.
23. FUTURE MOTORIZED GATE LOCATION.
24. PROVIDE (1) 4" SCHEDULE-40 PVC CONDUIT PER PSE SPECIFICATIONS FOR FUTURE SERVICE TO TRAINING FACILITY. STUB FROM JUST INSIDE PROPERTY LINE TO CLEAR OF NEW IMPERVIOUS SURFACE AT FUTURE TRAINING BUILDING. CAP AND MARK ENDS OF STUB WITH CONCRETE MARKER 12"X12" X6" THICK, TOP FLUSH WITH FINISHED GRADE. LABEL MARKER 'FUTURE PSE PRIMARY POWER'.
25. PROVIDE (2) 4" SCHEDULE-40 PVC CONDUITS WITH (3) 1" HDPE INNERDUCTS AND MULE/ MARKER TAPE IN EACH INNERDUCT TO THE MDF AT 36" BELOW GRADE. CAP END OF CONDUIT AND PROVIDE CONCRETE MARKER, 12"X12"X6" THICK, TOP FLUSH WITH FINISHED GRADE. LABEL MARKER 'OPTICAL FIBER'. CONDUITS SHALL SLOPE AWAY FROM MDF ROOM.
26. PROVIDE 1"C, WITH PULLSTRING, TO PANEL 'M1'.
27. PROVIDE (1) 1" SCHEDULE-40 PVC CONDUIT WITH MULE/ MARKER TAPE TO THE MDF AT 36" BELOW GRADE.
28. PROVIDE 120V CIRCUIT TO ILLUMINATED ART. COORDINATE REQUIREMENTS WITH ARTIST AND PROVIDE FINAL CONNECTION.

TCA
ARCHITECTURE □ PLANNING □ DESIGN
6211 ROOSEVELT WAY NORTHEAST
SEATTLE, WA 98115
tel: □206□522-3830
□ax: □206□522-2456

CASE ENGINEERING
ELECTRICAL | LIGHTING | TELECOM | SECURITY
19515 North Creek Parkway, Suite 302
Bothell, WA 98011
425-402-9400 office@caseeng.com
17330

MICHAEL S CASE
STATE OF WASHINGTON
07/14/2020
33273
REGISTERED
PROFESSIONAL ENGINEER

BID SET

No.	Description	Date:

Project Title:

FIRE STATION 24
City of Kirkland
Kirkland, Washington

Sheet Title:

ELECTRICAL
SITE PLAN

Scale: NOTED
Project No. : 16-46
Date : July 21, 2020

Sheet Number :

E1.1

Provided to Builders Exchange of WA, Inc. For usage Conditions Agreement see www.bxwa.com - Always Verify Scal

GENERAL NOTES

1. CIRCUIT NUMBERS REFER TO PANEL P2 UNLESS OTHERWISE NOTED.
2. SEE POLE BASE DETAIL 2, SHEET E8.5 FOR LIGHT POLE BASE INFORMATION.

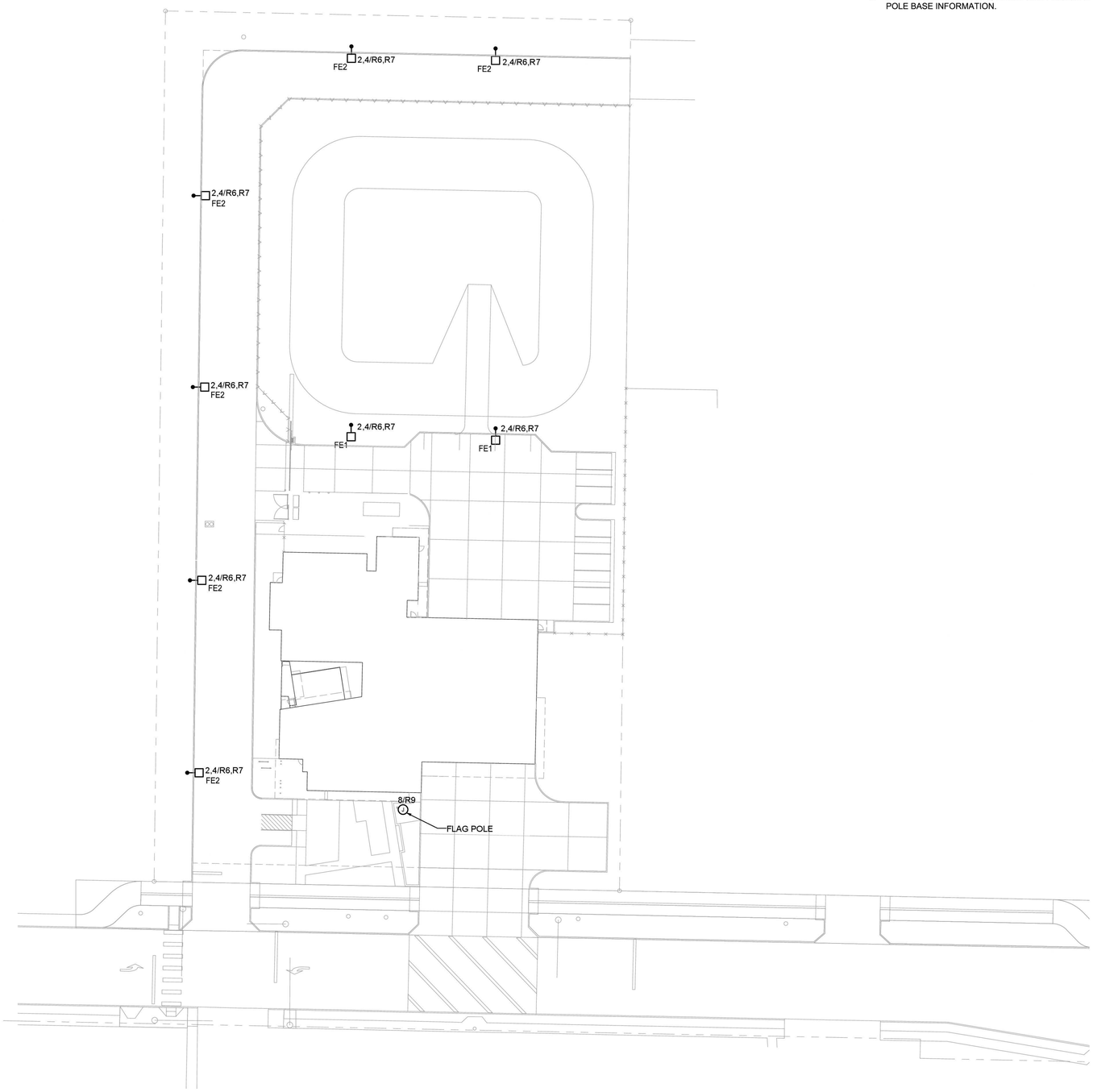

N 1 E1.2 ELECTRICAL SITE LIGHTING PLAN
SCALE: 1" = 30'0"

TCA
ARCHITECTURE □ PLANNING □ DESIGN
6211 ROOSEVELT WAY NORTHEAST
SEATTLE, WA 98115
tel: (206) 522-3830
fax: (206) 522-2456

CASE ENGINEERING
ELECTRICAL | LIGHTING | TELECOM | SECURITY
19515 North Creek Parkway, Suite 302
Bothell, WA 98011
425-402-9400 office@caseeng.com
17330

MICHAEL S CASE
STATE OF WASHINGTON
07/21/2020
33273
REGISTERED
PROFESSIONAL ENGINEER

BID SET

No.	Description	Date:

Project Title:

FIRE STATION 24
City of Kirkland
Kirkland, Washington

Sheet Title:

ELECTRICAL
SITE LIGHTING PLAN

Scale: NOTED
Project No. : 16-46
Date : July 21, 2020

Sheet Number :

E1.2

Provided to Builders Exchange of WA, Inc. For usage Conditions Agreement see www.bxwa.com - Always Verify Scal

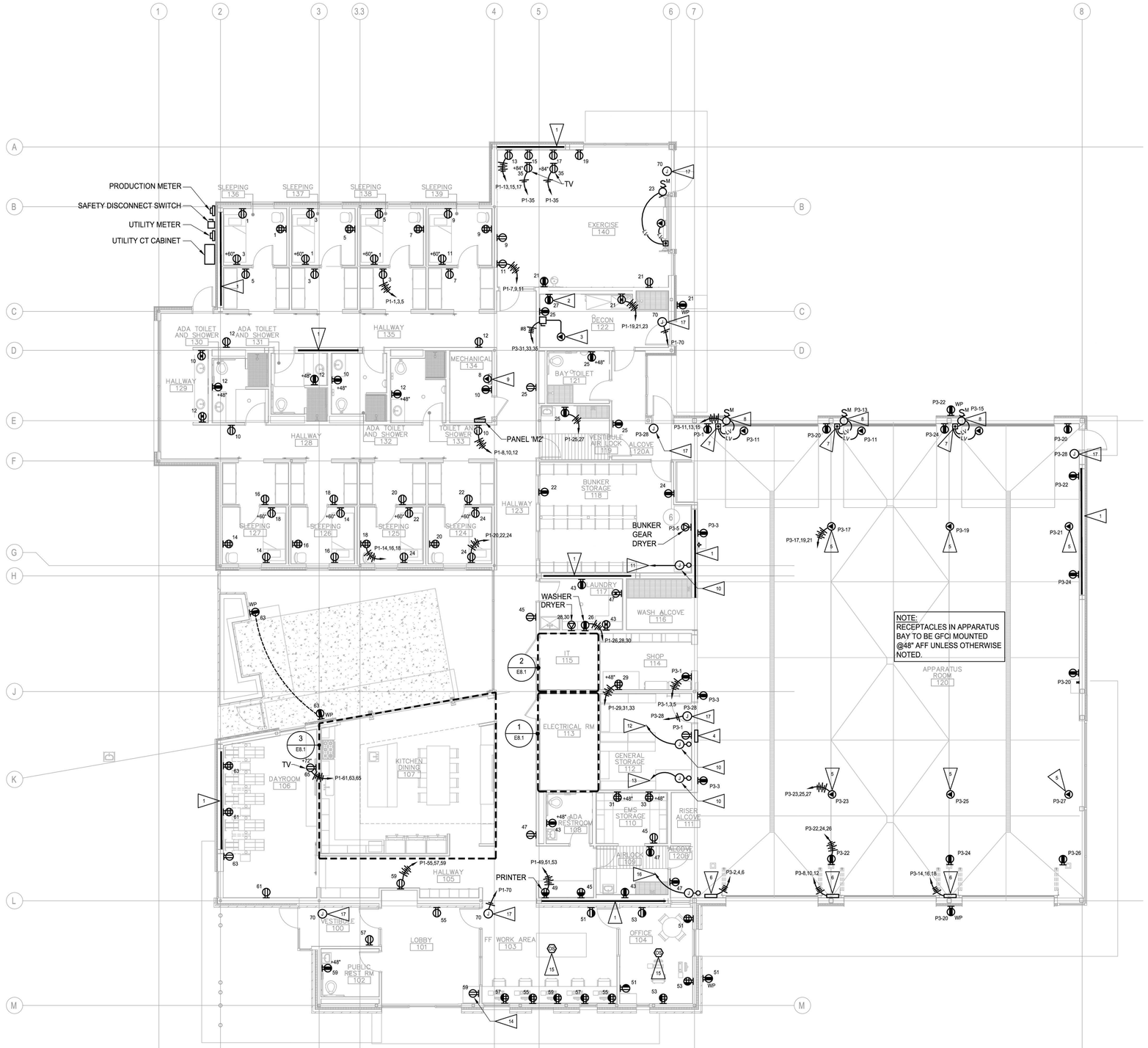

1ST FLOOR POWER FLOOR PLAN
SCALE: 1/8" = 1'0"

GENERAL NOTES

1. CIRCUIT NUMBERS SHOWN REFER TO PANEL P1 UNLESS OTHERWISE NOTED.
2. INSTALL ALL DEVICE BOXES PRIOR TO INSTALLATION OF CONDUIT. SCHEDULE WALK-THROUGH WITH ARCHITECT AND OWNER PRIOR TO INSTALLATION OF ANY CONDUIT.
3. COORDINATE ALL CEILING MOUNTED DEVICE LOCATIONS WITH ARCHITECTURAL CEILING PLANS. WHERE CONFLICT OCCURS, ARCHITECTURAL R.C.P. TAKES PRECEDENT EXCEPT WHEN LOCATION IS MODIFIED BY CODE AUTHORITY.
4. WALL MOUNTED DEVICES SHALL NOT BE MOUNTED BACK TO BACK UNLESS PHYSICAL SPACE NECESSITATES IT. IF THESE DEVICES MUST BE MOUNTED BACK TO BACK, PROVIDE SOUND INSULATION AT BOXES.
5. FOR BRANCH CIRCUITS THAT EXCEED 75' IN LENGTH, INCREASE WIRE BY ONE AWG SIZE.
6. PROVIDE DEDICATED NEUTRAL CONDUCTOR FOR ALL BRANCH CIRCUITS.
7. SEE ARCHITECTURAL ELEVATIONS FOR MOUNTING HEIGHTS OF ALL DEVICE LOCATIONS, UNLESS OTHERWISE NOTED. DEVICES IN KNEE SPACES ARE LOCATED BETWEEN THE COUNTERTOP AND CABLE TRAY. SEE ARCHITECTURAL CASEWORK ELEVATIONS AND DETAILS FOR EXACT MOUNTING HEIGHTS.
8. FOR ANY DEVICE MOUNTING LOCATION THAT CONFLICTS WITH A MIRROR, GENERAL CONTRACTOR SHALL COORDINATE DEVICE LOCATION WITH ARCHITECT PRIOR TO ROUGH IN.
9. PROVIDE ALL CONDUIT, BOXES AND WIRE AS REQUIRED BY WAC, NEC, AND SPECIFICATIONS SECTIONS 26 05 00, 26 05 11, 26 05 19, 26 05 32 AND 26 05 33 FOR A FULLY FUNCTIONING SYSTEM.

FLAG NOTES

1. BRACE FRAME LOCATION. STUB CONDUIT FROM ABOVE BRACE FRAME OR UP FROM BELOW SLAB AS REQUIRED. SEE STRUCTURAL SHEET S2.1 FOR ADDITIONAL INFORMATION.
2. WASHER/DRYER STACK.
3. WASHER EXTRACTOR.
4. GENERATOR ANNUNCIATOR PANEL. INSTALL BACKBOX AND PROVIDE CONDUIT AND PROPER WIRE/CABLE FOR GENERATOR ANNUNCIATOR FROM BACK BOX TO GENERATOR. (PROVIDE 5'-0" CABLE SERVICE LOOP IN BACKBOX.) VERIFY EXACT LOCATION WITH FIRE DISTRICT PRIOR TO ROUGH-IN.
5. PROVIDE CORD DROP WITH HUBBELL #HBL5369C RECEPTACLE AT 4'-0" AFF. PROVIDE TYPE SOOW 10-3 CABLE WITH 10' SERVICE LOOP AT CEILING FOR FUTURE FOR FLEXIBILITY OF USE. PROVIDE STRAIN RELIEF. PROVIDE 3'-0" EXTENSION CORD WITH HUBBELL #HBL5369C & #HBL5366C CONNECTORS ON EITHER END. PROVIDE ONE EXTENSION CORD AT EACH CORD DROP. SEE DETAIL 3, SHEET E8.5 FOR ADDITIONAL INFORMATION.
6. BI-FOLD DOOR CONTROL PANEL. SEE DETAILS 6 & 7, SHEET E8.5.
7. OVERHEAD DOOR PUSHBUTTON. COORDINATE EXACT REQUIREMENTS WITH VENDOR AND PROVIDE. COORDINATE EXACT LOCATION AND RECESSED/SURFACE CONFIGURATION WITH ARCHITECT PRIOR TO ROUGH-IN AND ORDERING. SEE ARCHITECTURAL INTERIOR ELEVATIONS, SHEETS A7.5 & A7.6.
8. WALL MOUNTED APPARATUS BAY DOOR OPERATOR. PROVIDE ALL RACEWAY & CONDUCTORS REQUIRED FOR COMPLETE OPERATION AS DESCRIBED IN ARCHITECTURAL SPECIFICATIONS. VERIFY MOTOR LOCATION PRIOR TO ROUGH-IN.
9. IRRIGATION CONTROLLER PROVIDED BY LANDSCAPE CONTRACTOR. SEE FLAG NOTE 4, SHEET E1.1 FOR ADDITIONAL INFORMATION.
10. PROVIDE 12"X12"X4" J-BOX FOR ANTENNA CABLE.
11. PROVIDE 2" C. TO IT ROOM 115 FOR AES RADIO ANTENNA CABLE. COORDINATE EXACT REQUIREMENTS WITH FIRE ALARM SYSTEM BIDDER DESIGNER PRIOR TO ROUGH-IN.
12. PROVIDE 2" C. TO IT ROOM 115 FOR DAS RADIO ANTENNA CABLE. COORDINATE EXACT REQUIREMENTS WITH SYSTEM PROVIDER PRIOR TO ROUGH-IN.
13. PROVIDE 2" C. TO ROOM 101 FOR HAM RADIO ANTENNA CABLE. COORDINATE EXACT LOCATION AND REQUIREMENTS WITH OWNER PRIOR TO ROUGH-IN.
14. HAM RADIO LOCATION. COORDINATE EXACT LOCATION WITH ARCHITECT.
15. PROVIDE PLUG LOAD POWER PACK CONNECTED TO LIGHTING CONTROL SYSTEM TO CONTROL HALF-SWITCHED RECEPTACLES WITH CEILING MOUNTED OCCUPANCY SENSOR.
16. PROVIDE 1" C. TO MECHANICAL ROOM 134 FOR IRRIGATION CONTROLLER SENSOR.
17. PROVIDE POWER TO DOOR HARDWARE POWER SUPPLY. COORDINATE REQUIREMENTS FOR DOOR HARDWARE WITH HARDWARE SUPPLIER AND SPECIFICATION 08 71 00. SEE DOOR HARDWARE GROUPS, SPECIFICATION 08 71 00 PARAGRAPH 3.2, SPECIFICATION 28 13 00, SHEET E5.1, AND DETAILS 4 & 5, SHEET E8.4 FOR ADDITIONAL INFORMATION.

TCA
ARCHITECTURE □ PLANNING □ DESIGN
6211 ROOSEVELT WAY NORTHEAST
SEATTLE, WA 98115
tel: (206)522-3830
fax: (206)522-2456

CASE ENGINEERING
ELECTRICAL | LIGHTING | TELECOM | SECURITY
19515 North Creek Parkway, Suite 302
Bothell, WA 98011
425-402-9400 office@caseeng.com
17330

MICHAEL S CASE
STATE OF WASHINGTON
07/21/2020
33273
REGISTERED
PROFESSIONAL ENGINEER

BID SET

No.	Description	Date:

Project Title:

FIRE STATION 24
City of Kirkland
Kirkland, Washington

Sheet Title:

1ST FLOOR POWER PLAN

Scale: NOTED
Project No. : 16-46
Date : July 21, 2020

Sheet Number :

E2.1

Provided to Builders Exchange of WA, Inc. For usage Conditions Agreement see www.bxwa.com - Always Verify Scal

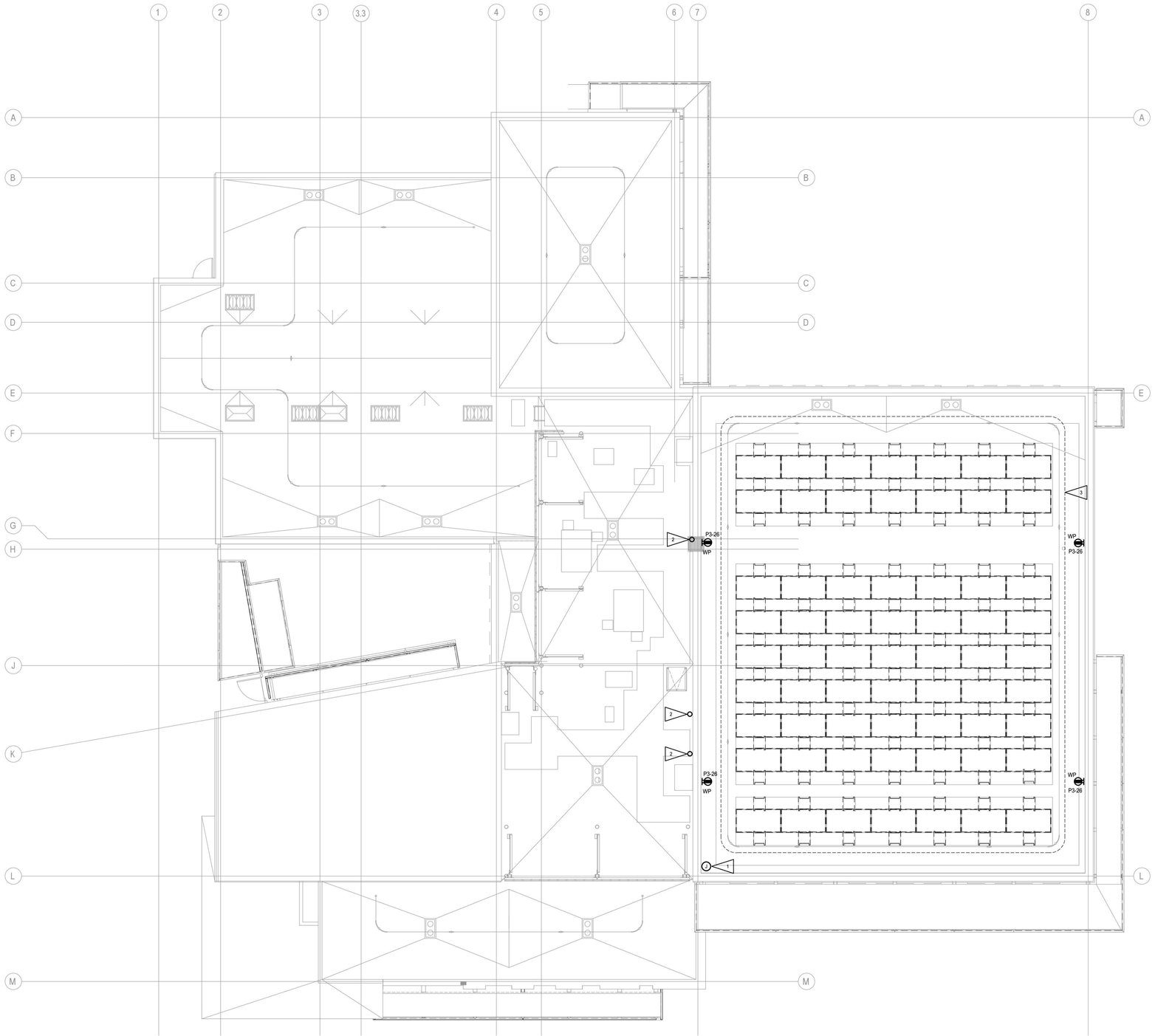

ROOF POWER PLAN
SCALE: 1/8" = 1'0"

GENERAL NOTES

1. INSTALL ALL DEVICE BOXES PRIOR TO INSTALLATION OF CONDUIT. SCHEDULE WALK-THROUGH WITH ARCHITECT AND OWNER PRIOR TO INSTALLATION OF ANY CONDUIT.
2. COORDINATE ALL CEILING MOUNTED DEVICE LOCATIONS WITH ARCHITECTURAL CEILING PLANS. WHERE CONFLICT OCCURS, ARCHITECTURAL R.C.P. TAKES PRECEDENT EXCEPT WHEN LOCATION IS MODIFIED BY CODE AUTHORITY.
3. FOR BRANCH CIRCUITS THAT EXCEED 75' IN LENGTH, INCREASE WIRE BY ONE AWG SIZE.
4. PROVIDE DEDICATED NEUTRAL CONDUCTOR FOR EACH BRANCH CIRCUIT.
5. HOMERUNS SHALL NOT BE COMBINED ON MECHANICAL EQUIPMENT.
6. PROVIDE ALL CONDUIT, BOXES AND WIRE AS REQUIRED BY WAC, NEC, AND SPECIFICATIONS SECTIONS 26 05 00, 26 05 11, 26 05 19, 26 05 32 AND 26 05 33 FOR A FULLY FUNCTIONING SYSTEM.

FLAG NOTES

1. IRRIGATION SENSOR. COORDINATE EXACT LOCATION WITH IRRIGATION CONTRACTOR PRIOR TO ROUGH-IN. PROVIDE ¾"C. FROM SENSOR TO CONTROLLER IN MECHANICAL ROOM 134.
2. ANTENNA LOCATIONS. PROVIDE 2" GRS CONDUIT SUPPORTED TO MECHANICAL WELL WALL FROM BELOW ROOF TO 2' ABOVE WALL. FASTEN TO MECHANICAL WELL WALL. WATERRPOOF ROOF PENETRATIONS.
3. FALL PROTECTION CABLE SHOWN FOR LOCATION COORDINATION. COORDINATE WITH GENERAL CONTRACTOR FOR EXACT LOCATION.

TCA
ARCHITECTURE □ PLANNING □ DESIGN
6211 ROOSEVELT WAY
NORTHEAST
SEATTLE, WA 98115
tel: □206□522-3830
□ax: □206□522-2456

CASE ENGINEERING
ELECTRICAL | LIGHTING | TELECOM | SECURITY
19515 North Creek Parkway, Suite 302
Bothell, WA 98011
425-402-9400 office@caseeng.com
17330

MICHAEL S CASE
STATE OF WASHINGTON
07/21/2020
33273
REGISTERED
PROFESSIONAL ENGINEER

BID SET

No.	Description	Date

Project Title:

FIRE STATION 24
City of Kirkland
Kirkland, Washington

Sheet Title:

ROOF POWER PLAN

Scale: NOTED
Project No. : 16-46
Date : July 21, 2020

Sheet Number :

E2.2

Provided to Builders Exchange of WA, Inc. For usage Conditions Agreement see www.bxwa.com - Always Verify Scal

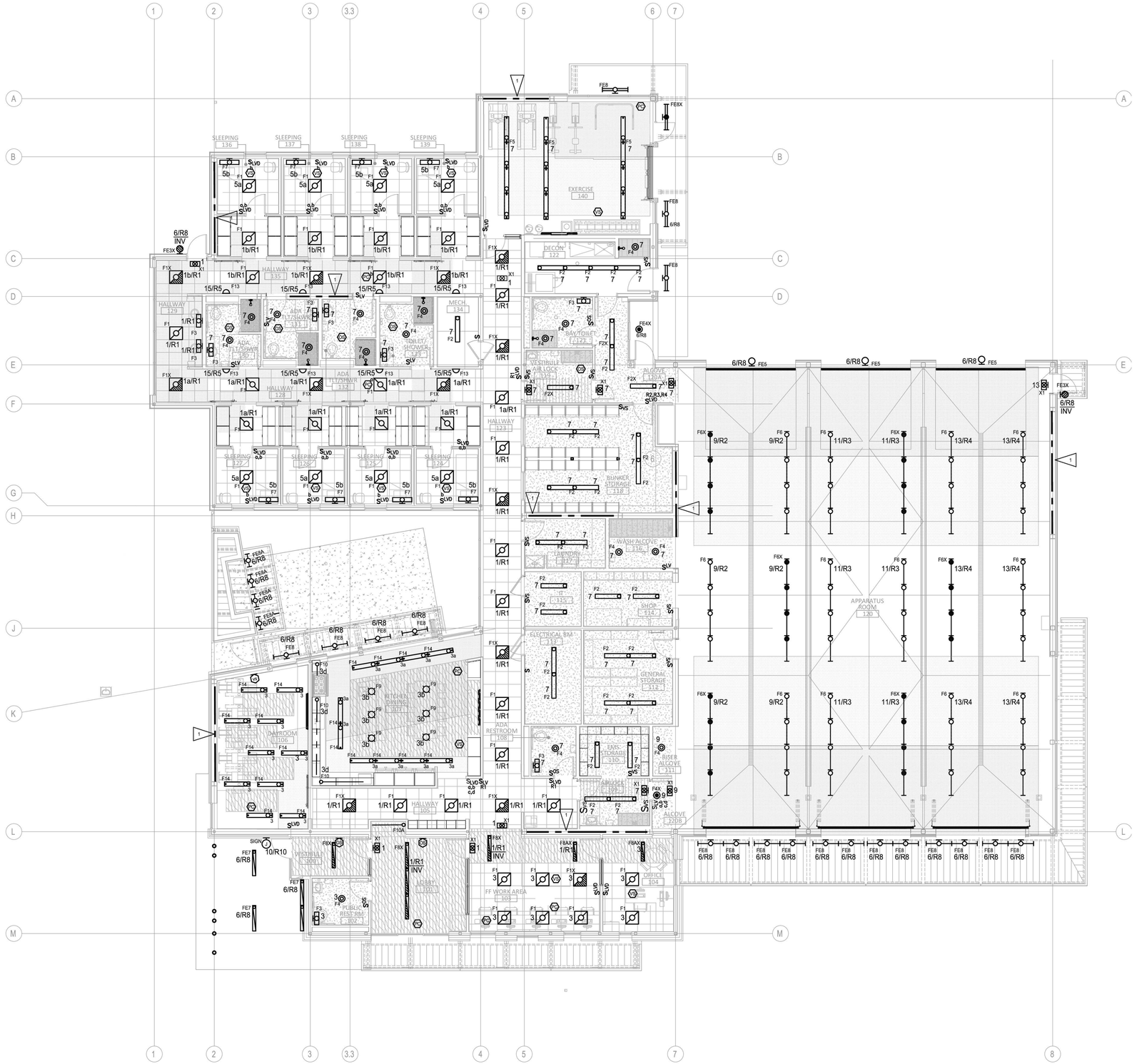

PRIMARY DAYLIGHT ZONE PER WASHINGTON STATE ENERGY CODE.

SECONDARY DAYLIGHT ZONE PER WASHINGTON STATE ENERGY CODE.

1ST FLOOR LIGHTING PLAN

SCALE: 1/8" = 1'0"

GENERAL NOTES

1. CIRCUIT NUMBERS SHOWN REFER TO PANEL P2 UNLESS NOTED OTHERWISE.
2. COORDINATE ALL CEILING MOUNTED DEVICE LOCATIONS WITH ARCHITECTURAL CEILING PLANS. WHERE CONFLICT OCCURS, ARCHITECTURAL R.C.P. TAKES PRECEDENT EXCEPT WHEN LOCATION IS MODIFIED BY CODE AUTHORITY.
3. FOR BRANCH CIRCUITS THAT EXCEED 75' IN LENGTH, INCREASE WIRE BY ONE AWG SIZE.
4. PROVIDE DEDICATED NEUTRAL CONDUCTOR FOR ALL PANEL BRANCH CIRCUITS.
5. PROVIDE ALL CONDUIT, BOXES AND WIRE AS REQUIRED BY WAC, NEC, AND SPECIFICATIONS SECTIONS 26 05 00, 26 05 11, 26 05 19, 26 05 32 AND 26 05 33 FOR A FULLY FUNCTIONING SYSTEM.

FLAG NOTES

1. BRACE FRAME LOCATION. STUB CONDUIT FROM ABOVE BRACE FRAME OR UP FROM BELOW SLAB AS REQUIRED. SEE STRUCTURAL SHEETS S2.1 FOR ADDITIONAL INFORMATION.

TCA
ARCHITECTURE □ PLANNING □ DESIGN
6211 ROOSEVELT WAY NORTHEAST
SEATTLE, WA 98115
tel: □206□522-3830
□ax: □206□522-2456

CASE ENGINEERING
ELECTRICAL | LIGHTING | TELECOM | SECURITY
19515 North Creek Parkway, Suite 302
Bothell, WA 98011
425-402-9400 office@caseeng.com
17330

MICHAEL S CASE
STATE OF WASHINGTON
07/21/2020
33273
REGISTERED
PROFESSIONAL ENGINEER

BID SET

No.	Descri□tion	Date:

Project Title:

FIRE STATION 24
City of Kirkland
Kirkland, Washington

Sheet Title:

1ST FLOOR LIGHTING PLAN

Scale: NOTED
Project No. : 16-46
Date : July 21, 2020

Sheet Number :

E3.1

Provided to Builders Exchange of WA, Inc. For usage Conditions Agreement see www.bxwa.com - Always Verify Scal

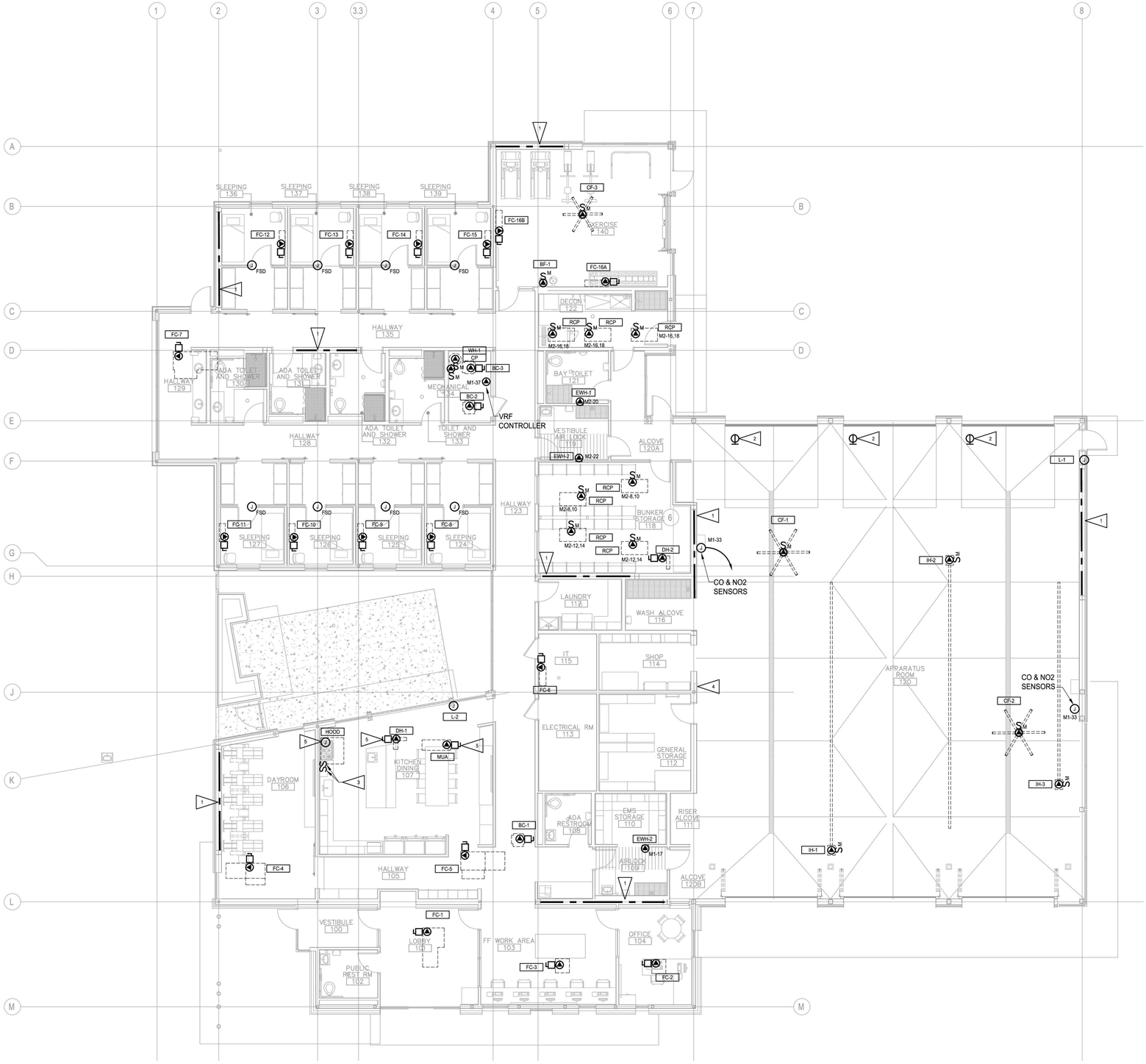

1ST FLOOR MECHANICAL POWER PLAN
SCALE: 1/8" = 1'0"

GENERAL NOTES

1. INSTALL ALL DEVICE BOXES PRIOR TO INSTALLATION OF CONDUIT. SCHEDULE WALK-THROUGH WITH ARCHITECT AND OWNER PRIOR TO INSTALLATION OF ANY CONDUIT.
2. COORDINATE ALL CEILING MOUNTED DEVICE LOCATIONS WITH ARCHITECTURAL CEILING PLANS. WHERE CONFLICT OCCURS, ARCHITECTURAL R.C.P. TAKES PRECEDENT EXCEPT WHEN LOCATION IS MODIFIED BY CODE AUTHORITY.
3. FOR BRANCH CIRCUITS THAT EXCEED 75' IN LENGTH, INCREASE WIRE BY ONE AWG SIZE.
4. PROVIDE DEDICATED NEUTRAL CONDUCTOR FOR EACH BRANCH CIRCUIT.
5. HOMERUNS SHALL NOT BE COMBINED ON MECHANICAL EQUIPMENT.
6. PROVIDE ALL CONDUIT, BOXES AND WIRE AS REQUIRED BY WAC, NEC, AND SPECIFICATIONS SECTIONS 26 05 00, 26 05 11, 26 05 19, 26 05 32 AND 26 05 33 FOR A FULLY FUNCTIONING SYSTEM.

FLAG NOTES

1. BRACE FRAME LOCATION. STUB CONDUIT FROM ABOVE BRACE FRAME OR UP FROM BELOW SLAB AS REQUIRED. SEE STRUCTURAL SHEETS S2.1 FOR ADDITIONAL INFORMATION.
2. POWER FOR NEDERMAN VEHICLE SOURCE CAPTURE EXHAUST RAIL MAGNET SYSTEM. SEE DETAIL 4, SHEET E8.5. COORDINATE WITH SYSTEM BIDDER DESIGNER FOR CONNECTION TYPE AND LOCATIONS.
3. SWITCHES FOR HOOD LIGHTS AND FAN. COORDINATE EXACT LOCATION WITH ARCHITECT PRIOR TO ROUGH-IN. PROVIDE CONDUIT, WIRE AND APPURTENANCES AS REQUIRED TO CONTROL HOOD LIGHTS AND FAN. COORDINATE WITH MECHANICAL CONTRACTOR FOR EQUIPMENT REQUIREMENTS AND WIRING DIAGRAMS.
4. NEDERMAN CONTROL PANEL. VERIFY EXACT LOCATION PRIOR TO ROUGH-IN WITH SYSTEM BIDDER/DESIGNER. SEE DETAIL 4, SHEET E8.5 FOR ADDITIONAL REQUIREMENTS.
5. KITCHEN HOOD, EXHAUST FAN KEF-1, MAKEUP AIR UNIT MAU, AND DUCT HEATER DH-1 SHALL BE INTERLOCKED. SEE DETAIL 5, SHEET E8.5 FOR ADDITIONAL INFORMATION.

TCA
ARCHITECTURE □ PLANNING □ DESIGN
6211 ROOSEVELT WAY NORTHEAST
SEATTLE, WA 98115
tel: (206) 522-3830
fax: (206) 522-2456

CASE ENGINEERING
ELECTRICAL | LIGHTING | TELECOM | SECURITY
19515 North Creek Parkway, Suite 302
Bothell, WA 98011
425-402-9400 office@caseeng.com
17330

MICHAEL S CASE
STATE OF WASHINGTON
07/21/2020
33273
REGISTERED
PROFESSIONAL ENGINEER

BID SET

No.	Description	Date:

Project Title:

FIRE STATION 24
City of Kirkland
Kirkland, Washington

Sheet Title:

1ST FLOOR MECHANICAL POWER PLAN

Scale: NOTED
Project No. : 16-46
Date : July 21, 2020

Sheet Number :

E4.1

Provided to Builders Exchange of WA, Inc. For usage Conditions Agreement see www.bxwa.com - Always Verify Scal

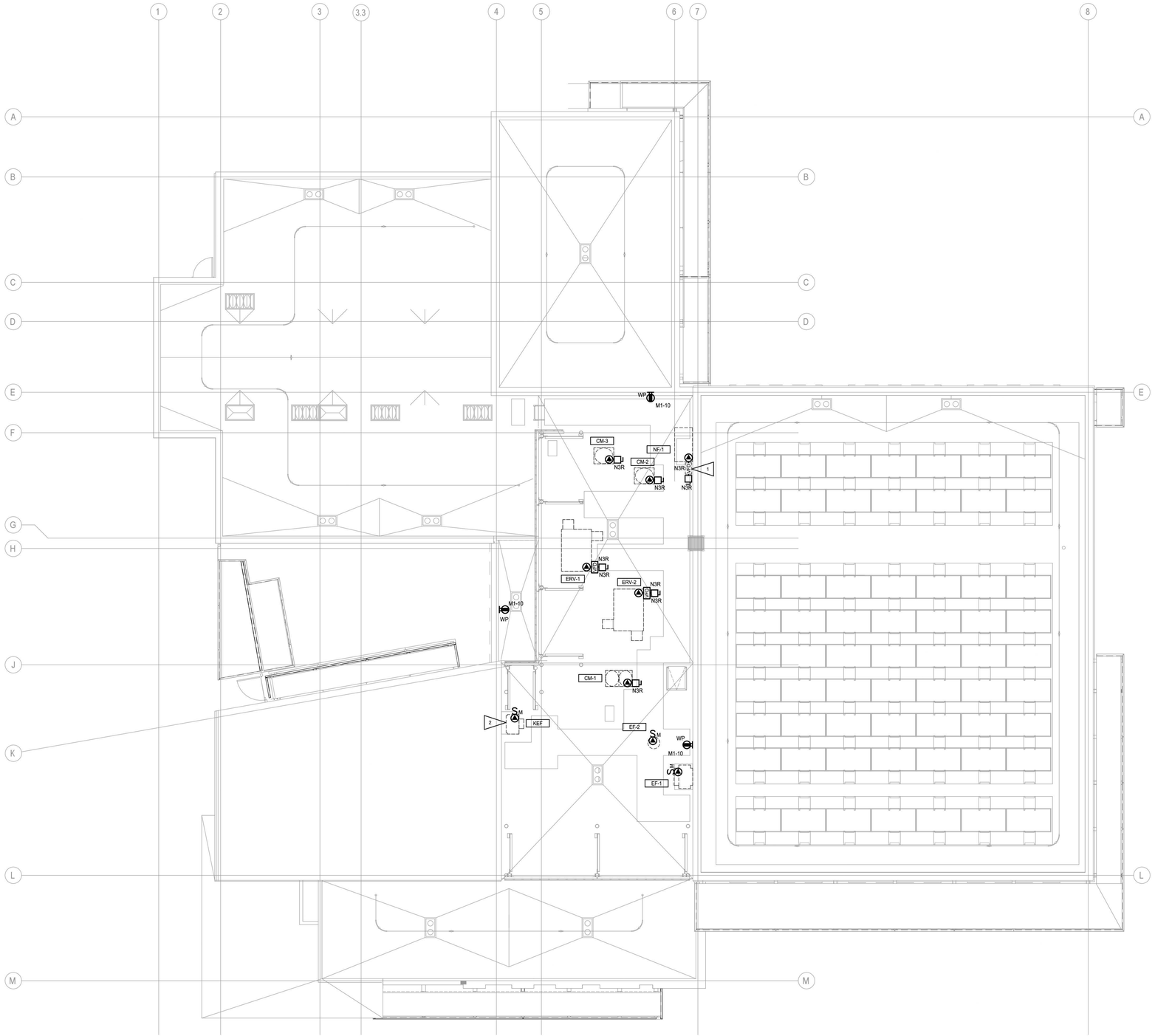

N 1 E4.2 ROOF MECHANICAL POWER PLAN

SCALE: 1/8" = 1'0"

GENERAL NOTES

1. INSTALL ALL DEVICE BOXES PRIOR TO INSTALLATION OF CONDUIT. SCHEDULE WALK-THROUGH WITH ARCHITECT AND OWNER PRIOR TO INSTALLATION OF ANY CONDUIT.
2. COORDINATE ALL CEILING MOUNTED DEVICE LOCATIONS WITH ARCHITECTURAL CEILING PLANS. WHERE CONFLICT OCCURS, ARCHITECTURAL R.C.P. TAKES PRECEDENT EXCEPT WHEN LOCATION IS MODIFIED BY CODE AUTHORITY.
3. FOR BRANCH CIRCUITS THAT EXCEED 75' IN LENGTH, INCREASE WIRE BY ONE AWG SIZE.
4. PROVIDE DEDICATED NEUTRAL CONDUCTOR FOR EACH BRANCH CIRCUIT.
5. HOMERUNS SHALL NOT BE COMBINED ON MECHANICAL EQUIPMENT.
6. PROVIDE ALL CONDUIT, BOXES AND WIRE AS REQUIRED BY WAC, NEC, AND SPECIFICATIONS SECTIONS 26 05 00, 26 05 11, 26 05 19, 26 05 32 AND 26 05 33 FOR A FULLY FUNCTIONING SYSTEM.

FLAG NOTES

1. NEDERMAN FAN VFD FURNISHED BY NEDERMAN SYSTEM VENDOR, INSTALLED BY DIV 26. COORDINATE EXACT LOCATION AND REQUIRMENTS WITH VENDOR PRIOR TO ROUGH-IN.
2. KITCHEN HOOD, EXHAUST FAN KEF-1, MAKEUP AIR UNIT MAU, AND DUCT HEATER DH-1 SHALL BE INTERLOCKED. SEE DETAIL 5, SHEET E8.5 FOR ADDITIONAL INFORMATION.

TCA
ARCHITECTURE □ PLANNING □ DESIGN
6211 ROOSEVELT WAY
NORTHEAST
SEATTLE, WA 98115
tel: □206□522-3830
□ax: □206□522-2456

CASE ENGINEERING
ELECTRICAL | LIGHTING | TELECOM | SECURITY
19515 North Creek Parkway, Suite 302
Bothell, WA 98011
425-402-9400 office@caseeng.com
17330

STATE OF WASHINGTON
MICHAEL S CASE
07/21/2020
33273
REGISTERED
PROFESSIONAL ENGINEER

BID SET

No.	Description	Date:

Project Title:

FIRE STATION 24

City of Kirkland
Kirkland, Washington

Sheet Title:

ROOF MECHANICAL
POWER PLAN

Scale: NOTED
Project No. : 16-46
Date : July 21, 2020

Sheet Number :

E4.2

Provided to Builders Exchange of WA, Inc. For usage Conditions Agreement see www.bxwa.com - Always Verify Scal

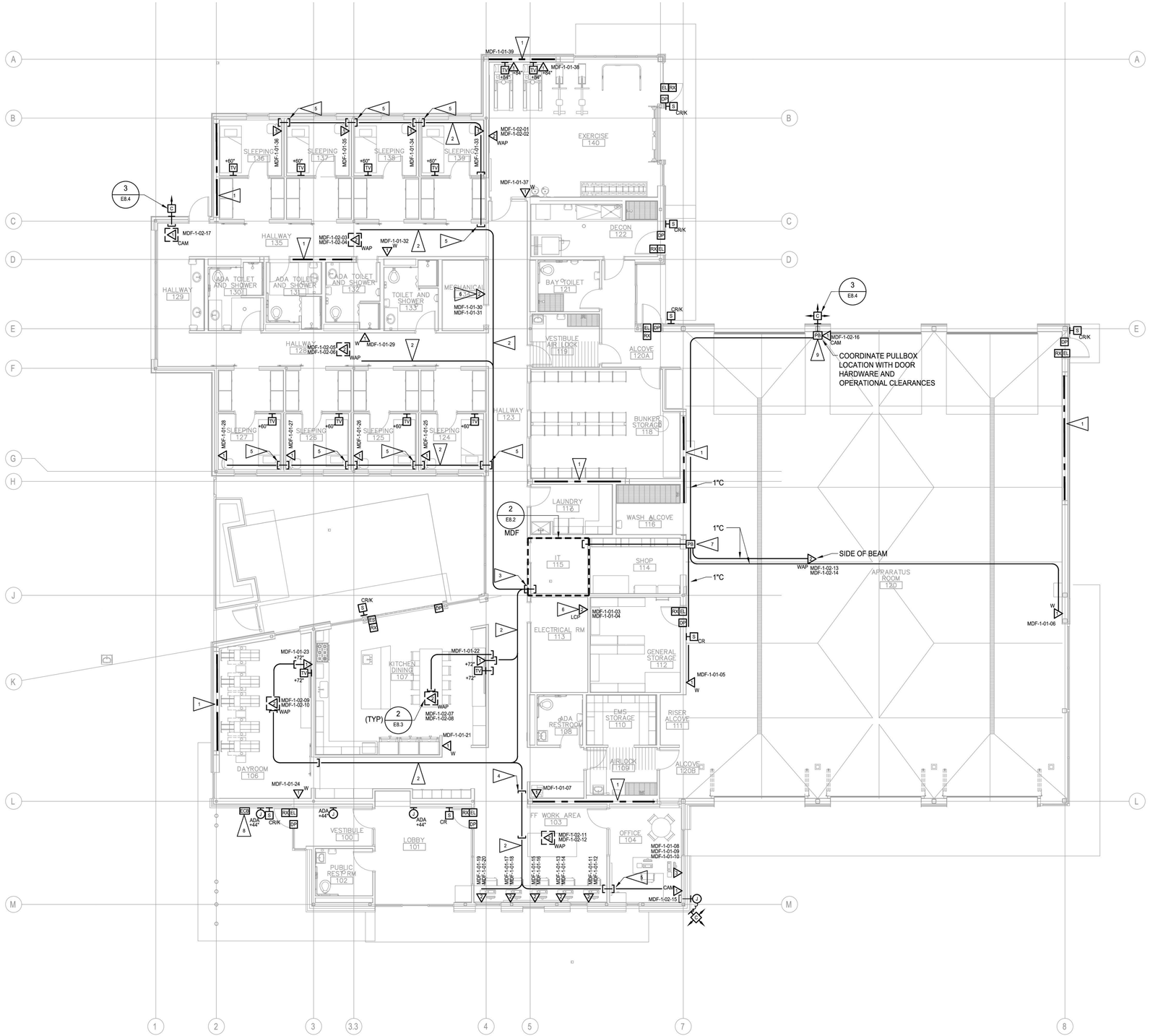

1ST FLOOR TELECOM AND SECURITY PLAN

N 1 E5.1 SCALE: 1/8" = 1'0"

SHEET NOTES:

1. INSTALL ALL DEVICE BOXES PRIOR TO INSTALLATION OF CONDUIT. SCHEDULE WALK-THROUGH WITH ARCHITECT AND OWNER PRIOR TO INSTALLATION OF ANY CONDUIT.
2. SEE SHEET E0.3 FOR BACK BOX AND CONDUIT ROUGH-IN REQUIREMENTS.
3. SEE DETAILS 4 & 5 ON SHEET E8.4 FOR ACCESS CONTROL SYSTEM ROUGH-IN REQUIREMENTS AND DOOR HARDWARE COORDINATION. ACCESS CONTROL J-BOX, SHOWN IN THE DETAILS ABOVE CONTROLLED DOORS, SHALL BE PROVIDED IN THE ACCESSIBLE CEILING SPACE DIRECTLY ABOVE DOOR. IN OPEN TO STRUCTURE OR HARD-LID CEILING SPACES, LOCATE IN NEAREST ACCESSIBLE CEILING SPACE.
4. COORDINATE DEVICE LOCATIONS AND HEIGHTS WITH ARCHITECTURAL ELEVATION DRAWINGS.
5. OPEN CABLING PATHWAYS HAVE BEEN SHOWN FOR MAIN PATHWAYS ONLY. J-HOOKS SHALL BE PROVIDED TO EACH DEVICE LOCATION. J-HOOKS SHALL BE SPACED NO MORE THAN 60" APART AND BE PROVIDED WITH A DEDICATED SUPPORT DEVICE OR HANGER FROM THE STRUCTURE OR WALLS. PROVIDE SEPARATE J-HOOK PATHWAY FOR EACH LOW VOLTAGE SYSTEM WITH 3" MINIMUM SEPARATION FROM TELECOMMUNICATION SYSTEM CABLING.
6. LOW VOLTAGE CONDUIT SLEEVES HAVE BEEN INDICATED FOR MAIN PATHWAYS. PATHWAYS SHALL BE PROVIDED WHERE CABLING PENETRATES A WALL. PROVIDE (3)1"C SLEEVES AS A MINIMUM FOR TELECOM, SECURITY AND A SPARE AT EACH SLEEVE LOCATION AS REQUIRED FOR CABLE PATHWAY, UNLESS NOTED OTHERWISE.

FLAG NOTES:

1. BRACE FRAME LOCATION. STUB CONDUIT FROM ABOVE BRACE FRAME OR UP FROM BELOW SLAB AS REQUIRED. SEE STRUCTURAL SHEETS S2.1 FOR ADDITIONAL INFORMATION.
2. LOW VOLTAGE OPEN CABLING PATHWAY IN ACCESSIBLE CEILING SPACE. SEE SHEET NOTE FOR ADDITIONAL INFORMATION.
3. PROVIDE THE FOLLOWING CONDUITS/SLEEVES ABOVE THE CEILING, IN THE ACCESSIBLE CEILING SPACE:
   (3)4"C - TELECOMMUNICATIONS
   (1)4"C - SECURITY (ACCESS CONTROL / INTRUSION)
   (1)4"C - ALERTING
   (1)2"C - CATV
4. PROVIDE THE FOLLOWING CONDUITS/SLEEVES ABOVE THE CEILING , IN THE ACCESSIBLE CEILING SPACE:
   (1)4"C - TELECOMMUNICATIONS
   (1)1"C - SECURITY (ACCESS CONTROL AND INTRUSION)
   (1)1"C - ALTERTING
   (1)1"C - CATV
5. PROVIDE THE FOLLOWING CONDUITS/SLEEVES ABOVE THE CEILING , IN THE ACCESSIBLE CEILING SPACE:
   (1)2"C - TELECOMMUNICATIONS
   (1)1"C - SECURITY (ACCESS CONTROL AND INTRUSION)
   (1)1"C - ALTERTING
   (1)1"C - CATV
6. BUILDING SYSTEM NETWORK DEVICE. COORDINATE FINAL LOCATION WITH SYSTEM CONTRACTOR.
7. PROVIDE 12"x12"x4" TELECOMMUNICATIONS PULL BOX ON WALL FOR TELECOMMUNICATIONS CABLING TO NETWORK DEVICES.
8. PROVIDE RECESSED 4"SQ BACK BOX WITH 1"C TO ACCESSIBLE CEILING. COORDINATE EXACT MOUNTING HEIGHT PER EMERGENCY CALL BOX MANUFACTURER RECOMMENDATIONS FOR ANALOG TELEPHONE LINE FROM MDF.
9. PROVIDE 6"x6"X4" PULL BOX WITH SURFACE MOUNT TELECOMMUNICATION OUTLET INSIDE FOR PATCH CORD CONNECTION TO FUTURE IP CAMERA.

TCA
ARCHITECTURE □ PLANNING □ DESIGN
6211 ROOSEVELT WAY NORTHEAST
SEATTLE, WA 98115
tel: (206)522-3830
fax: (206)522-2456

CASE ENGINEERING
ELECTRICAL | LIGHTING | TELECOM | SECURITY
19515 North Creek Parkway, Suite 302
Bothell, WA 98011
425-402-9400 office@caseeng.com
17330

MICHAEL S CASE
STATE OF WASHINGTON
07/21/2020
33273
REGISTERED
PROFESSIONAL ENGINEER

BID SET

No.	Description	Date:

Project Title:

FIRE STATION 24
City of Kirkland
Kirkland, Washington

Sheet Title:

1ST FLOOR
TELECOM AND SECURITY PLAN

Scale: NOTED
Project No. : 16-46
Date : July 21, 2020

Sheet Number :

E5.1

Provided to Builders Exchange of WA, Inc. For usage Conditions Agreement see www.bxwa.com - Always Verify Scal

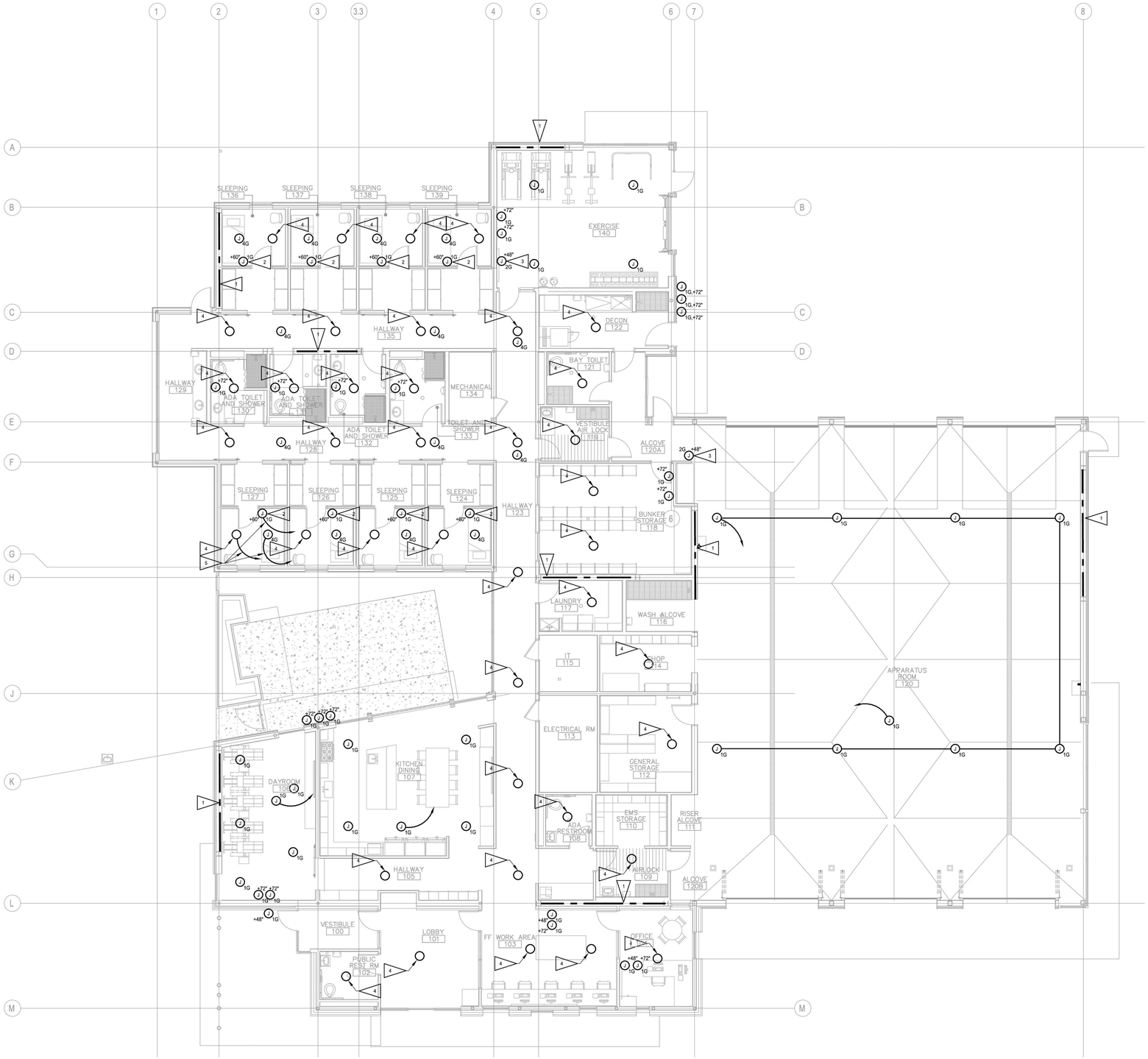

1 N E6.1 1ST FLOOR ALERTING PLAN
SCALE: 1/8" = 1'0"

GENERAL NOTES

1. PROVIDE ALL ELECTRICAL ROUGH-IN.
2. INSTALL ALL DEVICE BOXES PRIOR TO INSTALLATION OF CONDUIT. SCHEDULE WALK-THROUGH WITH ARCHITECT AND OWNER PRIOR TO INSTALLATION OF ANY CONDUIT.
3. PROVIDE EMT FOR ALL ALERTING SYSTEM DEVICE CONNECTIONS IN THE APPARATUS BAY.

FLAG NOTES

1. BRACE FRAME LOCATION. STUB CONDUIT FROM ABOVE BRACE FRAME OR UP FROM BELOW SLAB AS REQUIRED. SEE STRUCTURAL SHEETS S2.1 FOR ADDITIONAL INFORMATION.
2. MOUNT 1-GANG BOX HORIZONTALLY.
3. PROVIDE WITH 3.5MM JACK.
4. PROVIDE JBL MTC-26MR.
5. HOMERUN CABLE FROM EACH SLEEPING ROOM DEVICE. (TYPICAL 8 SLEEP ROOMS)

TCA
ARCHITECTURE □ PLANNING □ DESIGN
6211 ROOSEVELT WAY NORTHEAST
SEATTLE, WA 98115
tel: (206) 522-3830
fax: (206) 522-2456

CASE ENGINEERING
ELECTRICAL | LIGHTING | TELECOM | SECURITY
19515 North Creek Parkway, Suite 302
Bothell, WA 98011
425-402-9400 office@caseeng.com
17330

MICHAEL S CASE
STATE OF WASHINGTON
07/21/2020
33273
REGISTERED
PROFESSIONAL ENGINEER

BID SET

No.	Description	Date:

Project Title:

FIRE STATION 24
City of Kirkland
Kirkland, Washington

Sheet Title:

1ST FLOOR
ALERTING PLAN

Scale: NOTED
Project No. : 16-46
Date : July 21, 2020

Sheet Number :

E6.1

Provided to Builders Exchange of WA, Inc. For usage Conditions Agreement see www.bxwa.com - Always Verify Scal

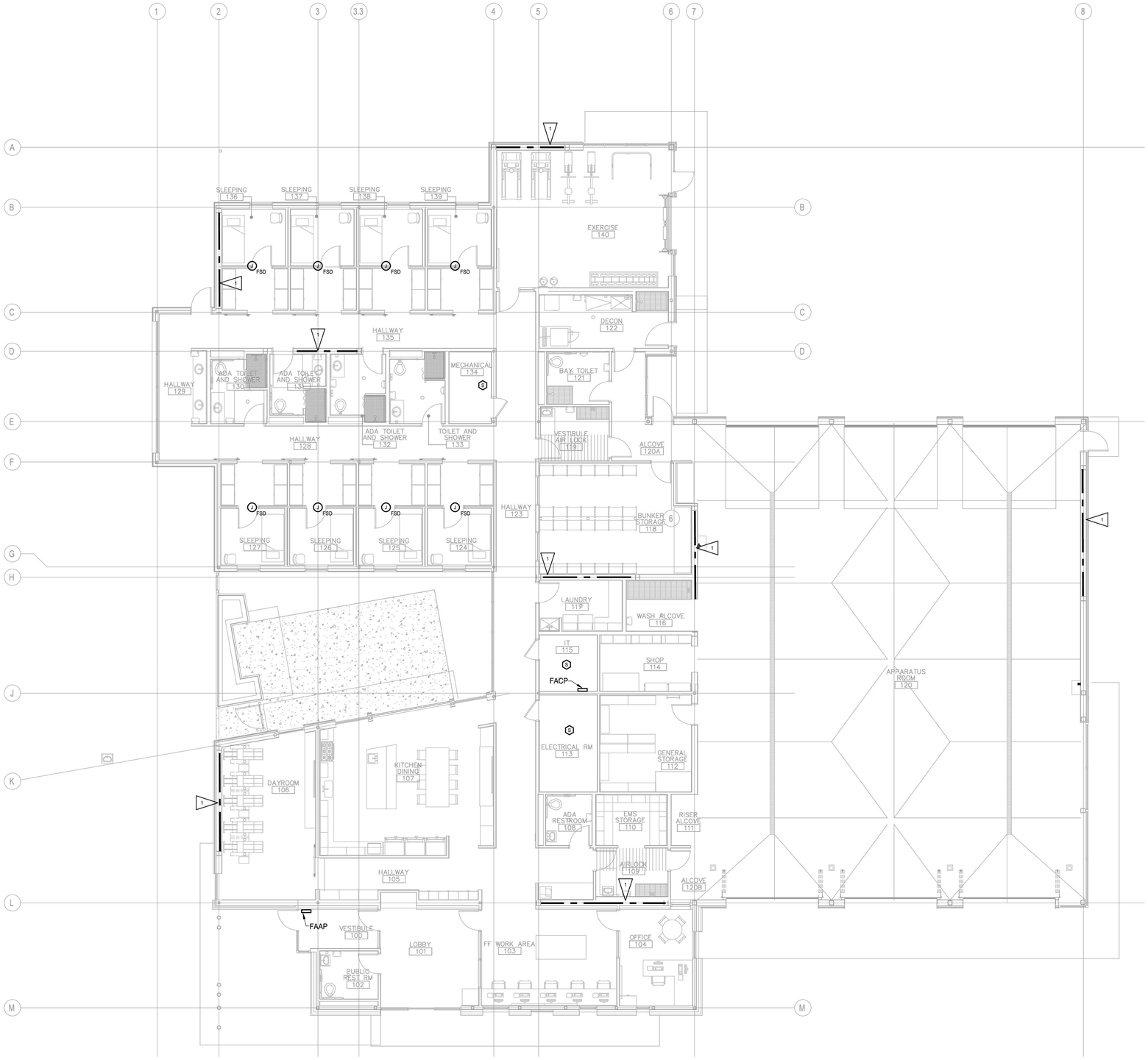

N

1 E7.1

1ST FLOOR FIRE ALARM PLAN

SCALE: 1/8" = 1'0"

FIRE ALARM GENERAL NOTES

1. FIRE ALARM SYSTEM IS BIDDER DESIGNED. SEE SPECIFICATIONS SECTION 28 31 11 FOR ADDITIONAL INFORMATION.
2. COORDINATE ALL DEVICE LOCATIONS WITH ARCHITECTURAL INTERIOR ELEVATIONS PRIOR TO ROUGH-IN.
3. SUBMIT COMPLETE DRAWINGS AND CALCULATION TO AUTHORITY HAVING JURISDICTION FOR APPROVAL.
4. SUBMIT APPROVED DRAWINGS AND CALCULATIONS TO ENGINEER FOR REVIEW.
5. FOR ANY DEVICE MOUNTING LOCATION THAT CONFLICTS WITH A MIRROR, GENERAL CONTRACTOR SHALL COORDINATE DEVICE LOCATION WITH ARCHITECT PRIOR TO ROUGH-IN.

FLAG NOTES

1. BRACE FRAME LOCATION. STUB CONDUIT FROM ABOVE BRACE FRAME OR UP FROM BELOW SLAB AS REQUIRED. SEE STRUCTURAL SHEETS S2.1 FOR ADDITIONAL INFORMATION.

TCA
ARCHITECTURE □ PLANNING □ DESIGN
6211 ROOSEVELT WAY NORTHEAST
SEATTLE, WA 98115
tel: □206□522-3830
□ax: □206□522-2456

CASE ENGINEERING
ELECTRICAL | LIGHTING | TELECOM | SECURITY
19515 North Creek Parkway, Suite 302
Bothell, WA 98011
425-402-9400 office@caseeng.com
17330

MICHAEL S CASE
STATE OF WASHINGTON
07/21/2020
33273
REGISTERED
PROFESSIONAL ENGINEER

BID SET

No.	Description	Date:

Project Title:

FIRE STATION 24

City of Kirkland
Kirkland, Washington

Sheet Title:

1ST FLOOR
FIRE ALARM PLAN

Scale: NOTED
Project No. : 16-46
Date : July 21, 2020

Sheet Number :

E7.1

Provided to Builders Exchange of WA, Inc. For usage Conditions Agreement see www.bxwa.com - Always Verify Scal

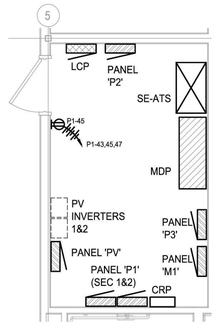

N 1 E8.1 DETAIL - ELECTRICAL 118 ENLARGED PLAN
SCALE: 1/4" = 1'0"

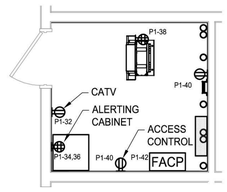

N 2 E8.1 DETAIL - IT ROOM 119 ENLARGED POWER PLAN
SCALE: 1/4" = 1'0"

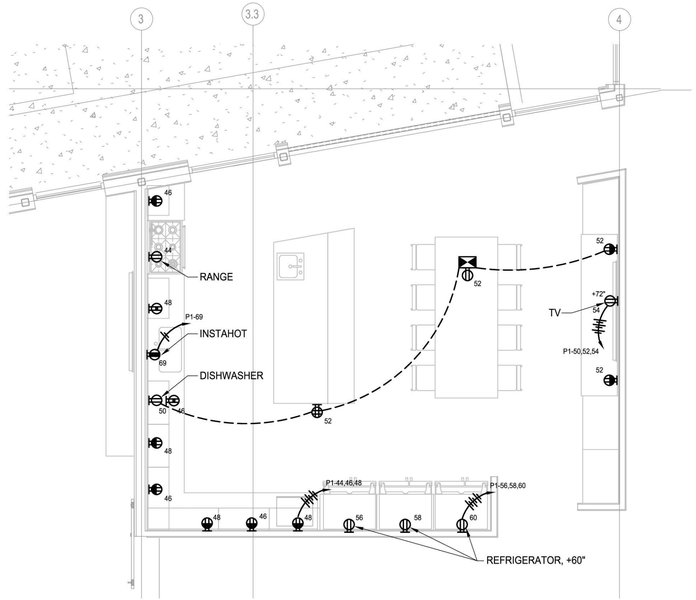

N 3 E8.1 DETAIL - KITCHEN/DINING 107 ENLARGED PLAN
SCALE: 1/4" = 1'0"

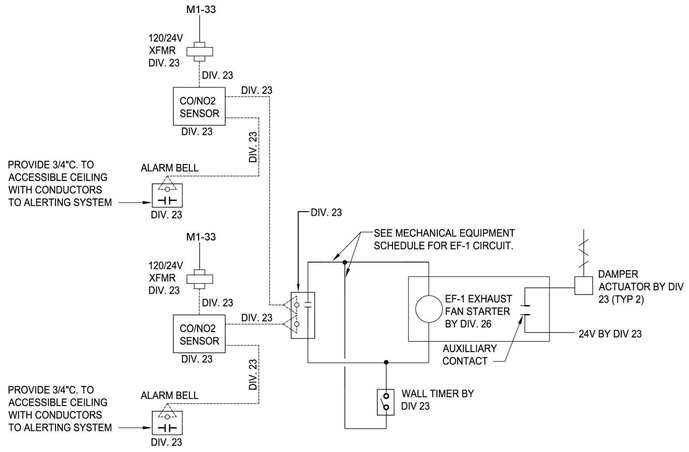

6 E8.1 DETAIL - CO/NO2 SENSOR
SCALE: NONE

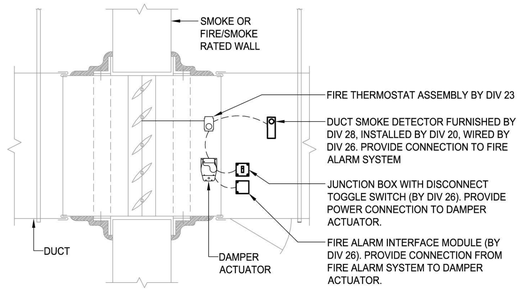

5 E8.1 DETAIL - FIRE/SMOKE DAMPER
SCALE: NONE

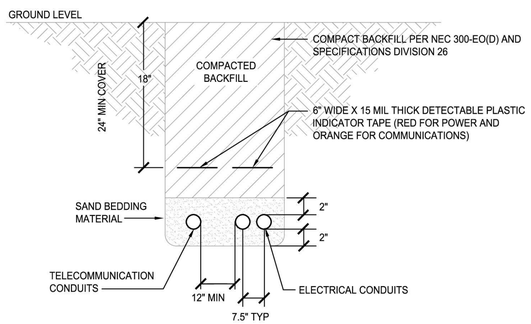

8 E8.1 SECONDARY SIDE SERVICE TRENCH DETAIL
SCALE: NONE

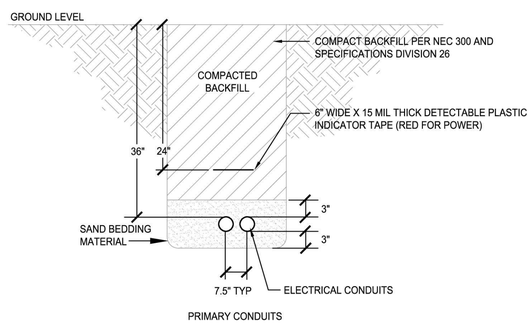

7 E8.1 PRIMARY SIDE SERVICE TRENCH DETAIL
SCALE: NONE

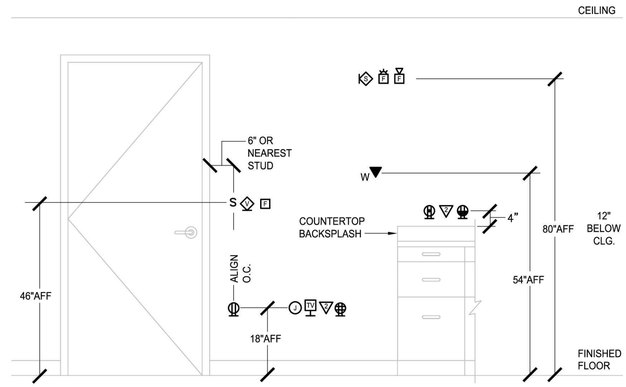

GENERAL NOTES

1. MOUNTING HEIGHTS ARE TO THE CENTER OF THE DEVICE AS SHOWN UNLESS OTHERWISE NOTED ON PLANS.
2. VERIFY ALL MOUNTING HEIGHTS WITH ARCHITECT PRIOR TO ROUGH-IN.
3. ALIGN OUTLETS VERTICALLY WHERE POSSIBLE.
4. MOUNTING HEIGHTS SHOWN ON DETAIL SUPERCEDE THOSE SHOWN ON PLANS. NOTIFY ARCHITECT, IMMEDIATELY, OF ANY CONFLICTS.
5. FOR ANY DEVICE MOUNTING LOCATION THAT CONFLICTS WITH A MIRROR, GENERAL CONTRACTOR SHALL COORDINATE DEVICE LOCATION WITH ARCHITECT PRIOR TO ROUGH IN.
6. PROVIDE STAINLESS STEEL COVERPLATES IN ALL APPARATUS BAYS, WORK AREAS AND KITCHEN.

4 E8.1 DETAIL - TYPICAL MOUNTING HEIGHTS
SCALE: NONE

TCA
ARCHITECTURE □ PLANNING □ DESIGN
6211 ROOSEVELT WAY NORTHEAST
SEATTLE, WA 98115
tel: (206)522-3830
fax: (206)522-2456

CASE ENGINEERING
ELECTRICAL | LIGHTING | TELECOM | SECURITY
19515 North Creek Parkway, Suite 302
Bothell, WA 98011
425-402-9400 office@caseeng.com
17330

MICHAEL S CASE STATE OF WASHINGTON 07/21/2020 33273 REGISTERED PROFESSIONAL ENGINEER

BID SET

No.	Description	Date:

Project Title:

FIRE STATION 24
City of Kirkland
Kirkland, Washington

Sheet Title:
ENLARGED PLANS, ELECTRICAL DETAILS

Scale: NOTED
Project No. : 16-46
Date : July 21, 2020

Sheet Number :

E8.1

Provided to Builders Exchange of WA, Inc. For usage Conditions Agreement see www.bxwa.com - Always Verify Scal

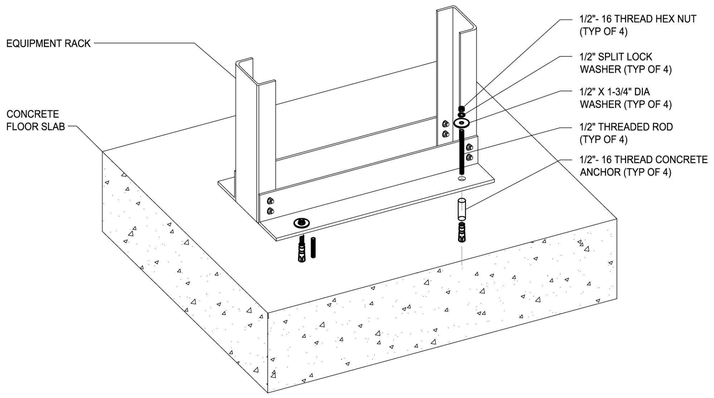

DETAIL NOTES:

1. CONFIRM PLACEMENT AND DEPTH OF CONCRETE ANCHOR WITH STRUCTURAL ENGINEER PRIOR TO ROUGH-IN AND INSTALLATION.
2. CONCRETE ANCHORS REQUIRE A 3/4" DIAMETER X 2-1/2" DEEP DRILLED PENETRATION IN CONCRETE FLOOR SLAB.

1 E8.2 DETAIL- TWO-POST EQUIPMENT RACK INSTALLATION

SCALE: NONE

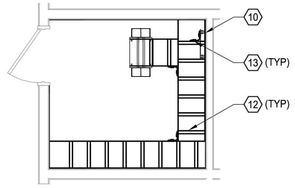

OVERHEAD CABLE RUNWAY

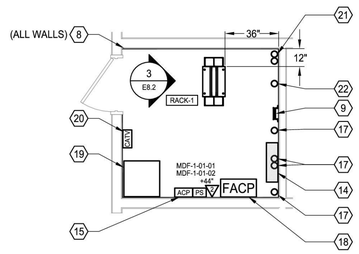

EQUIPMENT FLOOR PLAN LAYOUT

2 E8.2 DETAIL- IT ROOM 115 ENLARGED PLAN

SCALE: 1/4" = 1'0"

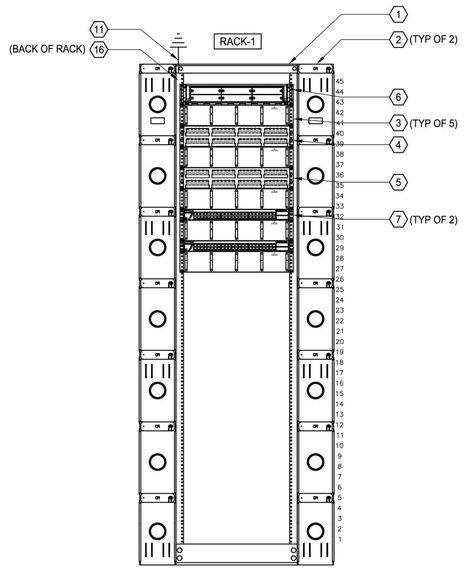

3 E8.2 DETAIL- MDF RACK ELEVATION

SCALE: NONE

RACK REQUIREMENTS:

1. PROVIDE COMPLETE RACK ASSEMBLY, INCLUDING ANCHOR BOLTS, CLAMPS, RACKS AND MISC. INSTALLATION HARDWARE. CONTRACTOR SHALL EQUIP EACH RACK AS SHOWN, AND AS DESCRIBED IN THE SPECIFICATIONS. PROVIDE CABLE MANAGEMENT PANELS, PATCH PANELS, ETC., UNLESS NOTED OTHERWISE.
2. GROUND EQUIPMENT TO NEAREST NEC RECOGNIZED GROUNDING ELECTRODE SUBSYSTEM WITH A DEDICATED #6 AWG COPPER, STRANDED, GREEN GROUNDING CONDUCTOR.
3. ASSEMBLE EQUIPMENT RACKS SO RACK UNIT 1 IS NEAREST TO THE FLOOR AND NUMBERS INCREASE VERTICALLY.

RACK COMPONENTS:

1. 19"W X 7'-0"H TWO POST EQUIPMENT RACK.
2. 6"W, DOUBLE SIDED VERTICAL CABLE MANAGEMENT PANEL.
3. 2-RU HORIZONTAL CABLE MANAGEMENT PANEL.
4. CATEGORY 6A 48-PORT STATION PATCH PANEL.
5. CATEGORY 6A 48-PORT PATCH PANEL FOR WIRELESS AP AND IP CAMERA NETWORK CABLING.
6. 2-RU RMFC FOR OWNER WAN SINGLE-MODE OPTICAL FIBER SERVICE ENTRANCE (BY OTHERS/OWNER).
7. ETHERNET NETWORK SWITCH, (OFOI).
8. 3/4", 4'-0" X 8'-0" FIRE RETARDANT PLYWOOD BACKBOARD, MOUNT AT +6"AFF.
9. CATEGORY 3, 50-PAIR 110-BLOCK "BLUE FIELD" WITH LEGS.
10. 20" TMGB, MOUNT -12" BELOW LADDER RACK.
11. DEDICATED #6AWG EQUIPMENT GROUND TO TMGB PER NEC, EIA/TIA STANDARDS WITH 2-HOLE GROUND LUG.
12. 18"W LADDER RACK, MOUNT AT +7'-0" AFF, UON.
13. BONDING STRAP #6AWG WITH 2-HOLE GROUND LUG.
14. SPACE ALLOCATED FOR SERVICE PROVIDER EQUIPMENT, PROVIDE #6AWG AND COIL 10' SERVICE LOOP.
15. ACCESS CONTROL SYSTEM PANEL AND POWER SUPPLY (BY OTHERS).
16. VERTICAL POWER STRIP WITH 9" STAND-OFF BRACKETS.
17. OSP SERVICE ENTRANCE PATHWAY, SEE SITE PLAN FOR QUANTITY AND SIZES.
18. FIRE ALARM CONTROL PANEL (FACP).
19. LOCUTION ALERTING SYSTEM EQUIPMENT RACK (BY OTHERS).
20. CATV AMPLIFIER, TAP AND SPITTERS.
21. OSP PATHWAY TO FUTURE TRAINING BUILDING, SEE SITE PLAN FOR QUANTITY AND SIZES.
22. OSP PATHWAYS TO FUTURE READERBOARD AND ART LOCATIONS, SEE SITE PLAN FOR QUANTITY AND SIZES.

TCA
ARCHITECTURE □ PLANNING □ DESIGN
6211 ROOSEVELT WAY NORTHEAST
SEATTLE, WA 98115
tel: □206□522-3830
□ax: □206□522-2456

CASE ENGINEERING
ELECTRICAL | LIGHTING | TELECOM | SECURITY
19515 North Creek Parkway, Suite 302
Bothell, WA 98011
425-402-9400 office@caseeng.com
17330

MICHAEL S CASE
STATE OF WASHINGTON
07/21/2020
33273
REGISTERED
PROFESSIONAL ENGINEER

BID SET

No.	Description	Date:

Project Title:

FIRE STATION 24
City of Kirkland
Kirkland, Washington

Sheet Title:

TELECOMMUNICATIONS ENLARGED PLAN AND DETAILS

Scale: NOTED
Project No. : 16-46
Date : July 21, 2020

Sheet Number :

E8.2

Provided to Builders Exchange of WA, Inc. For usage Conditions Agreement see www.bxwa.com - Always Verify Scal

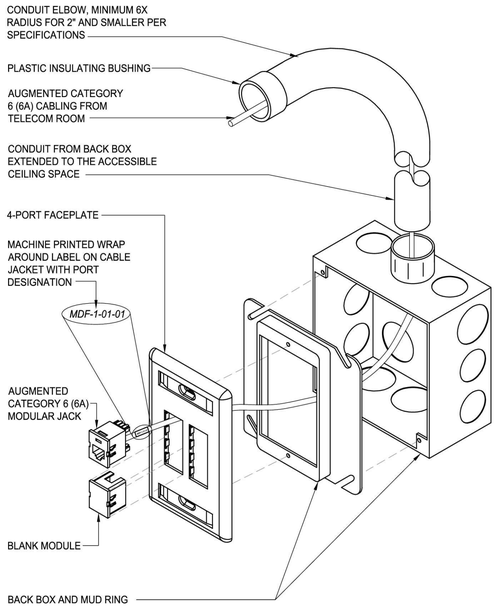

DETAIL NOTES:

1. CONDUIT SHALL BE CONTINUOUS FROM BACK BOX TO ACCESSIBLE CEILING SPACE OR AS INDICATED ON PLANS.
2. SEE TELECOMMUNICATIONS ROUGH-IN SCHEDULE FOR CONDUIT AND BACK BOX REQUIREMENTS.
3. PROVIDE BLANK MODULES TO FILL SPARE SPACES IN FACEPLATES.
4. NOT ALL PARTS SHOWN. CONTRACTOR SHALL ENSURE A COMPLETE WORKING INSTALLATION INCLUDING MISCELLANEOUS APPURTENANCES.

1 E8.2 DETAIL- TELECOMMUNICATIONS DEVICE ROUGH-IN
SCALE: NONE

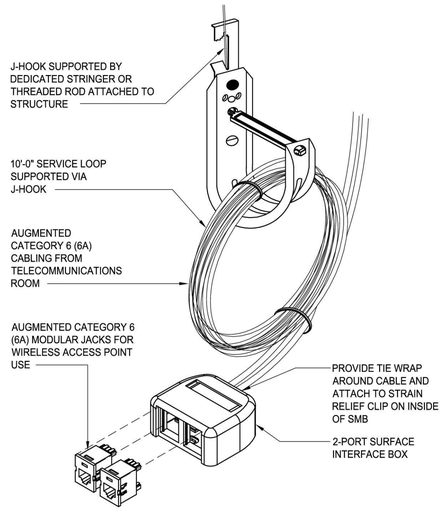

DETAIL NOTES:

1. WIRELESS ACCESS POINT TELECOMMUNICATIONS OUTLET ASSEMBLY LOCATED IN ACCESSIBLE CEILING SPACE SUPPORTED A MINIMUM OF 12" ABOVE THE CEILING GRID.
2. NOT ALL PARTS SHOWN. CONTRACTOR SHALL ENSURE A COMPLETE WORKING INSTALLATION INCLUDING MISCELLANEOUS APPURTENANCES.
3. PROVIDE ENGRAVED LABEL ON CEILING T-BAR GRID WHERE WIRELESS ACCESS POINT OUTLET ASSEMBLY IS LOCATED IN THE ACCESSIBLE CEILING SPACE.

2 E8.2 DETAIL- WIRELESS ACCESS POINT TELECOMMUNICATIONS DEVICE
SCALE: NONE

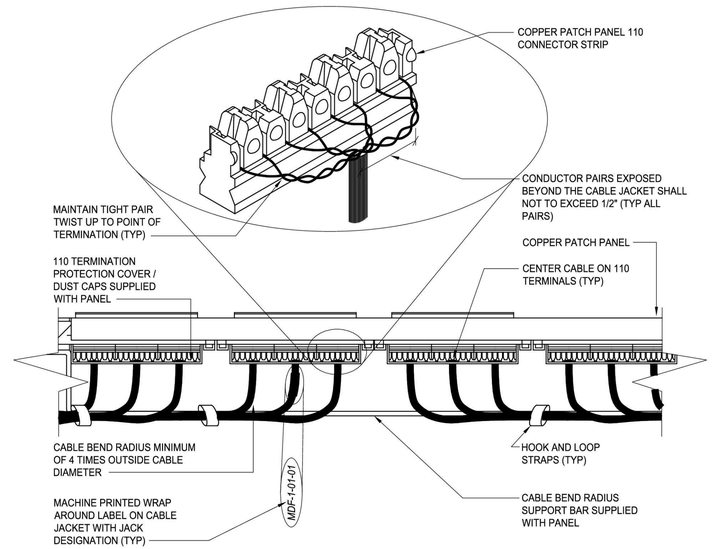

3 E8.2 DETAIL- COPPER PATCH PANEL TERMINATION
SCALE: NONE

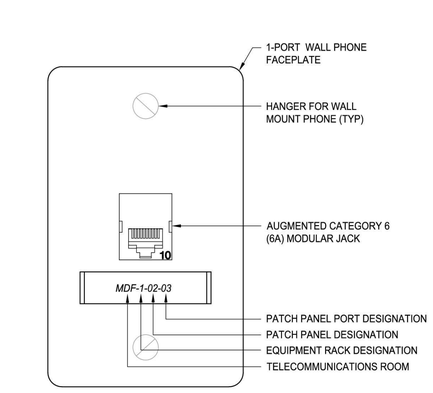

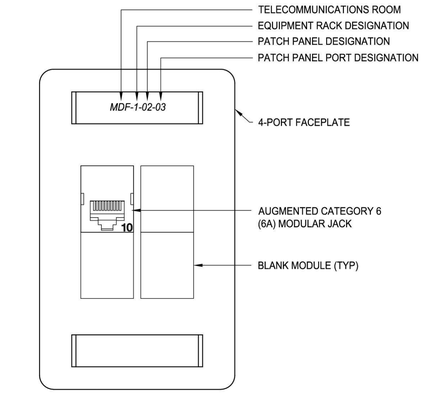

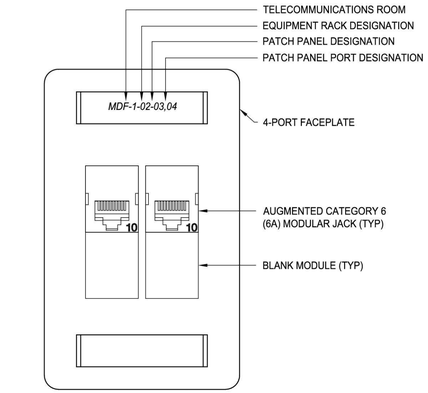

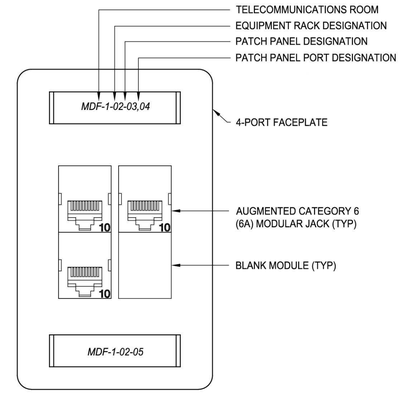

4 E8.2 DETAIL- ORGANIZATION AND LABELING
SCALE: NONE

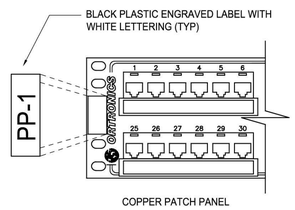

5 E8.3 DETAIL- COPPER PATCH PANEL LABELING
SCALE: NONE

TCA
ARCHITECTURE □ PLANNING □ DESIGN
6211 ROOSEVELT WAY NORTHEAST
SEATTLE, WA 98115
tel: (206)522-3830
fax: (206)522-2456

CASE ENGINEERING
ELECTRICAL | LIGHTING | TELECOM | SECURITY
19515 North Creek Parkway, Suite 302
Bothell, WA 98011
425-402-9400 office@caseeng.com
17330

MICHAEL S CASE
STATE OF WASHINGTON
07/21/2020
33273
REGISTERED
PROFESSIONAL ENGINEER

BID SET

No.	Description	Date:

Project Title:

FIRE STATION 24
City of Kirkland
Kirkland, Washington

Sheet Title:

TELECOMMUNICATIONS DETAILS

Scale: NOTED
Project No. : 16-46
Date : July 21, 2020

Sheet Number :

E8.3

Provided to Builders Exchange of WA, Inc. For usage Conditions Agreement see www.bxwa.com - Always Verify Scal

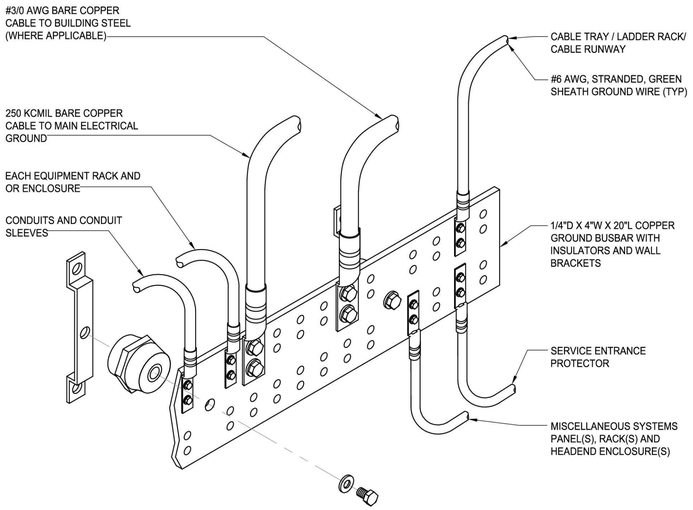

DETAIL NOTES:

1. NOT ALL PARTS AND PART NUMBERS ARE SHOWN. THE CONTRACTOR IS RESPONSIBLE FOR A COMPLETE WORKING INSTALLATION INCLUDING, MISCELLANEOUS APPURTENANCES.
2. THE CONTRACTOR SHALL ISSUE A SUBSTITUTION REQUEST FOR CHANGES TO THIS DETAIL.
3. CONTRACTOR SHALL PROVIDE PLENUM RATED SHEATH WHERE REQUIRED.
4. ALL GROUNDING CABLE CONNECTOR GROUND LUGS SHALL UTILIZE TWO-HOLE COMPRESSION FITTINGS ON EACH END.

1 E8.4 DETAIL - TELECOMMUNICATIONS MAIN GROUND BUSBAR ASSEMBLY- 20"

SCALE: NONE

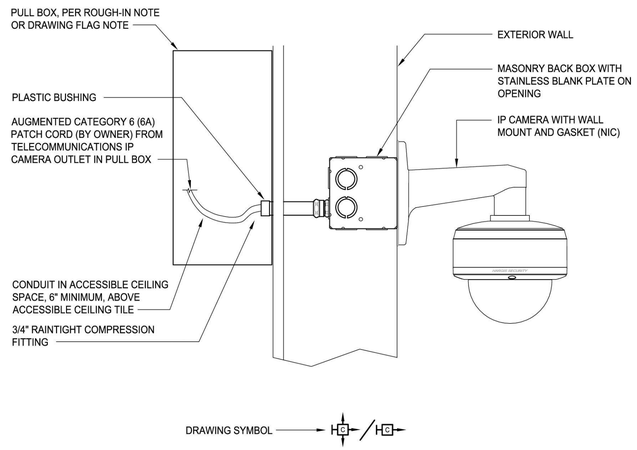

DETAIL NOTES:

1. SEE DRAWINGS FOR CONDUIT STUB FROM MASONRY BACK BOX TO PULL BOX ON INTERIOR IN OPEN TO CEILING APPLICATIONS.

2 E8.4 DETAIL- EXTERIOR WALL MOUNT IP CAMERA ROUGH-IN

SCALE: NONE

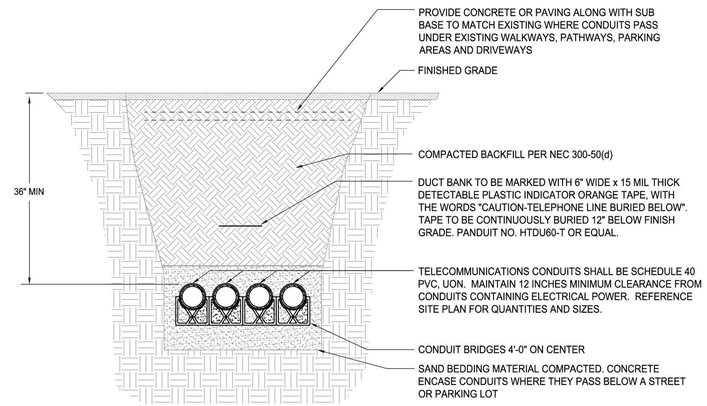

DETAIL NOTES:

1. REFER TO SITE AND LANDSCAPE PLANS FOR INFORMATION SPECIFIC TO THIS SITE.

3 E8.4 DETAIL- TELECOMMUNICATIONS VAULT DUCT BANK

SCALE: NONE

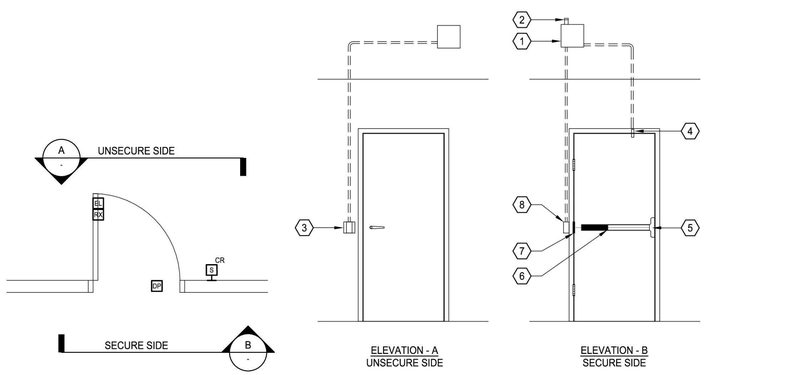

DETAIL NOTES:

1. DETAIL SHOWN IS A TYPICAL ELEVATION, REFER TO FLOOR PLANS FOR EXACT DOOR ORIENTATION, DEVICE TYPES AND DEVICE PLACEMENTS RELATIVE TO DOOR POSITION AND SWING.
2. SEE SHEET E0.3 FOR ACCESS CONTROL ROUGH-IN SCHEDULE.
3. ACCESS CONTROL DEVICES PROVIDED BY OWNER.
4. DOOR HARDWARE DEVICES AND WIRING HARNESSES PROVIDED BY DIV.08.

4 E8.4 DETAIL- SINGLE DOOR CARD-IN, EXIT DEVICE ROUGH-IN

SCALE: NONE

DOOR SECURITY NOTE:

1. COORDINATE ROUGH-IN WITH DOOR HARDWARE, ELECTRICAL CONTRACTOR AND OWNERS ACCESS CONTROL SYSTEM INSTALLER.
2. ACCESS CONTROL DEVICE ROUGH-IN FOR EXTERIOR BI-FOLDING DOOR SHALL REQUIRE ENHANCED COORDINATION PRIOR TO AND DURING FRAMING FOR DEVICE LOCATION AND CABLE/ WIRING HARNESS PATHWAY.

DOOR SECURITY COMPONENTS:

1. 12 " x 12 " x 6" JUNCTION BOX (1 PER DOOR) SHALL BE MOUNTED +12" ABOVE ACCESSIBLE CEILING. WHERE NO CEILING EXISTS, MOUNT AT NEAREST ACCESSIBLE CEILING SPACE. PROVIDE (1)1" NIPPLE ON TOP OF BOX AND (1)1"C TO POWER SUPPLY OR ADA OPERATOR CONTROL J-BOX, WHERE APPLICABLE.
2. CABLING SHALL ROUTE TO ACCESS CONTROL PANEL
3. CARD (IN) READER SHALL BE MOUNTED ON UNSECURE SIDE OF DOOR
4. DOOR POSITION SWITCH SHALL BE RECESSED IN DOOR FRAME
5. ELECTRIFIED LOCKSET OR ELECTRIFIED EXIT DEVICE
6. CABLE CORD THROUGH DOOR, INTEGRAL MICRO REX BUILT INTO DOOR HARDWARE.
7. POWER TRANSFER HINGE
8. MASONRY BACK BOX SHALL BE MOUNTED TO ALLOW ACCESS TO WIRING FROM POWER TRANSFER HINGE

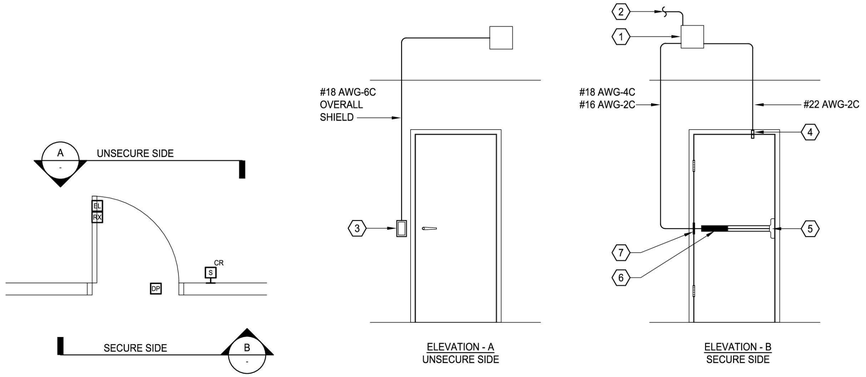

DETAIL NOTES:

1. DETAIL SHOWN IS A TYPICAL ELEVATION, REFER TO FLOOR PLANS FOR EXACT DOOR ORIENTATION, DEVICE TYPES AND DEVICE PLACEMENTS RELATIVE TO DOOR POSITION AND SWING.
2. SEE SHEET E0.3 FOR ACCESS CONTROL ROUGH-IN SCHEDULE.
3. ACCESS CONTROL DEVICES PROVIDED BY OWNER.
4. DOOR HARDWARE DEVICES AND WIRING HARNESSES PROVIDED BY DIV.08.

5 E8.4 DETAIL- SINGLE DOOR CARD-IN, EXIT DEVICE WIRING

SCALE: NONE

TCA
ARCHITECTURE □ PLANNING □ DESIGN
6211 ROOSEVELT WAY NORTHEAST
SEATTLE, WA 98115
tel: (206)522-3830
fax: (206)522-2456

CASE ENGINEERING
ELECTRICAL | LIGHTING | TELECOM | SECURITY
19515 North Creek Parkway, Suite 302
Bothell, WA 98011
425-402-9400 office@caseeng.com
17330

MICHAEL S CASE — STATE OF WASHINGTON — 07/21/2020 — 33273 — REGISTERED PROFESSIONAL ENGINEER

BID SET

No.	Description	Date:

Project Title:

FIRE STATION 24

City of Kirkland
Kirkland, Washington

Sheet Title:

TELECOMMUNICATIONS DETAILS

Scale: NOTED
Project No. : 16-46
Date : July 21, 2020

Sheet Number :

E8.4

Provided to Builders Exchange of WA, Inc. For usage Conditions Agreement see www.bxwa.com - Always Verify Scal

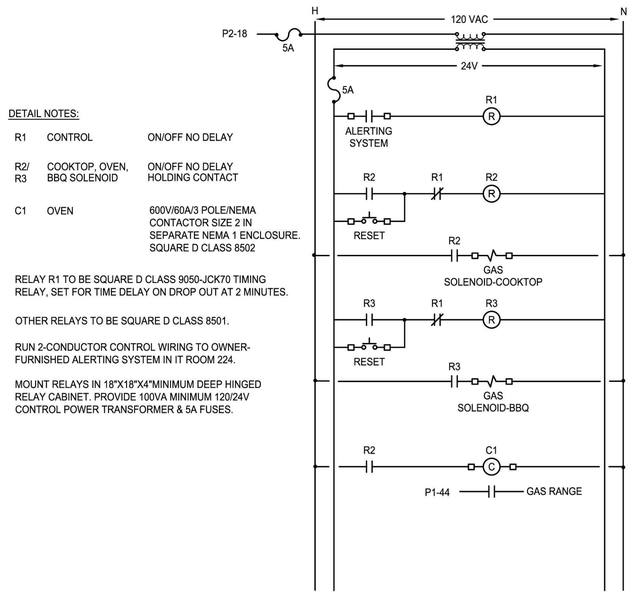

DETAIL NOTES:

R1	CONTROL	ON/OFF NO DELAY
R2/ R3	COOKTOP, OVEN, BBQ SOLENOID	ON/OFF NO DELAY HOLDING CONTACT
C1	OVEN	600V/60A/3 POLE/NEMA CONTACTOR SIZE 2 IN SEPARATE NEMA 1 ENCLOSURE. SQUARE D CLASS 8502

RELAY R1 TO BE SQUARE D CLASS 9050-JCK70 TIMING RELAY, SET FOR TIME DELAY ON DROP OUT AT 2 MINUTES.

OTHER RELAYS TO BE SQUARE D CLASS 8501.

RUN 2-CONDUCTOR CONTROL WIRING TO OWNER-FURNISHED ALERTING SYSTEM IN IT ROOM 224.

MOUNT RELAYS IN 18"X18"X4"MINIMUM DEEP HINGED RELAY CABINET. PROVIDE 100VA MINIMUM 120/24V CONTROL POWER TRANSFORMER & 5A FUSES.

1 E8.5 DETAIL - CONTROL RELAY PANEL

SCALE: NONE

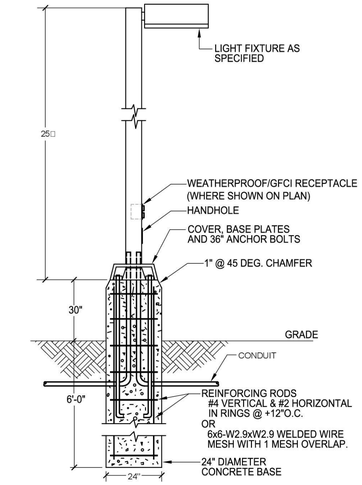

2 E8.5 DETAIL - LIGHT POLE BASE

SCALE: NONE

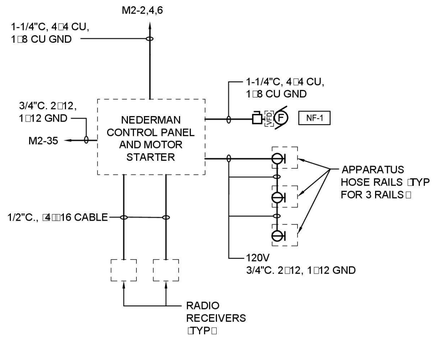

4 E8.5 DETAIL - NEDERMAN CONTROL PANEL DETAIL

SCALE: NONE

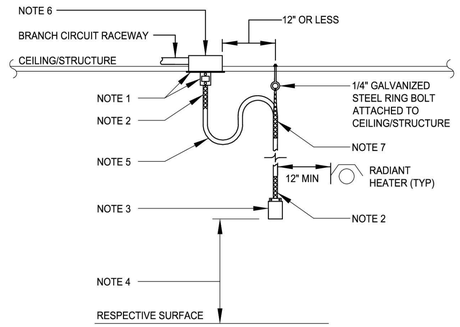

DETAIL NOTES

1. PROVIDE J-BOX WITH TWIST LOCK RECEPTACLE AND PLUG AS INDICATED ON DRAWINGS.
2. PROVIDE STRAIN RELIEF GRIP. COORDINATE TYPE WITH CABLE SIZE.
3. SEE FLAG NOTE 5, SHEET E2.1
4. INSTALL DROP CORD AT HEIGHT AS DIRECTED BY A/E OR OWNER.
5. PROVIDE TYPE "SOOW" CORD CONDUCTORS TO MATCH CIRCUITING SHOWN ON DRAWINGS. SEE POWER FLOOR PLAN SHEETS FOR ADDITIONAL INFORMATION. INSTALL CORD WITH 12" DRIP LOOP PRIOR TO HANGING FROM RING BOLT TO ALLOW RECESSED MOUNTING.
6. PROVIDE J-BOX, RECEPTACLE AND RACEWAY AS INDICATED ON DRAWINGS FOR DROP CORD CONNECTION. SEE POWER FLOOR PLAN SHEETS FOR ADDITIONAL INFORMATION. PROVIDE SURFACE MOUNTED BOX AND SURFACE RACEWAY WHERE CEILING STRUCTURE DOES NOT ALLOW RECESSED MOUNTING.
7. PROVIDE WIRE MESH SUPPORT GRIP. COORDINATE WITH CABLE SIZE.

3 E8.5 DETAIL - APPARATUS BAY DROP CORD

SCALE: NONE

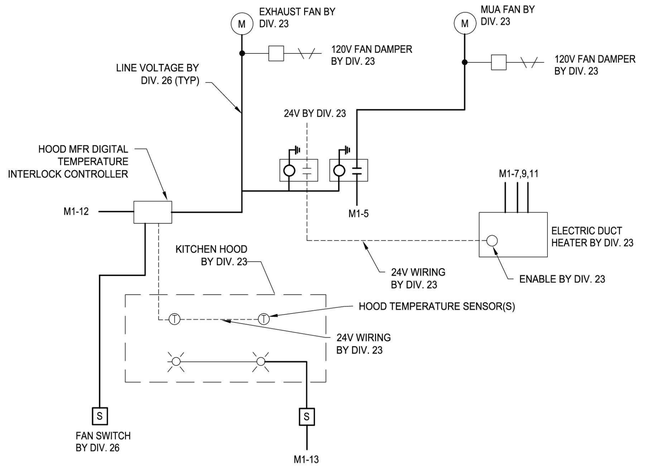

5 E8.5 DETAIL - NEDERMAN CONTROL PANEL DETAIL

SCALE: NONE

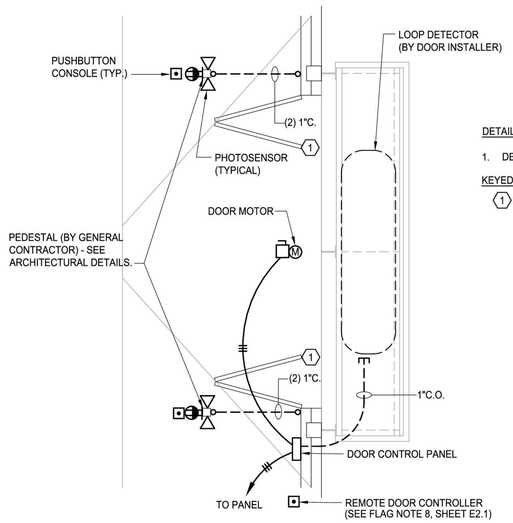

DETAIL NOTES:

1. DETAIL IS TYPICAL FOR BI-FOLD VEHICLE DOORS IN APPARATUS BAYS.

KEYED NOTE:

1. APPARATUS BAY FOUR-FOLD DOOR - PROVIDE ALL RACEWAY AND CONDUCTORS FOR COMPLETE OPERATION AS DESCRIBED IN ARCHITECTURAL SPECIFICATIONS. PROVIDE CONDUIT AND WIRE FOR ALL LOW VOLTAGE DEVICES ASSOCIATED WITH DOOR OPERATOR, INCLUDING PHOTO EYES, PUSHBUTTON OPERATORS, LIMIT SWITCHES, RADIO RECEIVER, ETC. PROVIDE BACKBOXES AS REQUIRED AND MOUNT CONTROL PANEL AND LOW VOLTAGE DEVICES PROVIDED WITH DOOR. PROVIDE 1" CONDUIT UNDER PAVEMENT TO LOOP DETECTOR FOR CABLE INSTALLATION BY DOOR INSTALLER. PROVIDE (2) 1" CONDUIT UNDER FLOOR SLAB TO PEDESTALS. PROVIDE CONDUIT AND WIRE TO DOOR MASTER CONTROL STATION. COORDINATE WITH DOOR INSTALLER PRIOR TO ROUGH-IN.

6 E8.5 DETAIL - BI-FOLD DOOR CONTROL

SCALE: NONE

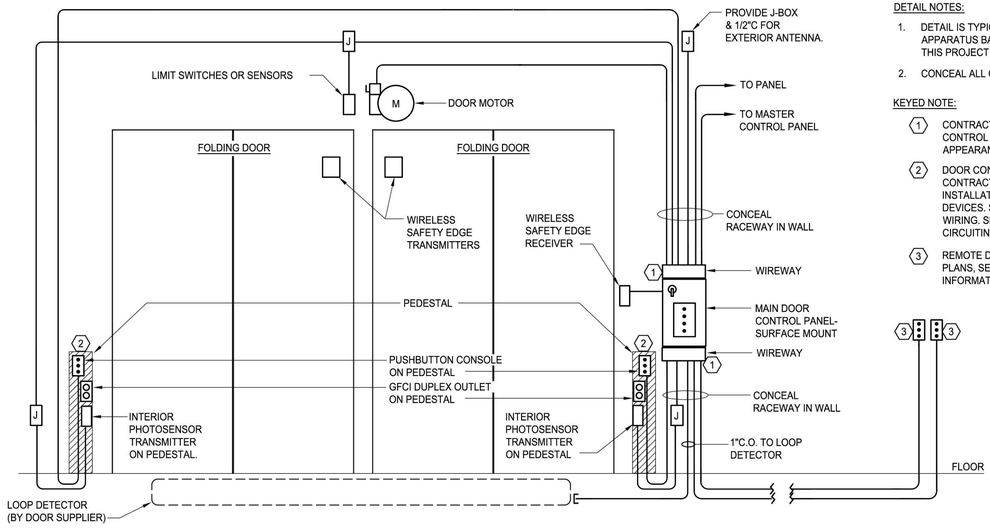

DETAIL NOTES:

1. DETAIL IS TYPICAL FOR BI-FLOLD VEHICLE DOORS IN APPARATUS BAYS. VERIFY EXACT REQUIREMENTS FOR THIS PROJECT WITH DOOR SUPPLIER PRIOR TO ROUGH-IN.
2. CONCEAL ALL CONDUIT AND WIRE.

KEYED NOTE:

1. CONTRACTOR TO PROVIDE WIREWAY SIZED TO MATCH CONTROL PANEL WIDTH & DEPTH FOR FINISHED APPEARANCE.
2. DOOR CONTROL PEDESTAL PROVIDED BY GENERAL CONTRACTOR. SEE ARCHITECTURAL DRAWINGS FOR INSTALLATION DETAILS AND MOUNTING HEIGHTS OF DEVICES. SEE DOOR CONTROL DETAIL FOR CONTROL WIRING. SEE PLAN DRAWINGS FOR ELECTRICAL CIRCUITING.
3. REMOTE DOOR CONTROLLER IN LOCATION SHOWN ON PLANS, SEE FLAG NOTE 8, SHEET E2.1 FOR MORE INFORMATION.

7 E8.4 DETAIL- BI-FOLD DOOR ELEVATION

SCALE: NONE

TCA
ARCHITECTURE □ PLANNING □ DESIGN
6211 ROOSEVELT WAY NORTHEAST
SEATTLE, WA 98115
tel: □206□522-3830
□ax: □206□522-2456

CASE ENGINEERING
ELECTRICAL | LIGHTING | TELECOM | SECURITY
19515 North Creek Parkway, Suite 302
Bothell, WA 98011
425-402-9400 office@caseeng.com
17330

MICHAEL S CASE
STATE OF WASHINGTON
07/21/2020
33273
REGISTERED
PROFESSIONAL ENGINEER

BID SET

No.	Descri□tion	Date:

Project Title:

FIRE STATION 24

City of Kirkland
Kirkland, Washington

Sheet Title:

ELECTRICAL DETAILS

Scale: NOTED
Project No. : 16-46
Date : July 21, 2020

Sheet Number :

E8.5

Provided to Builders Exchange of WA, Inc. For usage Conditions Agreement see www.bxwa.com - Always Verify Scal

Fault Current Calculations

Project: 17330
Job # Kirkland Fire Station 24

Date: 6/11/20

Fault on Load Side of Transformer with Infinite Short Circuit Current on Primary Available.

Node #	kVA	L-L Volt	Ø	%Z	AFC Short Circuit Current
PSE XFMR		208	3		26,900.00

Fault Current at the End of a Run of Cable.

Node #	Short Circuit Current at Beginning of Run	Length of Run	L-L Volt	Conductors Per Phase	Ø	Conductor Type	Raceway Type	Wire Size	Short Circuit Current at End of Cable Run
ATS	26,900.00	140	208	4	3	Copper	Non-Metallic	3/0 AWG	17,209.40
MDP	17,209.40	3	208	4	3	Copper	Non-Metallic	3/0 AWG	17,077.57
Panel P1	17,077.57	12	208	1	3	Copper	Non-Metallic	4/0 AWG	15,491.96
Panel P2	17,077.57	12	208	1	3	Copper	Non-Metallic	1 AWG	13,909.70
Panel P3	17,077.57	4	208	1	3	Copper	Non-Metallic	1/0 AWG	16,094.93
Panel M1	17,077.57	10	208	1	3	Copper	Non-Metallic	350 kcmil	16,072.29
Panel M2	17,077.57	55	208	1	3	Copper	Non-Metallic	4/0 AWG	11,624.45

FEEDER SCHEDULE

TAG	COPPER CONDUCTORS				
	QUANTITY OF SETS	RACEWAY SIZE	CONDUCTORS		
			PHASE	NEUTRAL	GROUND
30N	1	3/4"	3#10	1#10	1#10
70NT	1	1-1/4"	3#4	1#4	1#8
100N	1	1-1/2"	3#1	1#1	1#8
150N	1	2"	3#1/0	1#1/0	1#6
225N	1	2-1/2"	3#4/0	1#4/0	1#4
300N	1	3"	3#350kcmil	1#350kcmil	1#4
800S	4	2"	3#3/0	3#3/0	-
800N	4	2"	3#3/0	1#3/0	1#3

NOTES:

1. COPPER FEEDERS ARE BASED ON COPPER CONDUCTORS WITH THHN/THWN INSULATION. CONDUCTOR DERATING IS BASED ON THHN/THWN CONDUCTORS WITH 75 DEGREES C RATING.
2. REFER TO SHEET(S) E9.1 FOR FEEDER LOCATIONS.

GENERAL NOTES:

1. SEE PANEL SCHEDULES ON E10 SERIES SHEETS FOR PANEL AND BRANCH CIRCUIT INFORMATION.
2. CONNECT ADDITIONAL SECTIONS OF MULTI-SECTION PANELS WITH CONDUCTORS SIZED THE SAME AS THE PANEL FEEDER CONDUCTORS.
3. PROVIDE INNOVATIVE TECHNOLOGIES PTE-080-3Y-101-MT SURGE SUPPRESSOR. PROVIDE SPD FOR EACH PANELBOARD AS SHOWN. (CONTACT PAMELA GOFF AT MORRIS TECHNOLOGIES, 206.930.8710 FOR INSTALLATION INSTRUCTIONS AND INSPECTION)
4. PROVIDE INNOVATIVE TECHNOLOGIES PTX-080-3Y-101-MT SURGE SUPPRESSOR. PROVIDE SPD FOR EACH PANELBOARD AS SHOWN. (CONTACT PAMELA GOFF AT MORRIS TECHNOLOGIES, 206.930.8710 FOR INSTALLATION INSTRUCTIONS AND INSPECTION)
5. PROVIDE INNOVATIVE TECHNOLOGIES PTX-160-3Y-101-MT SURGE SUPRESSOR. PROVIDE A SPD FOR EACH PANELBOARD AS SHOWN. (CONTACT PAMELA GOFF AT MORRIS TECHNOLOGIES, 206.930.8710 FOR INSTALLATION INSTRUCTIONS AND INSPECTION)
6. SERVICE ENTRANCE RATED.
7. GROUND PER WAC & NEC.
8. ALL SWITCHBOARDS, PANELBOARDS, AND DEVICES, SHALL MEET OR EXCEED THE LISTED AVAILABLE FAULT FOR THAT PANEL OR DEVICE. SYSTEM SHALL BE FULLY RATED.
9. CONDUIT FROM PANEL 'PV' TO ROOF SHALL BE (2)1-1/2" EMT BY DIV 26 CONTRACTOR. WIRE SHALL BE BY PV SCOPE BIDDER SOLAR CONTRACTOR (BIDDER DESIGNER).

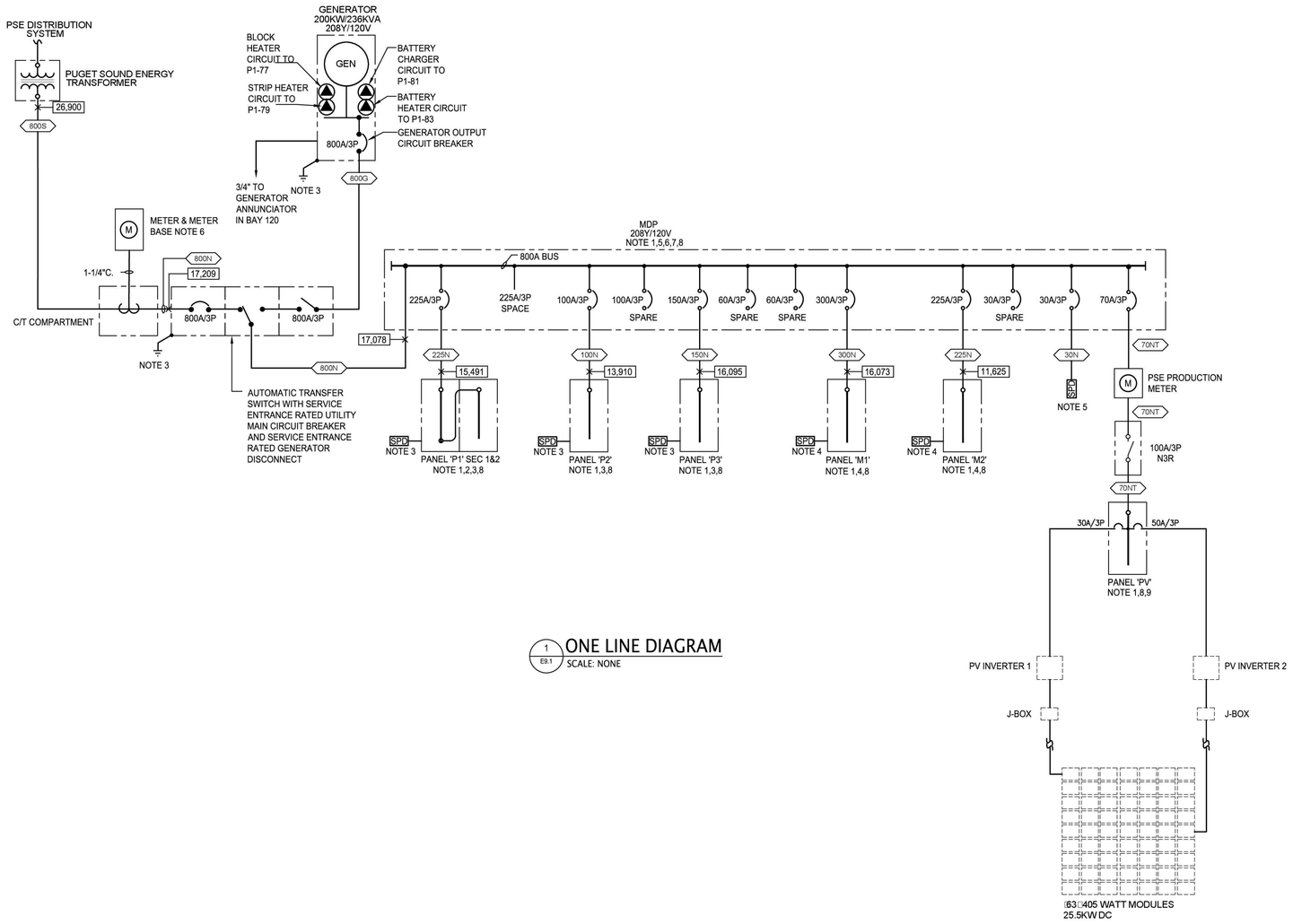

1 E9.1 ONE LINE DIAGRAM
SCALE: NONE

TCA
ARCHITECTURE PLANNING DESIGN
6211 ROOSEVELT WAY NORTHEAST
SEATTLE, WA 98115
tel: (206)522-3830
fax: (206)522-2456

CASE ENGINEERING
ELECTRICAL | LIGHTING | TELECOM | SECURITY
19515 North Creek Parkway, Suite 302
Bothell, WA 98011
425-402-9400 office@caseeng.com
17330

MICHAEL S CASE
STATE OF WASHINGTON
07/21/2020
33273
REGISTERED
PROFESSIONAL ENGINEER

BID SET

No.	Description	Date

Project Title:

FIRE STATION 24
City of Kirkland
Kirkland, Washington

Sheet Title:

ONE LINE DIAGRAM

Scale: NOTED
Project No. : 16-46
Date : July 21, 2020

Sheet Number :

E9.1

Provided to Builders Exchange of WA, Inc. For usage Conditions Agreement see www.bxwa.com - Always Verify Scal

PANEL 'P2'

PROJECT NAME: **Kirkland Fire Station 24** PROJECT #: **17330**

LOCATION: **Kirkland, WA** FED FROM: MDP

NOTE	CKT NO.	CIRCUIT NAME	θ	CB SIZE AMP	P	LOAD (KVA) R	H	M	L	K	O	TOTAL
	1	LTS-CORRIDOR	A	20	1				1.00			1.00
	3	LTS-OFFICE AND SUPPORT	B	20	1				1.00			1.00
1	5	LTS-SLEEPING ROOM	C	20	1				0.50			0.50
	7	LTS-SUPPORT	A	20	1				1.40			1.40
	9	LTS-APPARTUS BAY	B	20	1				0.90			0.90
	11	LTS-APPRATUS BAY	C	20	1				0.90			0.90
	13	LTS-APPRATUS BAY	A	20	1				0.90			0.90
	15	LTS-NIGHT LIGHTING	B	20	1				0.20			0.20
	17	SPARE	C	20	1							
	19	SPACE	A	-	1							
	21	SPACE	B	-	1							
	23	SPACE	C	-	1							
	25	SPACE	A	-	1							
	27	SPACE	B	-	1							
	29	SPACE	C	-	1							
	31	SPACE	A	-	1							
	33	SPACE	B	-	1							
	35	SPACE	C	-	1							
	37	SPACE	A	-	1							
	39	SPACE	B	-	1							
	41	SPACE	C	-	1							
	2	LTS-SITE LIGHTING	A	20	2				0.30			0.30
	4	-	B	-	-				0.30			0.30
	6	LTS-BUILDING MTD	C	20	1				1.20			1.20
	8	LTS-FLAG POLE	A	20	1				0.20			0.20
	10	LTS-SIGNAGE	B	20	1				1.00			1.00
	12	SPARE	C	20	1							
	14	SPARE	A	20	1							
	16	SPARE	B	20	1							
	18	CONTROL RELAY PANEL	C	20	1						0.10	0.10
	20	SPACE	A	-	1							
	22	SPACE	B	-	1							
	24	SPACE	C	-	1							
	26	SPACE	A	-	1							
	28	SPACE	B	-	1							
	30	SPACE	C	-	1							
	32	SPACE	A	-	1							
	34	SPACE	B	-	1							
	36	SPACE	C	-	1							
	38	SPD	A	30	3							
	40	-	B	-	-							
	42	-	C	-	-							

PANEL DESCRIPTION

PANEL AMPS : 100
FEEDER AMPS : 100
L - L VOLTS : 208
L - N VOLTS : 120
PHASE : 3
WIRE : 4

M.L.O. [X]
MAIN CB [ ]
FLUSH [ ]
SURFACE [X]
ISO GND [ ]
FEED-THRU [ ]

LOAD SUMMARY
(TOTAL, ALL SECTIONS)

REC KVA :
HEAT KVA :
MOTOR KVA :
LIGHTING KVA : 9.80
KITCHEN KVA :
OTHER KVA : 0.10

PHASE A KVA : 3.80
AMPS : 32
PHASE B KVA : 3.40
AMPS : 28
PHASE C KVA : 2.70
AMPS : 23

CONNECTED LOAD
KVA : 9.90
AMPS : 27

DEMAND LOAD
KVA : 12.35
AMPS : 34

NOTES/REMARKS :
1. **ARC FAULT INTERRUPTER BKR**
2.
3.

DEMAND / DIVERSITY FACTORS

LOAD	DESCRIPTION	DEMAND		
R	RECEPTACLES - TO 10KVA	100%	=	
	REMAINING OVER 10KVA	50%	=	
H	HEATING	100%	=	
M	MOTORS	100%	=	
LM	LARGEST MOTOR	125%	=	
L	LIGHTING	125%	=	12.25
K	KITCHEN	65%	=	
O	OTHER	100%	=	0.10

LCP RELAY SCHEDULE

LOCATION: ELECTRICAL ROOM
MOUNTING: SURFACE

RELAY	CIRCUIT	SWITCH	LOCATION	ON/OFF TIME	DAYS	NOTES
R1	P2-1	SLV/R1	CORRIDOR	8:00/19:00 12:00/14:00	M,TU,W,TH,F SA, SUN	
R2	P2-9	SLV/R2	APPARTUS BAY	8:00/19:00 12:00/14:00	M,TU,W,TH,F SA, SUN	
R3	P2-11	SLV/R3	APPARTUS BAY	8:00/19:00 12:00/14:00	M,TU,W,TH,F SA, SUN	
R4	P2-13	SLV/R4	APPARTUS BAY	8:00/19:00 12:00/14:00	M,TU,W,TH,F SA, SUN	
R5	P2-15		NIGHT LIGHTS	8:00/19:00 12:00/14:00	M,TU,W,TH,F SA, SUN	
R6	P2-2,4		POLE LIGHTS	8:00/19:00 12:00/14:00	M,TU,W,TH,F SA, SUN	
R7	P2-2,4		POLE LIGHTS	8:00/19:00 12:00/14:00	M,TU,W,TH,F SA, SUN	
R8	P2-6		BUILDING MTD LIGHTING	8:00/19:00 12:00/14:00	M,TU,W,TH,F SA, SUN	
R9	P2-8		FLAG POLE	8:00/19:00 12:00/14:00	M,TU,W,TH,F SA, SUN	
R10	P2-10		SIGNAGE	8:00/19:00 12:00/14:00	M,TU,W,TH,F SA, SUN	
R11				8:00/19:00 12:00/14:00	M,TU,W,TH,F SA, SUN	
R12				8:00/19:00 12:00/14:00	M,TU,W,TH,F SA, SUN	
R13				8:00/19:00 12:00/14:00	M,TU,W,TH,F SA, SUN	
R14				8:00/19:00 12:00/14:00	M,TU,W,TH,F SA, SUN	
R15				8:00/19:00 12:00/14:00	M,TU,W,TH,F SA, SUN	
R16				8:00/19:00 12:00/14:00	M,TU,W,TH,F SA, SUN	
R17				8:00/19:00 12:00/14:00	M,TU,W,TH,F SA, SUN	
R18				8:00/19:00 12:00/14:00	M,TU,W,TH,F SA, SUN	
R19				8:00/19:00 12:00/14:00	M,TU,W,TH,F SA, SUN	
R20				8:00/19:00 12:00/14:00	M,TU,W,TH,F SA, SUN	

NOTES:
1.
2.
3.
4.
5.

PANEL 'P1' SECTION 2

PROJECT NAME: **Kirkland Fire Station 24** PROJECT #: **17330**

LOCATION: **Kirkland, WA** FED FROM: P1 SEC 1

NOTE	CKT NO.	CIRCUIT NAME	θ	CB SIZE AMP	P	LOAD (KVA) R	H	M	L	K	O	TOTAL
	61	REC	A	20	1	0.54						0.54
	63	REC	B	20	1	0.54						0.54
	65	REC - TV	C	20	1						0.30	0.30
	67	EXTERIOR ART	A	20	1					0.10		0.10
	69	KITCHEN INSTAHOT	B	20	1		1.50					1.50
	71	SPARE	C	20	1							
	73	SPARE	A	20	1							
	75	SPARE	B	20	1							
	77	GENERATOR BLOCK HEATER	C	20	1		1.50					1.50
	79	GENERATOR STRIP HEATER	A	20	1		1.50					1.50
	81	GENERATOR BATTERY CHARGER	B	20	1						0.50	0.50
	83	GENERATOR BATTERY HEATER	C	20	1		0.75					0.75
	85	SPARE	A	20	1							
	87	SPARE	B	20	1							
	89	SPARE	C	20	1							
	91	SPARE	A	20	1							
	93	SPARE	B	20	1							
	95	SPARE	C	20	1							
	97	SPACE	A	-	1							
	99	SPACE	B	-	1							
	101	SPACE	C	-	1							
	103	SPACE	A	-	1							
	105	SPACE	B	-	1							
	107	SPACE	C	-	1							
	109	SPACE	A	-	1							
	111	SPACE	B	-	1							
	113	SPACE	C	-	1							
	115	SPACE	A	-	1							
	117	SPACE	B	-	1							
	119	SPACE	C	-	1							
	62	EV CHARGER	A	40	2						3.29	3.29
	64	-	B	-	-						3.29	3.29
	66	FUTURE EV	C	40	2						3.29	3.29
	68	-	A	-	-						3.29	3.29
	70	DOOR HARDWARE POWER SUPPLY	B	20	1						0.40	0.40
	72	SPARE	C	20	1							
	74	SPARE	A	20	1							
	76	SPARE	B	20	1							
	78	SPARE	C	20	1							
	80	SPARE	A	20	1							
	82	SPARE	B	20	1							
	84	SPARE	C	20	1							
	86	SPACE	A	-	1							
	88	SPACE	B	-	1							
	90	SPACE	C	-	1							
	92	SPACE	A	-	1							
	94	SPACE	B	-	1							
	96	SPACE	C	-	1							
	98	SPACE	A	-	1							
	100	SPACE	B	-	1							
	102	SPACE	C	-	1							
	104	SPACE	A	-	1							
	106	SPACE	B	-	1							
	108	SPACE	C	-	1							
	110	SPACE	A	-	1							
	112	SPACE	B	-	1							
	114	SPACE	C	-	1							
	116	SPD	A	30	3							
	118	-	B	-	-							
	120	-	C	-	-							

PANEL DESCRIPTION

PANEL AMPS : 225
FEEDER AMPS : 225
L - L VOLTS : 208
L - N VOLTS : 120
PHASE : 3
WIRE : 4

M.L.O. [X]
MAIN CB [ ]
FLUSH [ ]
SURFACE [X]
ISO GND [ ]
FEED-THRU [ ]

LOAD SUMMARY
(TOTAL, ALL SECTIONS)

REC KVA : 1.1
HEAT KVA : 5.3
MOTOR KVA :
LIGHTING KVA : 0.1
KITCHEN KVA :
OTHER KVA : 14.4

PHASE A KVA : 8.7
AMPS : 72.7
PHASE B KVA : 6.2
AMPS : 51.9
PHASE C KVA : 5.8
AMPS : 48.7

CONNECTED LOAD
KVA : 20.8
AMPS : 57.7

DEMAND LOAD
KVA : 20.8
AMPS : 57.8

NOTES/REMARKS :
1.
2.
3.

DEMAND / DIVERSITY FACTORS

LOAD	DESCRIPTION	DEMAND		
R	RECEPTACLES - TO 10KVA	100%	=	1.1
	REMAINING OVER 10KVA	50%	=	
H	HEATING	100%	=	5.3
M	MOTORS	100%	=	
LM	LARGEST MOTOR	125%	=	
L	LIGHTING	125%	=	0.1
K	KITCHEN	100%	=	
O	OTHER	100%	=	14.4

PANEL 'P1' SECTION 1

PROJECT NAME: **Kirkland Fire Station 24** PROJECT #: **17330**

LOCATION: **Kirkland, WA** FED FROM: MDP

NOTE	CKT NO.	CIRCUIT NAME	θ	CB SIZE AMP	P	LOAD (KVA) R	H	M	L	K	O	TOTAL
1	1	REC - SLEEP ROOMS	A	20	1	0.90						0.90
1	3	REC - SLEEP ROOMS	B	20	1	0.72						0.72
1	5	REC - SLEEP ROOMS	C	20	1	0.72						0.72
1	7	REC - SLEEP ROOMS	A	20	1	0.54						0.54
1	9	REC - SLEEP ROOMS / EXERCISE	B	20	1	0.72						0.72
1	11	REC - SLEEP ROOMS / EXERCISE	C	20	1	0.36						0.36
	13	REC - EXERCISE BIKE	A	20	1						0.50	0.50
	15	REC - EXERCISE BIKE	B	20	1						0.50	0.50
	17	REC - TREADMILL	C	20	1			1.20				1.20
	19	REC - TREADMILL	A	20	1			1.20				1.20
	21	REC	B	20	1	0.90						0.90
	23	FITNESS GARAGE DOOR	C	20	1			1.10				1.10
	25	REC	A	20	1	0.90						0.90
	27	WASHER/DRYER STACK	B	20	1			1.50				1.50
	29	REC - SHOP	C	20	1	0.36						0.36
	31	REC - EMS	A	20	1	0.36						0.36
	33	REC - EMS	B	20	1	0.36						0.36
	35	REC - EXERCISE ROOM TVS	C	20	1						0.50	0.50
	37	SPARE	A	20	1							
	39	SPARE	B	20	1							
	41	SPARE	C	20	1							
	43	SPARE	A	20	1							
	45	SPARE	B	20	1							
	47	SPARE	C	20	1							
	49	SPACE	A	-	1							
	51	SPACE	B	-	1							
	53	SPACE	C	-	1							
	55	SPACE	A	-	1							
	57	SPACE	B	-	1							
	59	SPACE	C	-	1							
	2	SPARE	A	20	1							
	4	SPARE	B	20	1							
	6	SPARE	C	20	1							
	8	IRRIGATION CONTROLLER	A	20	1						0.20	0.20
	10	REC - TOILET/SHOWERS	B	20	1	0.90						0.90
	12	REC - TOILET/SHOWERS	C	20	1	1.08						1.08
1	14	REC - SLEEP ROOMS	A	20	1	0.72						0.72
1	16	REC - SLEEP ROOMS	B	20	1	0.72						0.72
1	18	REC - SLEEP ROOMS	C	20	1	0.72						0.72
1	20	REC - SLEEP ROOMS	A	20	1	0.72						0.72
1	22	REC - SLEEP ROOMS	B	20	1	0.54						0.54
1	24	REC - SLEEP ROOMS	C	20	1	0.54						0.54
	26	LAUNDRY - WASHER	A	20	1			0.80				0.80
	28	LAUNDRY - DRYER	B	20	2		2.50					2.50
	30	-	C	-	-		2.50					2.50
	32	CATV AMPLIFIER	A	20	1						0.20	0.20
	34	LOCUTION RACK	B	20	1						1.00	1.00
	36	LOCUTION RACK	C	20	1						1.00	1.00
	38	NETWORK RACK	A	20	1						1.50	1.50
	40	ACCESS CONTROL POWER SUPPLY	B	20	1	0.18					0.10	0.28
	42	FACP	C	20	1						0.50	0.50
	44	GAS RANGE	A	20	1						0.10	0.10
	46	REC - KITCHEN COUNTER	B	20	1	0.72						0.72
	48	REC - KITCHEN COUNTER	C	20	1	0.72						0.72
	50	DISHWASHER	A	20	1		1.50					1.50
	52	REC - KITCHEN	B	20	1	0.90						0.90
	54	REC - KITCHEN TV	C	20	1						0.30	0.30
	56	REFRIGERATOR	A	20	1			0.80				0.80
	58	REFRIGERATOR	B	20	1			0.80				0.80
	60	REFRIGERATOR	C	20	1			0.80				0.80

PANEL DESCRIPTION

PANEL AMPS : 225
FEEDER AMPS : 225
L - L VOLTS : 208
L - N VOLTS : 120
PHASE : 3
WIRE : 4

M.L.O. [X]
MAIN CB [ ]
FLUSH [ ]
SURFACE [X]
ISO GND [ ]
FEED-THRU [ ]

LOAD SUMMARY
(TOTAL, ALL SECTIONS)

REC KVA : 16.38
HEAT KVA : 11.75
MOTOR KVA : 8.20
LIGHTING KVA : 0.10
KITCHEN KVA :
OTHER KVA : 20.76

PHASE A KVA : 19.66
AMPS : 163.8
PHASE B KVA : 19.29
AMPS : 160.8
PHASE C KVA : 18.24
AMPS : 152.0

CONNECTED LOAD
KVA : 57.19
AMPS : 158.7

DEMAND LOAD
KVA : 54.40
AMPS : 151.0

NOTES/REMARKS :
1. **PROVIDE AFCI BREAKER FOR SLEEP ROOMS**
2.
3.

DEMAND / DIVERSITY FACTORS

LOAD	DESCRIPTION	DEMAND		
R	RECEPTACLES - TO 10KVA	100%	=	10.00
	REMAINING OVER 10KVA	50%	=	3.19
H	HEATING	100%	=	11.75
M	MOTORS	100%	=	6.70
LM	LARGEST MOTOR	125%	=	1.88
L	LIGHTING	125%	=	0.13
K	KITCHEN	100%	=	
O	OTHER	100%	=	20.76

PANEL 'MDP' LOAD SUMMARY

PROJECT NAME: **Kirkland Fire Station 24** PROJECT #: **17330**

LOCATION: **Kirkland, WA** FED FROM:

NOTE	CKT NO.	CIRCUIT NAME	θ		LOAD (KVA) R	H	M	L	K	O	TOTAL
	1	PANEL 'P1'	A	225	3	4.68	3.00	2.80	0.10		9.08	19.66
	-		B	-	-	7.20	4.00	2.30			5.79	19.29
	-		C	-	-	4.50	4.75	3.10			5.89	18.24
	2	PANEL 'P2'	A	100	3						3.80	3.80
	-		B	-	-						3.40	3.40
	-		C	-	-						2.60	2.70
	3	PANEL 'P3'	A	150	3	1.98		9.29			2.40	13.67
	-		B	-	-	1.44		9.29			2.70	13.43
	-		C	-	-	0.54		10.79			2.40	13.73
	4	PANEL 'M1'	A	300	3		5.60	17.03			0.30	22.93
	-		B	-	-	0.18	5.60	15.95			0.17	21.90
	-		C	-	-		7.10	18.49				25.59
	5	PANEL 'M2'	A	225	3		4.92	10.09			0.27	15.28
	-		B	-	-		6.05	10.86			0.07	16.98
	-		C	-	-		6.35	10.13			0.20	16.67
	6		A									
			B									
			C									
	7		A									
			B									
			C									
	8		A									
			B									
			C									
	9		A									
			B									
			C									
	10		A									
			B									
			C									
	11		A									
			B									
			C									
	12		A									
			B									
			C									
	13		A									
			B									
			C									
	14		A									
			B									
			C									

LOAD SUMMARY
(TOTAL, ALL SECTIONS)

REC KVA : 20.52
HEAT KVA : 47.36
MOTOR KVA : 120.13
LIGHTING KVA : 9.90
KITCHEN KVA :
OTHER KVA : 29.37

PHASE A KVA : 75.34
AMPS : 628
PHASE B KVA : 75.00
AMPS : 625
PHASE C KVA : 76.94
AMPS : 641

CONNECTED LOAD
KVA : 227.28
AMPS : 631

DEMAND LOAD
KVA : 229.11
AMPS : 636

NOTES/REMARKS :
1. **THIS IS NOT A PANEL SCHEDULE. LOAD INFO. ONLY.**
2.
3.
4.
5.
6.

LOAD	DESCRIPTION	DEMAND		
R	RECEPTACLES - TO 10KVA	100%	=	10.00
	REMAINING OVER 10KVA	50%	=	5.26
H	HEATING	100%	=	47.36
M	MOTORS	100%	=	101.63
LM	LARGEST MOTOR	125%	=	23.12
L	LIGHTING	125%	=	12.38
K	KITCHEN	65%	=	
O	OTHER	100%	=	29.37

TCA
ARCHITECTURE □ PLANNING □ DESIGN
6211 ROOSEVELT WAY
NORTHEAST
SEATTLE, WA 98115
tel: (206)522-3830
fax: (206)522-2456

CASE ENGINEERING
ELECTRICAL | LIGHTING | TELECOM | SECURITY
19515 North Creek Parkway, Suite 302
Bothell, WA 98011
425-402-9400 office@caseeng.com
17330

MICHAEL S CASE
STATE OF WASHINGTON
07/21/2020
33273
REGISTERED
PROFESSIONAL ENGINEER

BID SET

No.	Description	Date:

Project Title:

FIRE STATION 24
City of Kirkland
Kirkland, Washington

Sheet Title:

PANEL
SCHEDULES

Scale: NOTED
Project No. : 16-46
Date : July 21, 2020

Sheet Number :

E10.1

Provided to Builders Exchange of WA, Inc. For usage Conditions Agreement see www.bxwa.com - Always Verify Scal

PANEL 'M2'

PROJECT NAME: **Kirkland Fire Station 24** PROJECT #: **17330**

LOCATION: **Kirkland, WA** FED FROM: MDP

NOTE	CKT NO.	CIRCUIT NAME	CB SIZE θ	AMP	P	LOAD (KVA) R	H	M	L	K	O	TOTAL	PANEL DESCRIPTION
	1	CM-2	A	30	3			2.76				2.76	PANEL AMPS : 225
	3	-	B	-	-			2.76				2.76	FEEDER AMPS : 225
	5	-	C	-	-			2.76				2.76	L - L VOLTS : 208
	7	CM-3	A	30	3			2.76				2.76	L - N VOLTS : 120
	9	-	B	-	-			2.76				2.76	PHASE : 3
	11	-	C	-	-			2.76				2.76	WIRE : 4
	13	BC-2, BC-3	A	20	2			0.18			0.20	0.38	
	15	-	B	-	-			0.18				0.18	
	17	FC-12, FC-13, FC-14, FC-15	C	20	2			0.08				0.08	
	19	-	A	-	-			0.08			0.07	0.15	M.L.O. [X]
	21	FC-16A, FC-16B	B	20	2			0.13			0.07	0.20	MAIN CB [ ]
	23	-	C	-	-			0.13				0.13	FLUSH [ ]
	25	FC-7, FC-8, FC-9, FC-10, FC-11	A	20	2			0.51				0.51	SURFACE [X]
	27		B	-	-			0.51				0.51	ISO GND [ ]
	29	WH-1	C	20	1		1.80					1.80	FEED-THRU [ ]
	31	CP	A	20	1			0.08				0.08	
	33	BF-1	B	20	1			0.80				0.80	
	35	NEDERMAN CONTROL PANEL	C	20	1						0.20	0.20	
	37	SPARE	A	20	1								
	39	SPARE	B	20	1								
	41	SPARE	C	20	1								
	43	SPACE	A	-	1								
	45	SPACE	B	-	1								
	47	SPACE	C	-	1								
	49	SPACE	A	-	1								
	51	SPACE	B	-	1								
	53	SPACE	C	-	1								
	55	SPACE	A	-	1								LOAD SUMMARY
	57	SPACE	B	-	1								(TOTAL, ALL SECTIONS)
	59	SPACE	C	-	1								
1	2	NF-1	A	50	3			3.72				3.72	REC KVA :
	4	-	B	-	-			3.72				3.72	HEAT KVA : 17.31
	6	-	C	-	-			3.72				3.72	MOTOR KVA : 31.08
	8	RADIANT CEILING PANEL - BUNKER STOR.	A	20	2		0.75					0.75	LIGHTING KVA :
	10	-	B	-	-		0.75					0.75	KITCHEN KVA :
	12	RADIANT CEILING PANEL - BUNKER STOR.	C	20	2		0.75					0.75	OTHER KVA : 0.54
	14	-	A	-	-		0.75					0.75	
	16	RADIANT CEILING PANEL - DECON	B	20	2		1.13					1.13	PHASE A KVA : 15.28
	18	-	C	-	-		1.13					1.13	AMPS : 127
	20	EWH-1 BAY TOILET	A	20	1		0.75					0.75	PHASE B KVA : 16.98
	22	EWH-2 ALCOVE	B	20	1		1.50					1.50	AMPS : 141
	24	CF-3	C	20	1			0.68				0.68	PHASE C KVA : 16.67
	26	SPARE	A	40	3								AMPS : 139
	28	-	B	-	-								
	30	-	C	-	-								
	32	SPARE	A	45	2								
	34	-	B	-	-								
	36	SPACE	C	-	1								
	38	DH-2	A	30	3		2.67					2.67	
	40	-	B	-	-		2.67					2.67	
	42	-	C	-	-		2.67					2.67	
	44	SPARE	A	20	1								
	46	SPARE	B	20	1								
	48	SPARE	C	20	1								
	50	SPACE	A	-	1								CONNECTED LOAD
	52	SPACE	B	-	1								KVA : 48.93
	54	SPACE	C	-	1								AMPS : 136
	56	SPD	A	30	3								DEMAND LOAD
	58	-	B	-	-								KVA : 51.72
	60	-	C	-	-								AMPS : 144

NOTES/REMARKS :

1. **CIRCUITED VIA NEDERMAN CONTROL PANEL. SEE FLAG NOTE 4, SHEET E4.1. PROVIDE BREAKER LOCKOUT DEVICE.**

DEMAND / DIVERSITY FACTORS

LOAD	DESCRIPTION	DEMAND		
R	RECEPTACLES - TO 10KVA	100%	=	
	REMAINING OVER 10KVA	50%	=	
H	HEATING	100%	=	17.31
M	MOTORS	100%	=	19.92
LM	LARGEST MOTOR	125%	=	13.95
L	LIGHTING	125%	=	
K	KITCHEN	65%	=	
O	OTHER	100%	=	0.54

PANEL 'M1'

PROJECT NAME: **Kirkland Fire Station 24** PROJECT #: **17330**

LOCATION: **Kirkland, WA** FED FROM: MDP

NOTE	CKT NO.	CIRCUIT NAME	CB SIZE θ	AMP	P	LOAD (KVA) R	H	M	L	K	O	TOTAL	PANEL DESCRIPTION
	1	FC-1, FC-2, FC-3, FC-4, FC-5, FC-6	A	20	2			0.85				0.85	PANEL AMPS : 400
	3	-	B	-	-			0.85				0.85	FEEDER AMPS : 300
	5	MUA	C	20	1			1.23				1.23	L - L VOLTS : 208
	7	DH-1	A	60	3		5.00					5.00	L - N VOLTS : 120
	9	-	B	-	-		5.00					5.00	PHASE : 3
	11	-	C	-	-		5.00					5.00	WIRE : 4
	13	HOOD	A	20	1						0.20	0.20	
	15	L-2	B	20	1			0.05				0.05	
	17	EWH-2 - AIRLOCK 109	C	20	1		1.50					1.50	
	19	BC-1	A	20	2						0.07	0.07	M.L.O. [X]
	21	-	B	-	-						0.07	0.07	MAIN CB [ ]
	23	IH-1	C	20	1		0.60					0.60	FLUSH [ ]
	25	IH-2	A	20	1		0.60					0.60	SURFACE [X]
	27	IH-3	B	20	1		0.60					0.60	ISO GND [ ]
	29	CF-1	C	20	1			0.67				0.67	FEED-THRU [ ]
	31	CF-2	A	20	1			0.67				0.67	
	33	L-1, NO/CO2 SENSORS	B	20	1			0.05			0.10	0.15	
	35	SPARE	C	20	1								
	37	VRF CONTROLLER	A	20	1						0.04	0.04	
	39	SPARE	B	20	1								
	41	SPARE	C	20	1								
	43	SPACE	A	-	1								
	45	SPACE	B	-	1								
	47	SPACE	C	-	1								
	49	SPACE	A	-	1								
	51	SPACE	B	-	1								
	53	SPACE	C	-	1								
	55	SPACE	A	-	1								LOAD SUMMARY
	57	SPACE	B	-	1								(TOTAL, ALL SECTIONS)
	59	SPACE	C	-	1								
	2	EF-1	A	15	3			0.69				0.69	REC KVA : 0.18
	4	-	B	-	-			0.69				0.69	HEAT KVA : 18.30
	6	-	C	-	-			0.69				0.69	MOTOR KVA : 51.47
	8	EF-2	A	20	1			0.51				0.51	LIGHTING KVA :
	10	REC - ROOFTOP	B	20	1	0.18						0.18	KITCHEN KVA :
	12	KEF	C	20	1			1.59				1.59	OTHER KVA : 0.47
	14	CM-1	A	45	3			3.72				3.72	
	16	-	B	-	-			3.72				3.72	PHASE A KVA : 22.93
	18	-	C	-	-			3.72				3.72	AMPS : 191
	20	ERV-2	A	45	3			4.93				4.93	PHASE B KVA : 21.90
	22	-	B	-	-			4.93				4.93	AMPS : 183
	24	-	C	-	-			4.93				4.93	PHASE C KVA : 25.59
	26	ERV-1	A	50	3			5.66				5.66	AMPS : 213
	28	-	B	-	-			5.66				5.66	
	30	-	C	-	-			5.66				5.66	
	32	SPACE	A	-	1								
	34	SPACE	B	-	1								
	36	SPACE	C	-	1								
	38	SPARE	A	20	1								
	40	SPARE	B	20	1								
	42	SPARE	C	20	1								
	44	SPACE	A	-	1								
	46	SPACE	B	-	1								
	48	SPACE	C	-	1								
	50	SPACE	A	-	1								CONNECTED LOAD
	52	SPACE	B	-	1								KVA : 70.43
	54	SPACE	C	-	1								AMPS : 195
	56	SPD	A	30	3								DEMAND LOAD
	58	-	B	-	-								KVA : 74.67
	60	-	C	-	-								AMPS : 207

NOTES/REMARKS :

1.
2.
3.

DEMAND / DIVERSITY FACTORS

LOAD	DESCRIPTION	DEMAND		
R	RECEPTACLES - TO 10KVA	100%	=	0.18
	REMAINING OVER 10KVA	50%	=	
H	HEATING	100%	=	18.30
M	MOTORS	100%	=	34.48
LM	LARGEST MOTOR	125%	=	21.24
L	LIGHTING	125%	=	
K	KITCHEN	65%	=	
O	OTHER	100%	=	0.47

PANEL 'P3'

PROJECT NAME: **Kirkland Fire Station 24** PROJECT #: **17330**

LOCATION: **Kirkland, WA** FED FROM: MDP

NOTE	CKT NO.	CIRCUIT NAME	CB SIZE θ	AMP	P	LOAD (KVA) R	H	M	L	K	O	TOTAL	PANEL DESCRIPTION
	1	REC - SHOP / APP BAY	A	20	1	0.54						0.54	PANEL AMPS : 400
	3	REC - SHOP / APP BAY	B	20	1	0.72						0.72	FEEDER AMPS : 300
	5	BUNKER GEAR DRYER	C	20	1			1.50				1.50	L - L VOLTS : 208
	7	SPARE	A	20	1								L - N VOLTS : 120
	9	SPARE	B	20	1								PHASE : 3
	11	NORTH ROLL-UP DOOR OPERATOR	C	20	1			1.59				1.59	WIRE : 4
	13	NORTH ROLL-UP DOOR OPERATOR	A	20	1			1.59				1.59	
	15	NORTH ROLL-UP DOOR OPERATOR	B	20	1			1.59				1.59	
	17	NORTH CORD DROP	C	20	1						1.20	1.20	
	19	NORTH CORD DROP	A	20	1						1.20	1.20	M.L.O. [X]
	21	NORTH CORD DROP	B	20	1						1.20	1.20	MAIN CB [ ]
	23	SOUTH CORD DROP	C	20	1						1.20	1.20	FLUSH [ ]
	25	SOUTH CORD DROP	A	20	1						1.20	1.20	SURFACE [X]
	27	SOUTH CORD DROP	B	20	1						1.20	1.20	ISO GND [ ]
	29		C	20	1								FEED-THRU [ ]
	31	EXTRACTOR	A	40	3			3.80				3.80	
	33	-	B	-	-			3.80				3.80	
	35	-	C	-	-			3.80				3.80	
	37	SPARE	A	20	1								
	39	SPARE	B	20	1								
	41	SPARE	C	20	1								
	43	SPACE	A	-	1								
	45	SPACE	B	-	1								
	47	SPACE	C	-	1								
	49	SPACE	A	-	1								
	51	SPACE	B	-	1								
	53	SPACE	C	-	1								
	55	SPACE	A	-	1								LOAD SUMMARY
	57	SPACE	B	-	1								(TOTAL, ALL SECTIONS)
	59	SPACE	C	-	1								
	2	SOUTH BI-FOLD DOOR CONTROLLER	A	20	3			1.30				1.30	REC KVA : 3.96
	4	-	B	-	-			1.30				1.30	HEAT KVA :
	6	-	C	-	-			1.30				1.30	MOTOR KVA : 29.37
	8	SOUTH BI-FOLD DOOR CONTROLLER	A	20	3			1.30				1.30	LIGHTING KVA :
	10	-	B	-	-			1.30				1.30	KITCHEN KVA :
	12	-	C	-	-			1.30				1.30	OTHER KVA : 7.50
	14	SOUTH BI-FOLD DOOR CONTROLLER	A	20	3			1.30				1.30	
	16	-	B	-	-			1.30				1.30	PHASE A KVA : 13.67
	18	-	C	-	-			1.30				1.30	AMPS : 114
	20	REC - APPARATUS BAY	A	20	1	0.72						0.72	PHASE B KVA : 13.43
	22	REC - APPARATUS BAY	B	20	1	0.72						0.72	AMPS : 112
	24	REC - APPARATUS BAY	C	20	1	0.54						0.54	PHASE C KVA : 13.73
	26	REC - APPARATUS BAY ROOF	A	20	1	0.72						0.72	AMPS : 114
	28	DOOR HARDWARE POWER SUPPLY	B	20	1						0.30	0.30	
	30	SPARE	C	20	1								
	32	SPACE	A	-	1								
	34	SPACE	B	-	1								
	36	SPACE	C	-	1								
	38	SPARE	A	20	1								
	40	SPARE	B	20	1								
	42	SPARE	C	20	1								
	44	SPACE	A	-	1								
	46	SPACE	B	-	1								
	48	SPACE	C	-	1								
	50	SPACE	A	-	1								CONNECTED LOAD
	52	SPACE	B	-	1								KVA : 40.83
	54	SPACE	C	-	1								AMPS : 113
	56	SPD	A	30	3								DEMAND LOAD
	58	-	B	-	-								KVA : 43.68
	60	-	C	-	-								AMPS : 121

NOTES/REMARKS :

1.
2.
3.

DEMAND / DIVERSITY FACTORS

LOAD	DESCRIPTION	DEMAND		
R	RECEPTACLES - TO 10KVA	100%	=	3.96
	REMAINING OVER 10KVA	50%	=	
H	HEATING	100%	=	
M	MOTORS	100%	=	17.97
LM	LARGEST MOTOR	125%	=	14.25
L	LIGHTING	125%	=	
K	KITCHEN	65%	=	
O	OTHER	100%	=	7.50

TCA
ARCHITECTURE □ PLANNING □ DESIGN
6211 ROOSEVELT WAY
NORTHEAST
SEATTLE, WA 98115
tel: (206) 522-3830
fax: (206) 522-2456

CASE ENGINEERING
ELECTRICAL | LIGHTING | TELECOM | SECURITY
19515 North Creek Parkway, Suite 302
Bothell, WA 98011
425-402-9400 office@caseeng.com
17330

MICHAEL S CASE
STATE OF WASHINGTON
07/21/2020
33273
REGISTERED
PROFESSIONAL ENGINEER

BID SET

No.	Description	Date:

Project Title:

FIRE STATION 24
City of Kirkland
Kirkland, Washington

Sheet Title:

PANEL
SCHEDULES

Scale: NOTED
Project No. : 16-46
Date : July 21, 2020

Sheet Number :

E10.2

Provided to Builders Exchange of WA, Inc. For usage Conditions Agreement see www.bxwa.com - Always Verify Scal

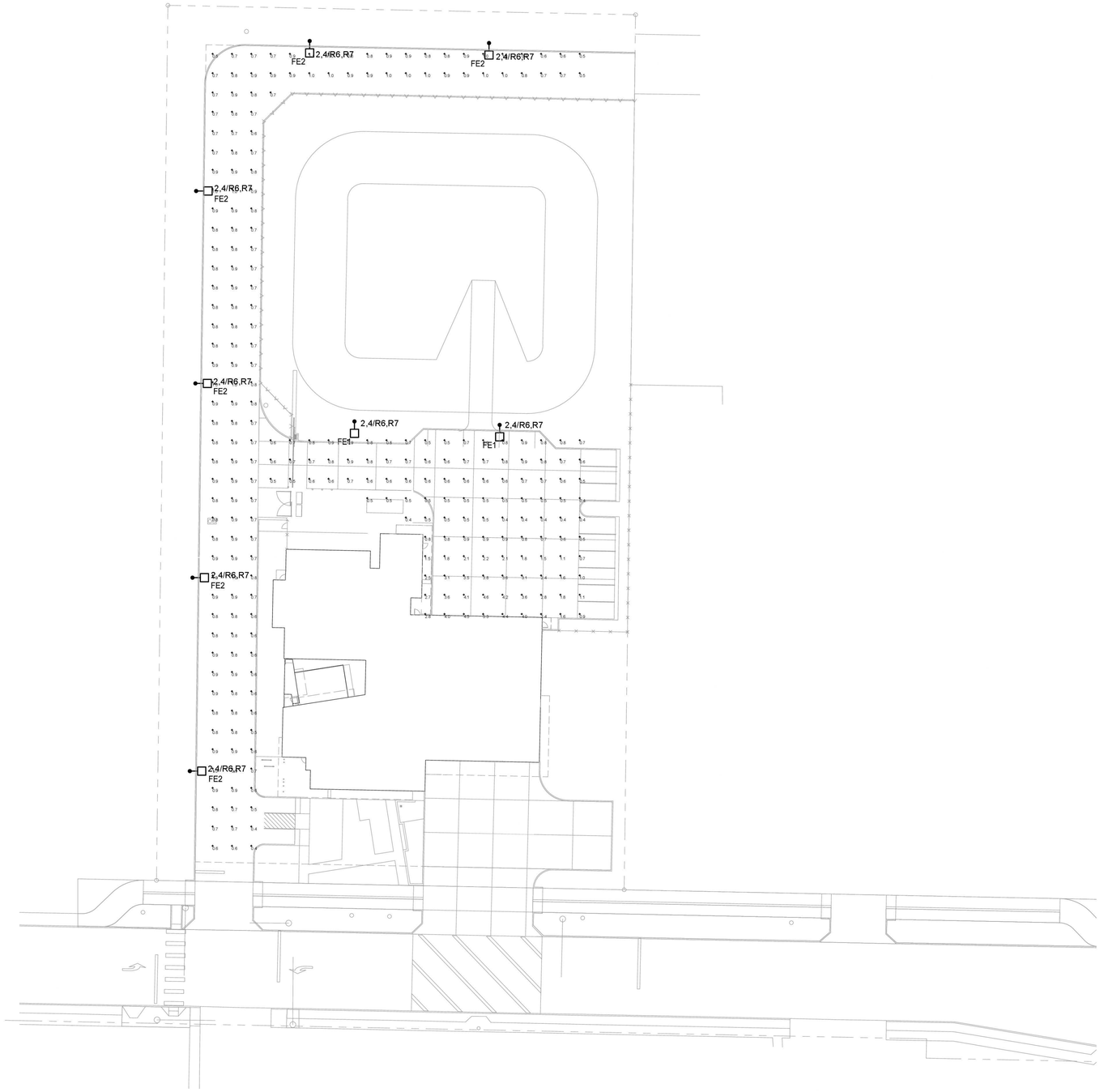

SITE LIGHTING CALCULATION PLAN

SCALE: 1" = 30'0"

Calculation Su□ □ary							
La□el	CalcTy□e	Units	Avg	Max	Min	Avg/Min	Max/Min
PARKING AND DRIVE	Illu□inance	Fc	1.00	5.3	0.4	2.50	13.25

TCA
ARCHITECTURE □ PLANNING □ DESIGN
6211 ROOSEVELT WAY
NORTHEAST
SEATTLE, WA 98115
tel: □206□522-3830
□ax: □206□522-2456

CASE ENGINEERING
ELECTRICAL | LIGHTING | TELECOM | SECURITY
19515 North Creek Parkway, Suite 302
Bothell, WA 98011
425-402-9400 office@caseeng.com
17330

MICHAEL S CASE
STATE OF WASHINGTON
07/21/2020
33273
REGISTERED
PROFESSIONAL ENGINEER

BID SET

No.	Descri□tion	Date:

Project Title:

FIRE STATION 24
City of Kirkland
Kirkland, Washington

Sheet Title:

SITE LIGHTING
CALCULATION PLAN

Scale: NOTED
Project No. : 16-46
Date : July 21, 2020

Sheet Number :

EL1.2

Provided to Builders Exchange of WA, Inc. For usage Conditions Agreement see www.bxwa.com - Always Verify Scal

EMERGENCY LIGHTING CALCULATION

SCALE: 1/8" = 1'0"

Provided to Builders Exchange of WA, Inc. For usage Conditions Agreement see www.bxwa.com - Always Verify Scal

TCA
ARCHITECTURE □ PLANNING □ DESIGN
6211 ROOSEVELT WAY
NORTHEAST
SEATTLE, WA 98115
tel: (206) 522-3830
fax: (206) 522-2456

CASE ENGINEERING
ELECTRICAL | LIGHTING | TELECOM | SECURITY
19515 North Creek Parkway, Suite 302
Bothell, WA 98011
425-402-9400 office@caseeng.com
17330

MICHAEL S CASE
STATE OF WASHINGTON
07/21/2020
33273
REGISTERED
PROFESSIONAL ENGINEER

BID SET

No.	Description	Date:

Project Title:

FIRE STATION 24
City of Kirkland
Kirkland, Washington

Sheet Title:

EMERGENCY LIGHTING
CALCULATION PLAN

Scale: NOTED
Project No. : 16-46
Date : July 21, 2020

Sheet Number :

EL3.1