City of Kirkland
Totem Lake Park Phase 1

PKC1390200
JOB NO. 00-00-PW
BID SET
September 13, 2019

Sheet Index

Sheet Number	Sheet Name	Designed By
G000	COVER	Landscape
G001	LANDSCAPE GENERAL NOTES & SCHEDULES	Landscape
G002	PROJECT LIMITS - OVERALL	Landscape
G003	PROJECT LIMITS - BOARDWALK	Landscape
ET101	EXISTING TREE PLAN - PARK	Landscape
ET102	EXISTING TREE PLAN - TRAIL	Landscape
ET103	EXISTING TREE PLAN - BOARDWALK	Landscape
C001	CIVIL GENERAL NOTES	Civil
C002	CIVIL GENERAL NOTES	Civil
C101	SITE PREPARATION PLAN - PARK	Civil
C102	SITE PREPARATION PLAN - TRAIL	Civil
C103	SITE PREPARATION PLAN - BOARDWALK	Civil
BD100	BUILDING DEMOLITION	Architect
C201	CESC PLAN - PARK	Civil
C202	CESC PLAN - TRAIL	Civil
C203	CESC PLAN - BOARDWALK	Civil
C301	UTILITY PLAN - PARK	Civil
C401	DRAINAGE PLAN - PARK	Civil
C402	DRAINAGE PLAN - TRAIL	Civil
CD101	DRAINAGE DETAILS - PARK	Civil
CD102	CIVIL PAVING DETAILS	Civil
CD103	DRAINAGE SECTIONS - PARK	Civil
CG101	GRADING & PAVING PLAN - PARK	Civil
CG102	GRADING & PAVING PLAN - TRAIL	Civil
CG103	GRADING & PAVING PLAN - BOARDWALK	Civil
CG201	GRADING PLAN - PARK - ENLARGEMENT	Civil
L101	SITE PLAN - PARK	Landscape
L102	SITE PLAN - TRAIL	Landscape
L103	SITE PLAN - BOARDWALK	Landscape
L200	BOARDWALK ELEVATIONS	Landscape
L201	BOARDWALK ELEVATIONS	Landscape
L202	PARK ELEVATIONS	Landscape
L400	PLAY AREA ENLARGEMENTS	Landscape
L401	LANDSCAPE ENLARGEMENTS	Landscape
L402	PLAY AREA ENLARGEMENTS	Landscape
L403	PAVING JOINTING & PATTERN DETAIL PLAN	Landscape
LD101	LANDSCAPE PAVING DETAILS	Landscape
LD102	PLAY AREA DETAILS	Landscape
LD103	STAIR & RAILING DETAILS	Landscape
LD104	WALL & FENCE DETAILS	Landscape
LD105	TRAIL TYPICAL DETAIL	Landscape
LD106	OVERLOOK DETAILS	Landscape
LD107	GEOTECHNICAL WALL DETAIL	Geotechnical
LD200	METAL GUARDRAIL DETAILS	Landscape
LD201	METAL GUARDRAIL DETAILS	Landscape
LD202	METAL GUARDRAIL DETAILS	Landscape
LD203	METAL GUARDRAIL @ BOARDWALK OVERLOOK	Landscape
SS001	GENERAL STRUCTURAL NOTES	Site Structural
SS002	GENERAL STRUCTURAL NOTES	Site Structural
SS003	STATEMENT OF SPECIAL INSPECTIONS	Site Structural
SS100	STRUCTURAL SHEET LAYOUT	Site Structural
SS101	PARK PLAN	Site Structural
SS102	TRAIL PLAN	Site Structural
SS103	BOARDWALK PLAN	Site Structural
SSD101	DETAILS	Site Structural
SSD102	DETAILS	Site Structural
S001	STRUCTURAL NOTES	Building Structural

Sheet Index

Sheet Number	Sheet Name	Designed By
S002	STRUCTURAL NOTES	Building Structural
S003	STRUCTURAL NOTES	Building Structural
S101	FOUNDATION PLAN	Building Structural
S201	ROOF FRAMING PLAN	Building Structural
SD100	DETAILS	Building Structural
SD101	DETAILS	Building Structural
SD102	DETAILS	Building Structural
A000	ABBREVIATIONS & SYMBOLS	Architect
A001	SCHEDULES, DOOR & FRAME TYPES	Architect
A100	SLAB/CURB PLAN	Architect
A101	BUILDING PLAN	Architect
A102	UPPER WALL PLAN	Architect
A103	ROOF PLAN	Architect
A301	REFLECTED CEILING PLAN	Architect
A401	EXTERIOR ELEVATIONS I	Architect
A402	EXTERIOR ELEVATIONS II	Architect
A403	PERSPECTIVES	Architect
AD100	ENLARGED PLANS	Architect
AD101	INTERIOR ELEVATIONS	Architect
AD102	BUILDING SECTION I	Architect
AD103	BUILDING SECTION II	Architect
AD104	SLOPED COLUMNS SECTIONS	Architect
AD105	WALL SECTIONS	Architect
AD106	WALL DETAILS	Architect
AD107	ROOF DETAILS	Architect
M001	MECHANICAL GENERAL INFORMATION	Mechanical
M002	SCHEDULES	Mechanical
M101	BUILDING MECHANICAL PLANS	Mechanical
M201	PLUMBING DIAGRAM	Mechanical
M301	SECTIONS AND ELEVATIONS	Mechanical
MD101	DETAILS	Mechanical
E001	SYMBOLS LIST & ABBREVIATIONS	Electrical
E002	WSEC COMPLIANCE FORMS	Electrical
E003	WSEC COMPLIANCE FORMS	Electrical
E004	WSEC COMPLIANCE FORMS	Electrical
E101	ELECTRICAL SITE PLAN	Electrical
E201	ENLARGED BUILDING PLANS	Electrical
E301	ONE-LINE DIAGRAM AND SCHEDULES	Electrical
ED100	DETAILS	Electrical
IR001	IRRIGATION NOTES & SCHEDULE	Irrigation
IR101	IRRIGATION PLAN - PARK	Irrigation
IR102	IRRIGATION PLAN - TRAIL	Irrigation
IR103	IRRIGATION PLAN - BOARDWALK	Irrigation
IR104	IRRIGATION PLAN - BOARDWALK	Irrigation
ID100	IRRIGATION DETAILS	Irrigation
ID101	IRRIGATION DETAILS	Irrigation
LP001	OVERALL PLANTING & MITIGATION PLAN	Designer
LP101	PLANTING PLAN - PARK	Landscape
LP102	PLANTING PLAN - TRAIL	Landscape
LP103	PLANTING PLAN - BOARDWALK	Landscape
LD300	PLANTING DETAILS	Landscape
LD301	PLANTING DETAILS	Landscape

Grand total: 109

CITY OFFICIALS

Penny Sweet	Mayor
Jay Arnold	Deputy Mayor
Tom Neir	Council Member
Toby Nixon	Council Member
Kelly Curtis	Council Member
Dave Asher	Council Member
Jon Pascal	Council Member
Kurt Triplett	City Manager
Kathy Brown	Public Works Director
Rod Steizer, P.E.	Capital Projects Manager

CONTACT PERSONNEL

NAME	ORGANIZATION	PHONE
Brian Baker	COK Project Manager	425.587.3874
Nathan Hower	COK Streets Department	425.587.3909
Jason Osborn	COK Storm Drainage Department	425.587.3901
Tom Chriest	COK Water Department	425.587.3910
Dispatch	COK Police Department	425.587.3400
Dispatch	COK Fire Department	425.864.3650
Dispatch	COK Spill Response Hotline	425.587.3900
Jay Schwab	Frontier Communications (Telephone & FIOS)	425.263.4019
Jeanne Coleman	Puget Sound Energy (Electric & Gas)	425.449.7410
Raymond Pilkenton	Comcast (Cable Television)	206.263.5332
Const. Coordinator	Kind County Metro	206.477.1140
		206.477.0438

Team Contact Info

Prime Consultant:

Berger Partnership - Landscape Architecture
Primary: Matt Martenson
Phone: 206-492-5560
Email: mattm@bergerpartnership.com
Secondary: Andy Mitton
Phone: 206-492-5562
Email: andym@bergerpartnership.com

Subconsultant Team

CH2M Hill - Civil Engineering
Primary:Jesse Williams
Email: jesse.williams@ch2m.com

Swenson Say Faget - Site Structural Engineering
Primary: Gregory Juttner
Email: gjuttner@ssfengineers.com

ESA - Environmental
Primary: Jessica Redman
Email: jredman@esassoc.com

KPFF - Survey
Primary: Jereme Chapman
Email: jereme.chapman@kpff.com

Symbiosis Tree Care: Arborist
Primary: Kurt Fickeisen
Email: kurtfick@gmail.com

Hood River Engineers - Mechanical and Plumbing:
Primary: Jesse Barksdale
Email: jesse@enginuitysys.com

Innova Architects: Architecture and Building Structural
Primary: Scott Saladis
Email: ssaladis@innovaarchitects.com

NAC Architecture: Electrical Engineering
Primary: Mark McMicheal
Email: mmcmicheal@nacarchitecture.com

Design 2426: Irrigation
Primary: Jason Anderson
Email: jasona@design2426.com

Vicinity Map

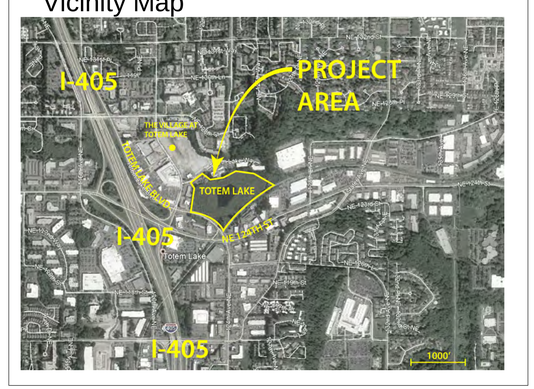

Applicable Codes:

Compliance with the following codes shall be required:

Accessibility	2010 Americans with Disabilities (ADA) Standards for Accessible Design
Building	2015 International Building Code (IBC)
Electrical	2017 National Electrical Code
Energy Efficiency	2015 Washington State Energy Code (WSEC)
Fire	2015 International Fire Code with Washington Amendments
Mechanical	2015 Washington State Energy Code (WSEC)
Plumbing	2015 Uniform Plumbing Code

Drawing Set Printing and Reproduction Notes/Req's:

1. DRAWING SET SHEET SIZE IS 22" X 34".
2. DRAWING SET UTILIZES COLORED INFORMATION AND SHALL BE PRINTED AND REPRODUCED IN COLOR.

City/Owner Contact Info

City of Kirkland:
Project Manager: Brian Baker
Phone: 425-587-3874
Email: bbaker@kirklandwa.gov

PARTNERSHIP berger
1927 Post Alley, Ste. 2
Seattle, WA 98101
206 325 6877
berger@partnership.com

Totem Lake Park Phase 1
City of Kirkland
12031 Totem Lake Way, Kirkland, WA 98034

STATE OF WASHINGTON
ANDY MITTON
NO. 882 EXP. 6/30/2020
LANDSCAPE ARCHITECT

SET TYPE:
Bid Set

SET ISSUE DATE:
09/13/2019

REVISIONS:

Δ	DESCRIPTION	DATE

DRAWN/CHECKED:
MM / AM

SHEET NAME:
COVER

SHEET NUMBER:
G000

Plotted: 12/2/2019 3:57:56 PM Filename: G:\Everyone\Christine Abbott\Revit Local\Totem Lake Park-PH1_christinea@bergerpartnership.com.rvt Berger Partnership Project Number: 2015475.02

PROJECT GENERAL NOTES	
Note #	Desription
1	ALL WORK EAST OF 'PARK SITE' ON 'TRAIL' AND 'BOARDWALK' SHEETS OCCURS IN EASEMENT AREAS. COORDINATE EXECUTION OF ALL WORK IN THIS AREA WITH OWNER. REFER TO SPECIFICATIONS.
2	SURVEY DATA LONG NORTH EDGE OF 'TRAIL' IS LIMITED. REFER TO SIGNED SURVEY INCLUDED WITH PROJECT MANUAL FOR EXTENT OF SURVEY.
3	SURVEY DATA LONG BOARDWALK ALIGNMENT IS LIMITED. REFER TO SIGNED SURVEY INCLUDED WITH PROJECT MANUAL FOR EXTENT OF SURVEY.
4	NO TEMPORARY OR PERMANENT CUT OR FILL ACTIVITIES SHALL BE ALLOWED WITHIN THE WETLAND. PILES ASSOCIATED WITH BOARDWALK CONSTRUCTION SHALL NOT BE COUNTED AS FILL.
5	IT ANTICIPATED THAT THE WETLAND BOARDWALK WILL BE CONSTRUCTED FROM TEMPORARY FLOATING PLATFORMS. THE CONTRACTOR SHALL SUBMIT WORK PLAN FOR BOARDWALK CONSTRUCTION PRIOR TO CONSTRUCTION.
6	PROJECT INCLUDES OFF SITE MITIGATION. REFER TO CRITICAL AREAS PLAN AND MITIGATION PLANS INCLUDED WITH CRITICAL AREAS PLAN FOR OFF SITE MITIGATION.
7	REFER TO LANDSCAPE PLANS FOR ALL WALL ELEVATION INFORMATION, INCLUDING TW ELEVATIONS.
8	REFER TO CIVIL DRAWINGS FOR ALL HORIZONTAL AND VERTICAL CONTROL, INCLUDING PAVING ELEVATION INFORMATION.

ABBREVIATIONS	
ABBREVIATION	DESCRIPTION
ALUM	ALUMINUM
ARCH	ARCHITECT
AVAIL	AVAILABLE
BAR	REBAR
BOT	BOTTOM
BS	BOTTOM OF STAIR
BW	BOTTOM OF WALL
C.I.P.	CAST IN PLACE
CI	CUBIC INCH
CIVIL	CIVIL ENGINEER
CJ	CONTROL JOINT
CLR	CLEAR
CNTRD	CENTERED
CONC	CONCRETE
CONT	CONTINUE(S)
CY	CUBIC YARD
DI	DUCTILE IRON
DIA	DIAMETER
E	EASTING
EA	EACH
EJ	EXPANSION JOINT
ELEC	ELECTRICAL ENGINEER
ELEV	ELEVATION
EMBED	EMBEDMENT
EQ	EQUAL(S)
EX	EXISTING
FF	FACE FEET
FG	FINISH GRADE ELEVATION
GA	GAUGE
GAL	GALLON
GALV	GALVANIZED
GEOTECH	GEOTECHNICAL ENGINEER
HORIZ	HORIZONTAL

ABBREVIATIONS	
ABBREVIATION	DESCRIPTION
HT	HEIGHT
L. ARCH	LANDSCAPE ARCH
LF	LINEAL OR LINEAR FEET
MAX	MAXIMUM
MECH	MECHANICAL ENGINEER
MFG	MANUFACTURER
MIN	MINIMUM
N	NORTHING
O.C.	ON CENTER
PERF	PERFORATED
PJ	PATTERN JOINT/LINE
PL	PROPERTY LINE
PT	PRESSURE TREATED
R	RADIUS
SD	STORM DRAIN(AGE)
SF	SQUARE FEET
SPA	SPACING
SPECS	SPECIFICATIONS
SS	SANITARY SEWER
SSTL	STAINLESS STEEL
STL	STEEL
STRUCT	STRUCTURAL ENGINEER
SY	SQUARE YARD
TAN	TANGENT
TF	TOP OF FOOTING ELEVATION
TS	TOP OF STAIR
TW	TOP OF WALL ELEVATION
TYP	TYPICAL
VERT	VERTICAL
VOL	VOLUME
W/	WITH
Z	ELEVATION

ALIGNMENT SCHEDULE	
Name	Alignment Description
BL	BOARDWALK LAYOUT CENTERLINE
PL	PARK PATHWAY CENTERLINE
SL	STREET CENTERLINE
TL	TRAIL EDGE LINE
T	TRAIL CENTERLINE

SITE SEATING AND TABLE SCHEDULE		
Type	Count	Comments
Concrete Seating	11	Refer to Detail. Length varies.
Picnic Table	4	Refer to Detail.
Vaya Bench	1	Refer to Specs.
Vaya Chair	10	Refer to Specs.
Vaya Table	3	Refer to Specs.

SITE BIKE RACK AND LITTER BIN SCHEDULE		
Type	Count	Comments
Flo-Bike-Rack	3	Refer to Specs.
Litter Bin	4	Refer to Specs.

RAILING AND FENCE SCHEDULE		
Type	Length	Comments
Chain Link Fence	214	Refer to details.
Guard rail - Metal panel	32	Refer to details. Length does not include corner panels.
Guardrail - Metal panel	1269	Refer to details. Length does not include corner panels.
Wood Fence	428	Refer to details.
Wood Guardrail	1010	Refer to details.

PAVING SCHEDULE		
Type	Area	Comments
ASPHALT PAVING	14941 SF	Includes vehicular and pedestrian paving.
BOARDWALK	6594 SF	Includes putruded grating and metal bar grating.
CONCRETE PAVING	9702 SF	
SYNTHETIC TURF	6345 SF	
WOOD BOARDWALK	1300 SF	Decking and deck framing only. Assumes reuse of existing piles.
	38883 SF	

ROCKERY WALL FF TAKEOFFS		
Material: Name	Face Foot Area	Comments
Rockery Face @ 'Boardwalk' Site (near CKC)	386 SF	Represents exposed (visible) face foot only.
Rockery Face @ 'Park' Site	680 SF	
Rockery Face @ 'Trail' Site	2147 SF	
	3214 SF	

PARTNERSHIP berger
1927 Post Alley, Ste. 2
Seattle, WA 98101
206.325.6977
bergerpartnership.com

Totem Lake Park Phase 1

City of Kirkland

12031 Totem Lake Way, Kirkland, WA 98034

STATE OF WASHINGTON
ANDY MITTON
NO. 882 EXP. 6/30/2020
LANDSCAPE ARCHITECT

SET TYPE:
Bid Set

SET ISSUE DATE:
09/13/2019

REVISIONS:

Δ	DESCRIPTION	DATE

DRAWN/CHECKED:
MM / AM

SHEET NAME:
LANDSCAPE GENERAL NOTES & SCHEDULES

SHEET NUMBER:
G001

Berger Partnership Project Number: 20154875.02 Plotted: 11/25/2019 1:12:16 PM Filename: G:\Everyone\Christine Abbott\Revit Local\Totem Lake Park-PH1_christinea@bergerpartnership.com.rvt

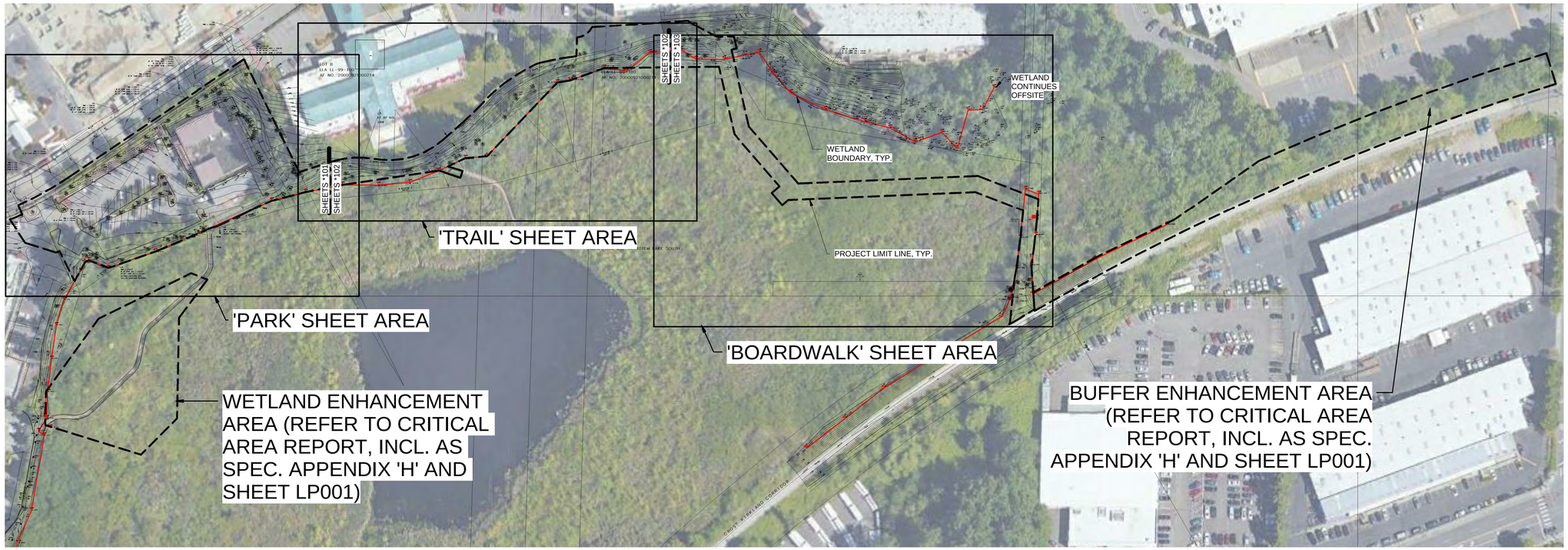

1 OVERALL PROJECT LIMITS
1" = 80'-0"

NORTH

0 80' 160'
SCALE: 1"=80'-0"

Filename: G:\Everyone\Christine Abbott\Revit Local\Totem Lake Park-PH1_chrislinea@bergerpartnership.com.rvt

Plotted: 9/11/2019 8:07:00 PM

Berger Partnership Project Number: 20154875.02

PARTNERSHIP berger
1927 Post Alley, Ste. 2
Seattle, WA 98101
206 325 6877
bergerpartnership.com

Totem Lake Park Phase 1

City of Kirkland

12031 Totem Lake Way, Kirkland, WA 98034

STATE OF WASHINGTON
ANDY MITTON
NO. 882 EXP. 6/30/2020
LANDSCAPE ARCHITECT

SET TYPE:
Bid Set

SET ISSUE DATE:
09/13/2019

REVISIONS:

Δ	DESCRIPTION	DATE

DRAWN/CHECKED:
MM / AM

SHEET NAME:
PROJECT LIMITS - OVERALL

SHEET NUMBER:
G002

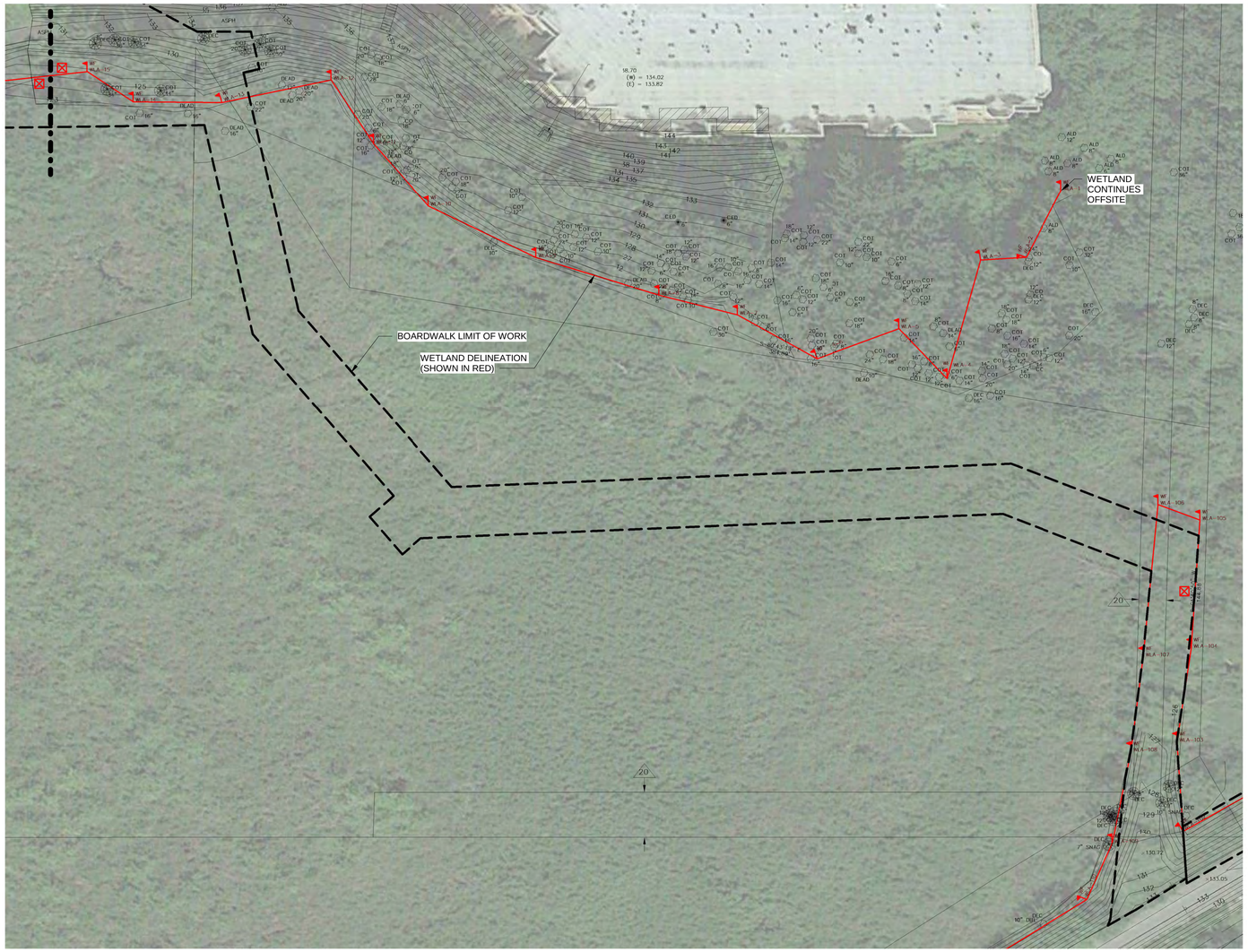

1 PROJECT LIMITS - BOARDWALK
1" = 30'-0"

NORTH

0 30' 60'
SCALE: 1"=30'-0"

berger PARTNERSHIP
1927 Post Alley, Ste. 2
Seattle, WA 98101
206.325.6977
bergerpartnership.com

Totem Lake Park Phase 1

City of Kirkland

12031 Totem Lake Way, Kirkland, WA 98034

STATE OF WASHINGTON
ANDY MITTON
NO. 882 EXP. 6/30/2020
LANDSCAPE ARCHITECT

SET TYPE:
Bid Set

SET ISSUE DATE:
09/13/2019

REVISIONS:

Δ	DESCRIPTION	DATE

DRAWN/CHECKED:
MM / AM

SHEET NAME:
PROJECT LIMITS - BOARDWALK

SHEET NUMBER:
G003

Berger Partnership Project Number: 20154875.02
Plotted: 9/11/2019 8:07:05 PM
Filename: G:\Everyone\Christine Abbott\Revit Local\Totem Lake Park-PH1_christinea@bergerpartnership.com.rvt

TREE REMOVAL GENERAL NOTES	
Note #	Description
1	FOR ALL TREES REMOVED ON PARK SITE (SHEET ET101) ALL MATERIAL SHALL BE COMPLETELY REMOVED FROM SITE.
2	FOR ALL TREES REMOVED ON TRAIL SITE (SHEET ET102) FELL TREES DIRECTIONALLY, SOUTH OF THE TRAIL SUCH THAT THE MAJORITY OF THE TREE LANDS SOUTH OF THE TRAIL IN THE BUFFER.
3	FOR ALL TREES REMOVED ON TRAIL AND BOARDWALK SITE, ANY PORTION OF TREES FELLED FROM THE BUFFER THAT LAND IN THE WETLAND SHALL BE REMOVED FROM THE WETLAND.
4	FOR ALL TREES REMOVED ON TRAIL SITE (SHEET ET102) THAT OCCUR AT WITHIN BUFFER, FELL INTO BUFFER AND LEAVE. RELOCATE ANY PORTIONS OF THE TREE WHICH CONFLICT WITH PROPOSED HARDSCAPE ELEMENTS.
5	FOR ALL TREES REMOVED IN WETLAND AREAS, FELL TREE IN WETLAND AND LEAVE AS-IS. REMOVE/RELOCATE ANY PORTIONS WHICH CONFLICT WITH PROPOSED BOARDWALK.
6	FOR ALL TREES FELLED IN WETLAND AND BUFFER AREAS ON TRAIL AND BOARDWALK SITE (SHEET ET102 & ET103), TREES MAY BE SNAGGED AT 8' MAXIMUM HEIGHT IF THEY ARE LOCATED 10' OR GREATER FROM PROPOSED PATHWAYS, TRAILS, AND BOARDWALK.
7	FOR ALL TREES FELLED IN WETLAND AND BUFFER AREAS ON TRAIL AND BOARDWALK SITE (SHEET ET102 & ET103), LOCATED 10' OR LESS FROM PROPOSED PATHWAYS, TRAILS, AND BOARDWALK. CUT TRUNK W/N 1'-0" OF FEXISTING GRADE.
8	FOR ALL SNAGGED TREES, JAGGED, BAYONET-STYLE CUTS PREFERRED TO FLAT CUTS FOR FELLED TREES THAT WILL BE LEFT IN THE BUFFER (AS SNAGS). BAYONET-STYLE CUTS MIMIC A NATURALLY-BROKEN TRUNK AND BENEFIT HABITAT CONDITIONS.
9	NO TREES OR SHRUBS OUTSIDE LIMIT OF WORK SHALL BE REMOVED.
10	TAG ALL TREES TO BE REMOVED PRIOR TO REMOVAL. CONFIRM WITH LANDSCAPE ARCHITECT. CONFIRM REMOVAL/RETAIN STATUS, FELLING/REMOVAL STATUS AND TREATMENT.

Existing Tree Legend

- EXISTING CONIFER TREE 6" CAL. OR GREATER TO BE RETAINED
- EXISTING DECIDUOUS TREE 6" CAL. OR GREATER TO BE RETAINED
- E1 — TREE INVENTORY NUMBER (REFER TO ARBORIST REPORT for E1-E120. FOR NUMBERS E121 & HIGHER, FIELD VERIFY)
- EXISTING CONIFER TREE 6" CAL. OR GREATER TO BE REMOVED
- EXISTING DECIDUOUS 6" CAL. OR GREATER TREE TO BE REMOVED
- EXISTING SHRUB TO BE REMOVED
- EXISTING TREE LESS THAN 6" CAL. TO BE REMOVED
- TREE PROTECTION FENCING
- WETLAND BOUNDARY LINE

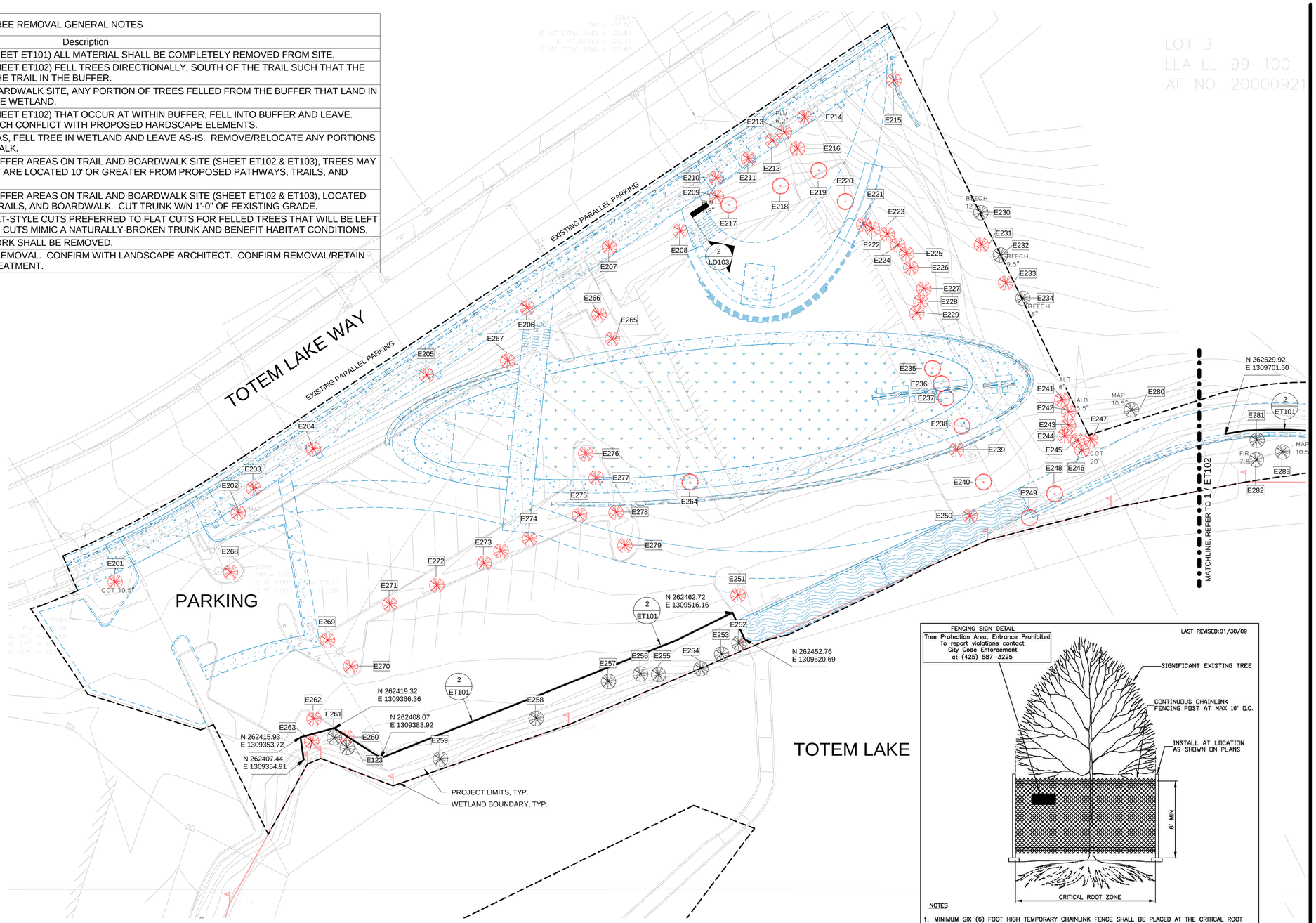

1 SITE PLAN - EXISTING TREES - PARK
1" = 20'-0"

NOTES

1. MINIMUM SIX (6) FOOT HIGH TEMPORARY CHAINLINK FENCE SHALL BE PLACED AT THE CRITICAL ROOT ZONE OR DESIGNATED LIMIT OF DISTURBANCE OF THE TREE TO BE SAVED. FENCE SHALL COMPLETELY ENCIRCLE TREE(S). INSTALL FENCE POSTS USING PIER BLOCK ONLY. AVOID POST OR STAKES INTO MAJOR ROOTS. MODIFICATIONS TO FENCING MATERIAL AND LOCATION MUST BE APPROVED BY PLANNING OFFICIAL.
2. TREATMENT OF ROOTS EXPOSED DURING CONSTRUCTION: FOR ROOTS OVER ONE (1) INCH DIAMETER DAMAGED DURING CONSTRUCTION, MAKE A CLEAN STRAIGHT CUT TO REMOVE DAMAGED PORTION OF ROOT. ALL EXPOSED ROOTS SHALL BE TEMPORARILY COVERED WITH DAMP BURLAP TO PREVENT DRYING, AND COVERED WITH SOIL AS SOON AS POSSIBLE.
3. NO STOCKPILING OF MATERIALS, VEHICULAR TRAFFIC, OR STORAGE OF EQUIPMENT OR MACHINERY SHALL BE ALLOWED WITHIN THE LIMIT OF THE FENCING. FENCING SHALL NOT BE MOVED OR REMOVED UNLESS APPROVED BY THE CITY PLANNING OFFICIAL. WORK WITHIN PROTECTION FENCE SHALL BE DONE MANUALLY UNDER THE SUPERVISION OF THE ON-SITE ARBORIST AND WITH PRIOR APPROVAL BY THE CITY PLANNING OFFICIAL.
4. FENCING SIGNAGE AS DETAILED ABOVE MUST BE POSTED EVERY FIFTEEN (15) FEET ALONG THE FENCE. SIGN TO BE MINIMUM 11"X17", AND MADE OF WEATHERPROOF MATERIAL.

2 TREE PROTECTION
12" = 1'-0"

CITY OF KIRKLAND
PLAN NO. CK-R.49
CITY OF KIRKLAND WASHINGTON
TREE PROTECTION

PARTNERSHIP berger
1927 Post Alley, Ste. 2
Seattle, WA 98101
206 325 6977
bergerpartnership.com

Totem Lake Park Phase 1
City of Kirkland
12031 Totem Lake Way, Kirkland, WA 98034

STATE OF WASHINGTON ANDY MITTON NO. 882 EXP. 6/30/2020 LANDSCAPE ARCHITECT

SET TYPE: **Bid Set**

SET ISSUE DATE: **09/13/2019**

REVISIONS:

Δ	DESCRIPTION	DATE

DRAWN/CHECKED: **MM / AM**

SHEET NAME: **EXISTING TREE PLAN - PARK**

SHEET NUMBER: **ET101**

Berger Partnership Project Number: 20154875.02
Plotted: 9/11/2019 8:21:26 PM
Filename: G:\Everyone\Christina Abbott\Revit Local\Totem Lake Park-PH1_christinea@bergerpartnership.com.rvt

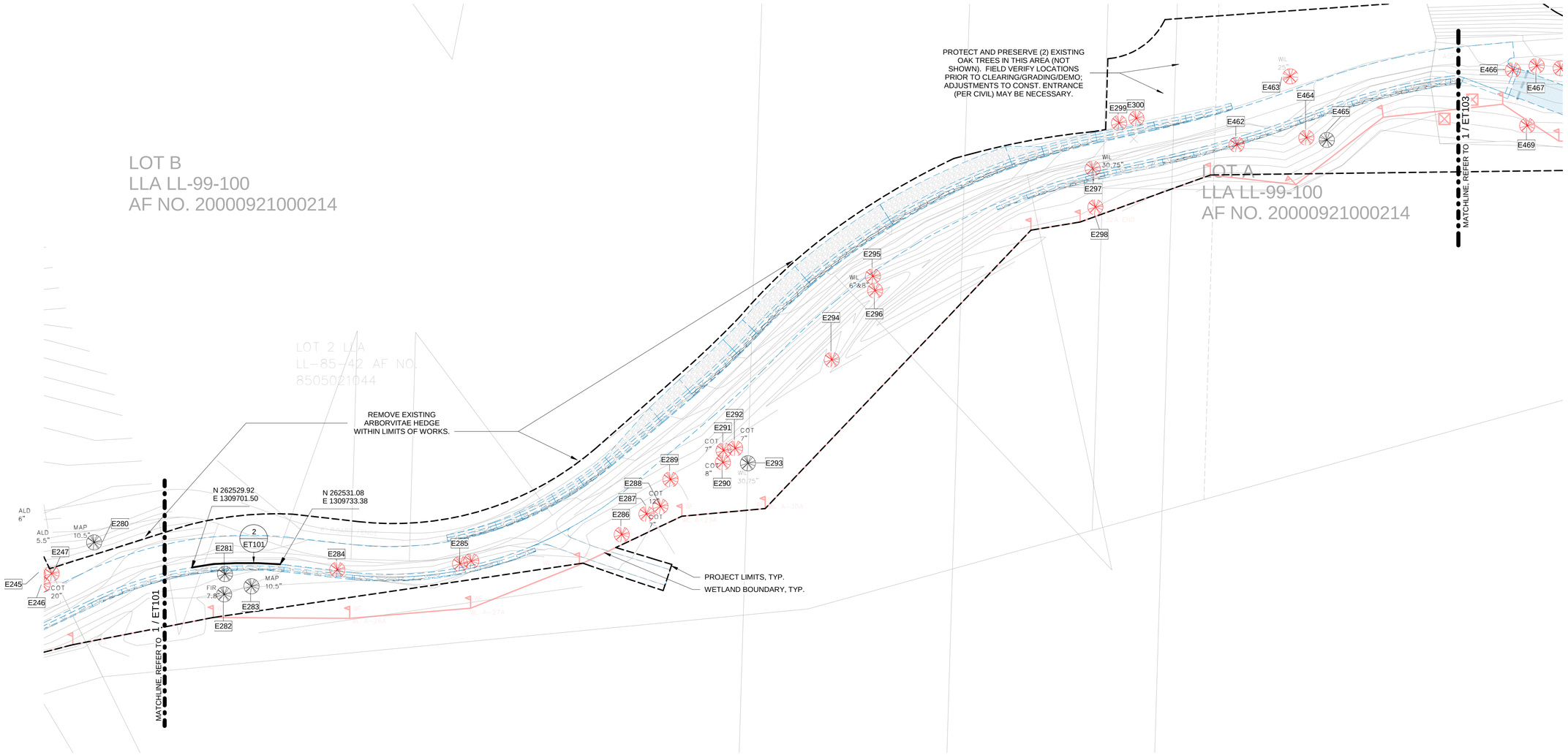

1 SITE PLAN - EXISTING TREES - TRAIL
1" = 20'-0"

NORTH

0 20' 40'
SCALE: 1"=20'-0"

Existing Tree Legend

- EXISTING CONIFER TREE 6" CAL. OR GREATER TO BE RETAINED
- EXISTING DECIDUOUS TREE 6" CAL. OR GREATER TO BE RETAINED
- E1 — TREE INVENTORY NUMBER (REFER TO ARBORIST REPORT for E1-E120. FOR NUMBERS E121 & HIGHER, FIELD VERIFY)
- EXISTING CONIFER TREE 6" CAL. OR GREATER TO BE REMOVED
- EXISTING DECIDUOUS 6" CAL. OR GREATER TREE TO BE REMOVED
- EXISTING SHRUB TO BE REMOVED
- EXISTING TREE LESS THAN 6" CAL. TO BE REMOVED
- TREE PROTECTION FENCING
- WETLAND BOUNDARY LINE

TREE REMOVAL GENERAL NOTES

Note #	Description
1	FOR ALL TREES REMOVED ON PARK SITE (SHEET ET101) ALL MATERIAL SHALL BE COMPLETELY REMOVED FROM SITE.
2	FOR ALL TREES REMOVED ON TRAIL SITE (SHEET ET102) FELL TREES DIRECTIONALLY, SOUTH OF THE TRAIL SUCH THAT THE MAJORITY OF THE TREE LANDS SOUTH OF THE TRAIL IN THE BUFFER.
3	FOR ALL TREES REMOVED ON TRAIL AND BOARDWALK SITE, ANY PORTION OF TREES FELLED FROM THE BUFFER THAT LAND IN THE WETLAND SHALL BE REMOVED FROM THE WETLAND.
4	FOR ALL TREES REMOVED ON TRAIL SITE (SHEET ET102) THAT OCCUR AT WITHIN BUFFER, FELL INTO BUFFER AND LEAVE. RELOCATE ANY PORTIONS OF THE TREE WHICH CONFLICT WITH PROPOSED HARDSCAPE ELEMENTS.
5	FOR ALL TREES REMOVED IN WETLAND AREAS, FELL TREE IN WETLAND AND LEAVE AS-IS. REMOVE/RELOCATE ANY PORTIONS WHICH CONFLICT WITH PROPOSED BOARDWALK.
6	FOR ALL TREES FELLED IN WETLAND AND BUFFER AREAS ON TRAIL AND BOARDWALK SITE (SHEET ET102 & ET103), TREES MAY BE SNAGGED AT 8' MAXIMUM HEIGHT IF THEY ARE LOCATED 10' OR GREATER FROM PROPOSED PATHWAYS, TRAILS, AND BOARDWALK.
7	FOR ALL TREES FELLED IN WETLAND AND BUFFER AREAS ON TRAIL AND BOARDWALK SITE (SHEET ET102 & ET103), LOCATED 10' OR LESS FROM PROPOSED PATHWAYS, TRAILS, AND BOARDWALK. CUT TRUNK W/N 1'-0" OF FEXISTING GRADE.
8	FOR ALL SNAGGED TREES, JAGGED, BAYONET-STYLE CUTS PREFERRED TO FLAT CUTS FOR FELLED TREES THAT WILL BE LEFT IN THE BUFFER (AS SNAGS). BAYONET-STYLE CUTS MIMIC A NATURALLY-BROKEN TRUNK AND BENEFIT HABITAT CONDITIONS.
9	NO TREES OR SHRUBS OUTSIDE LIMIT OF WORK SHALL BE REMOVED.
10	TAG ALL TREES TO BE REMOVED PRIOR TO REMOVAL. CONFIRM WITH LANDSCAPE ARCHITECT. CONFIRM REMOVAL/RETAIN STATUS, FELLING/REMOVAL STATUS AND TREATMENT.

berger PARTNERSHIP
1927 Post Alley, Ste. 2
Seattle, WA 98101
206 325 6877
bergerpartnership.com

Totem Lake Park Phase 1
City of Kirkland
12031 Totem Lake Way, Kirkland, WA 98034

STATE OF WASHINGTON
ANDY MITTON
NO. 982 EXP. 6/30/2020
LANDSCAPE ARCHITECT

SET TYPE:
Bid Set

SET ISSUE DATE:
09/13/2019

REVISIONS:

Δ	DESCRIPTION	DATE

DRAWN/CHECKED:
MM / AM

SHEET NAME:
EXISTING TREE PLAN - TRAIL

SHEET NUMBER:
ET102

Berger Partnership Project Number: 20154875.02
Plotted: 12/3/2019 3:51:32 PM
Filename: G:\Everyone\Christine Abbott\Revit Local\Totem Lake Park-PH1_christinea@bergerpartnership.com.rvt

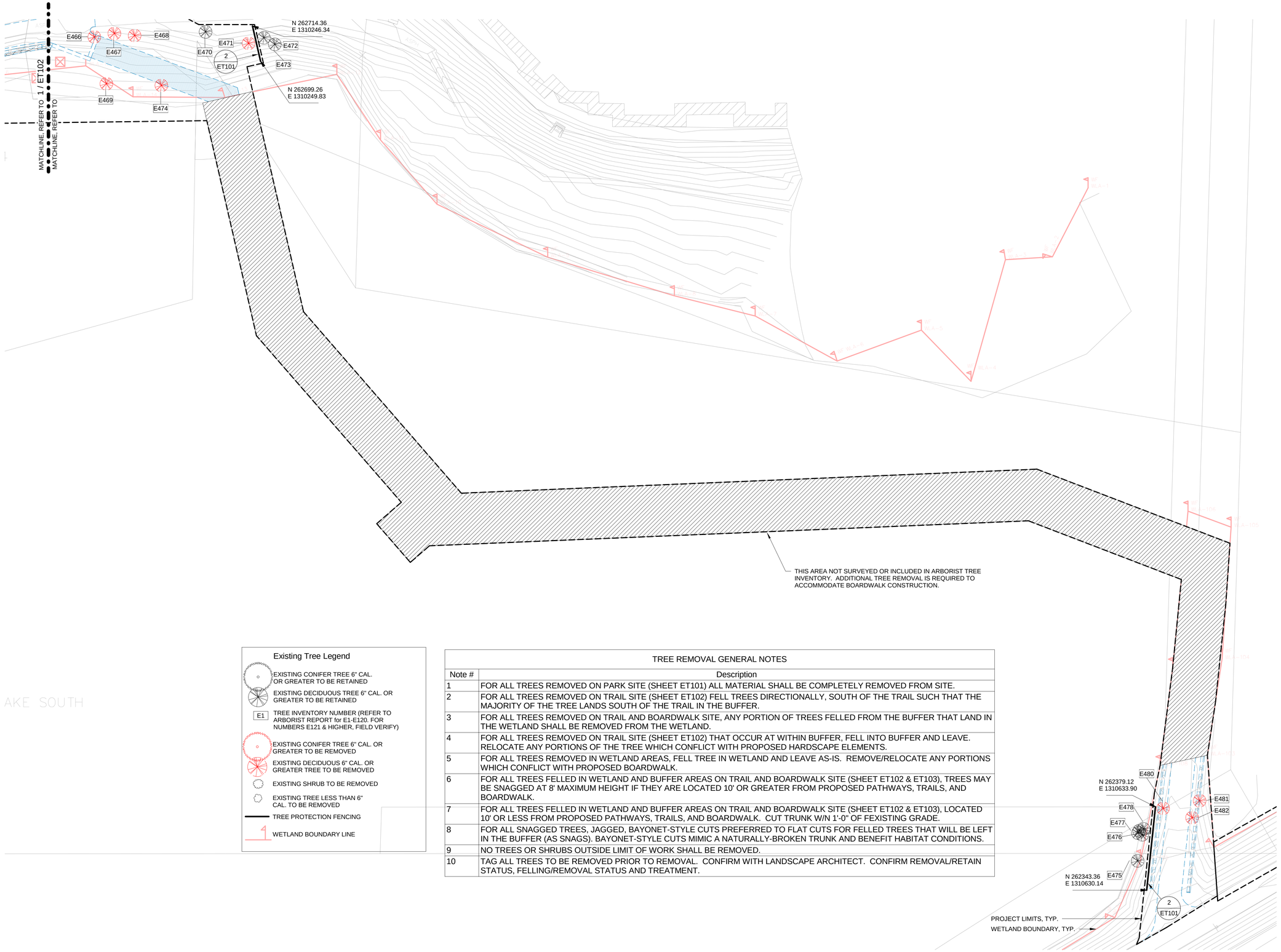

Existing Tree Legend

- EXISTING CONIFER TREE 6" CAL. OR GREATER TO BE RETAINED
- EXISTING DECIDUOUS TREE 6" CAL. OR GREATER TO BE RETAINED
- E1 — TREE INVENTORY NUMBER (REFER TO ARBORIST REPORT for E1-E120. FOR NUMBERS E121 & HIGHER, FIELD VERIFY)
- EXISTING CONIFER TREE 6" CAL. OR GREATER TO BE REMOVED
- EXISTING DECIDUOUS 6" CAL. OR GREATER TREE TO BE REMOVED
- EXISTING SHRUB TO BE REMOVED
- EXISTING TREE LESS THAN 6" CAL. TO BE REMOVED
- TREE PROTECTION FENCING
- WETLAND BOUNDARY LINE

TREE REMOVAL GENERAL NOTES

Note #	Description
1	FOR ALL TREES REMOVED ON PARK SITE (SHEET ET101) ALL MATERIAL SHALL BE COMPLETELY REMOVED FROM SITE.
2	FOR ALL TREES REMOVED ON TRAIL SITE (SHEET ET102) FELL TREES DIRECTIONALLY, SOUTH OF THE TRAIL SUCH THAT THE MAJORITY OF THE TREE LANDS SOUTH OF THE TRAIL IN THE BUFFER.
3	FOR ALL TREES REMOVED ON TRAIL AND BOARDWALK SITE, ANY PORTION OF TREES FELLED FROM THE BUFFER THAT LAND IN THE WETLAND SHALL BE REMOVED FROM THE WETLAND.
4	FOR ALL TREES REMOVED ON TRAIL SITE (SHEET ET102) THAT OCCUR AT WITHIN BUFFER, FELL INTO BUFFER AND LEAVE. RELOCATE ANY PORTIONS OF THE TREE WHICH CONFLICT WITH PROPOSED HARDSCAPE ELEMENTS.
5	FOR ALL TREES REMOVED IN WETLAND AREAS, FELL TREE IN WETLAND AND LEAVE AS-IS. REMOVE/RELOCATE ANY PORTIONS WHICH CONFLICT WITH PROPOSED BOARDWALK.
6	FOR ALL TREES FELLED IN WETLAND AND BUFFER AREAS ON TRAIL AND BOARDWALK SITE (SHEET ET102 & ET103), TREES MAY BE SNAGGED AT 8' MAXIMUM HEIGHT IF THEY ARE LOCATED 10' OR GREATER FROM PROPOSED PATHWAYS, TRAILS, AND BOARDWALK.
7	FOR ALL TREES FELLED IN WETLAND AND BUFFER AREAS ON TRAIL AND BOARDWALK SITE (SHEET ET102 & ET103), LOCATED 10' OR LESS FROM PROPOSED PATHWAYS, TRAILS, AND BOARDWALK. CUT TRUNK W/N 1'-0" OF FEXISTING GRADE.
8	FOR ALL SNAGGED TREES, JAGGED, BAYONET-STYLE CUTS PREFERRED TO FLAT CUTS FOR FELLED TREES THAT WILL BE LEFT IN THE BUFFER (AS SNAGS). BAYONET-STYLE CUTS MIMIC A NATURALLY-BROKEN TRUNK AND BENEFIT HABITAT CONDITIONS.
9	NO TREES OR SHRUBS OUTSIDE LIMIT OF WORK SHALL BE REMOVED.
10	TAG ALL TREES TO BE REMOVED PRIOR TO REMOVAL. CONFIRM WITH LANDSCAPE ARCHITECT. CONFIRM REMOVAL/RETAIN STATUS, FELLING/REMOVAL STATUS AND TREATMENT.

1 SITE PLAN - EXISTING TREES - BOARDWALK
1" = 20'-0"

berger PARTNERSHIP
1927 Post Alley, Ste. 2
Seattle, WA 98101
206 325 6877
bergerpartnership.com

Totem Lake Park Phase 1
City of Kirkland
12031 Totem Lake Way, Kirkland, WA 98034

STATE OF WASHINGTON ANDY MITTON NO. 882 EXP. 6/30/2020 LANDSCAPE ARCHITECT

SET TYPE:
Bid Set

SET ISSUE DATE:
09/13/2019

REVISIONS:

Δ	DESCRIPTION	DATE

DRAWN/CHECKED:
MM / AM

SHEET NAME:
EXISTING TREE PLAN - BOARDWALK

SHEET NUMBER:
ET103

Berger Partnership Project Number: 20154875.02
Plotted: 9/11/2019 8:21:30 PM
Filename: G:\Everyone\Christine Abbott\Revit Local\Totem Lake Park-PH1_christinea@bergerpartnership.com.rvt

EROSION/SEDIMENTATION CONTROL - PLAN NOTES

1. THE APPROVED CONSTRUCTION SEQUENCE SHALL BE AS FOLLOWS:
   a. CONDUCT PRE-CONSTRUCTION MEETING.
   b. FLAG OR FENCE CLEARING LIMITS.
   c. INSTALL TREE PROTECTIVE FENCING.
   d. POST SIGN WITH NAME AND PHONE NUMBER OF TESC SUPERVISOR. ALSO POST PROJECT SIGN ON FENCING.
   e. INSTALL CATCH BASIN PROTECTION IF REQUIRED.
   f. INSTALL VELOCE TEMPORARY DRIVEWAY.
   g. GRADE AND INSTALL CONSTRUCTION ENTRANCE(S).
   h. INSTALL PERIMETER PROTECTION (SILT FENCE, BRUSH BARRIER, ETC.).
   i. CONSTRUCT SEDIMENT PONDS AND TRAPS.
   j. GRADE AND STABILIZE CONSTRUCTION ROADS.
   k. CONSTRUCT SURFACE WATER CONTROLS (INTERCEPTOR DIKES, PIPE SLOPE DRAINS, ETC.) SIMULTANEOUSLY WITH CLEARING AND GRADING FOR PROJECT DEVELOPMENT.
   l. MAINTAIN EROSION CONTROL MEASURE IN ACCORDANCE WITH CITY OF KIRKLAND STANDARDS AND MANUFACTURER'S RECOMMENDATIONS.
   m. RELOCATE EROSION CONTROL MEASURES OR INSTALL NEW MEASURES SO THAT AS SITE CONDITIONS CHANGE, THE EROSION AND SEDIMENT CONTROL IS ALWAYS IN ACCORDANCE WITH THE CITY TESC MINIMUM REQUIREMENTS.
   n. COVER ALL AREAS WITHIN THE SPECIFIED TIME FRAME WITH STRAW, WOOD FIBER MULCH, COMPOST, PLASTIC SHEETING, CRUSHED ROCK OR EQUIVALENT.
   o. STABILIZE ALL AREAS THAT REACH FINAL GRADE WITHIN 7 DAYS.
   p. SEED OR SOD ANY AREAS TO REMAIN UNWORKED FOR MORE THAN 30 DAYS.
   q. UPON COMPLETION OF THE PROJECT, ALL DISTURBED AREAS MUST BE STABILIZED AND BEST MANAGEMENT PRACTICES REMOVED IF APPROPRIATE.

2. CONTRACTOR IS RESPONSIBLE FOR KEEPING STREETS CLEAN AND FREE OF CONTAMINANTS AT ALL TIMES AND FOR PREVENTING AN ILLICIT DISCHARGE (KMC 15.52) INTO THE MUNICIPAL STORM DRAIN SYSTEM. IF YOUR CONSTRUCTION PROJECT CAUSES AN ILLICIT DISCHARGE TO THE MUNICIPAL STORM DRAIN SYSTEM, THE CITY OF KIRKLAND STORM MAINTENANCE DIVISION WILL BE CALLED AT (425) 587-3900 TO CLEAN THE PUBLIC STORM SYSTEM, AND OTHER AFFECTED PUBLIC INFRASTRUCTURE. THE CONTRACTOR(S), PROPERTY OWNER, AND ANY OTHER RESPONSIBLE PARTY MAY BE CHARGED ALL COSTS ASSOCIATED WITH THE CLEAN-UP AND MAY ALSO BE ASSESSED MONETARY PENALTIES (KMC 1.12.200). THE MINIMUM PENALTY IS $250. A FINAL INSPECTION OF YOUR PROJECT WILL NOT BE GRANTED UNTIL ALL COSTS ASSOCIATED WITH THE CLEAN-UP, AND PENALTIES, ARE PAID TO THE CITY OF KIRKLAND.

3. CONSTRUCTION DEWATERING DISCHARGES SHALL ALWAYS MEET WATER QUALITY GUIDELINES LISTED IN COK POLICY E-1. SPECIFICALLY, DISCHARGES TO THE PUBLIC STORMWATER DRAINAGE SYSTEM MUST BE BELOW 25NTU, AND NOT CONSIDERED AN ILLICIT DISCHARGE (PER KMC 15.52.090).
   TEMPORARY DISCHARGES TO SANITARY SEWER REQUIRE PRIOR AUTHORIZATION AND PERMIT FROM KING COUNTY INDUSTRIAL WASTE PROGRAM (206-263-3000) AND NOTIFICATION TO THE PUBLIC WORKS CONSTRUCTION INSPECTOR.

4. ALL WORK AND MATERIALS SHALL BE IN ACCORDANCE WITH CITY OF KIRKLAND STANDARDS, SPECIFICATIONS, AND GENERAL POLICIES.

5. THE BOUNDARIES OF THE CLEARING LIMITS SHOWN ON THIS PLAN SHALL BE SET BY SURVEY AND CLEARLY FLAGGED IN THE FIELD BY A CLEARING CONTROL FENCE PRIOR TO CONSTRUCTION. DURING THE CONSTRUCTION PERIOD, NO DISTURBANCE OR REMOVAL OF ANY GROUND COVER BEYOND THE FLAGGED EROSION - PLAN NOTES (CONTINUED) CLEARING LIMITS SHALL BE PERMITTED. THE FLAGGING SHALL BE MAINTAINED BY THE PERMITTEE/CONTRACTOR FOR THE DURATION OF CONSTRUCTION.

6. APPROVAL OF THIS EROSION/SEDIMENTATION CONTROL (ESC) PLAN DOES NOT CONSTITUTE AN APPROVAL OF PERMANENT ROAD OR DRAINAGE DESIGN (E.G., SIZE AND LOCATION OF ROADS, PIPES, RESTRICTORS, CHANNELS, RETENTION FACILITIES, UTILITIES, ETC.).

7. THE CITY WILL TRANSFER THE NPDES PERMIT TO THE CONTRACTOR. THE IMPLEMENTATION OF THIS ESC PLAN AND THE CONSTRUCTION, MAINTENANCE, REPLACEMENT, AND UPGRADING OF THESE ESC FACILITIES IS THE RESPONSIBILITY OF THE PERMITTEE/CONTRACTOR UNTIL ALL CONSTRUCTION IS APPROVED.

8. A COPY OF THE APPROVED ESC PLANS MUST BE ON THE JOB SITE WHENEVER CONSTRUCTION IS IN PROGRESS.

9. THE ESC FACILITIES SHOWN ON THIS PLAN MUST BE CONSTRUCTED PRIOR TO OR IN CONJUNCTION WITH ALL CLEARING AND GRADING ACTIVITIES IN SUCH A MANNER AS TO ENSURE THAT SEDIMENT-LADEN WATER DOES NOT ENTER THE DRAINAGE SYSTEM OR VIOLATE APPLICABLE WATER STANDARDS. WHEREVER POSSIBLE, MAINTAIN NATURAL VEGETATION FOR SILT CONTROL.

10. THE ESC FACILITIES SHALL BE CONSTRUCTED IN ACCORDANCE WITH THE DETAILS ON THE APPROVED PLANS. LOCATIONS MAY BE MOVED TO SUIT FIELD CONDITIONS, SUBJECT TO APPROVAL BY THE ENGINEER AND THE CITY OF KIRKLAND INSPECTOR.

11. THE ESC FACILITIES SHOWN ON THIS PLAN ARE THE MINIMUM REQUIREMENTS FOR ANTICIPATED SITE CONDITIONS. DURING THE CONSTRUCTION PERIOD, THESE ESC FACILITIES SHALL BE UPGRADED (E.G., ADDITIONAL SUMPS, RELOCATION OF DITCHES AND SILT FENCES, ETC.) AS NEEDED FOR UNEXPECTED STORM EVENTS. ADDITIONALLY, MORE ESC FACILITIES MAY BE REQUIRED TO ENSURE COMPLETE SILTATION CONTROL. THEREFORE, DURING THE COURSE OF CONSTRUCTION IT SHALL BE THE OBLIGATION AND RESPONSIBILITY OF THE CONTRACTOR TO ADDRESS ANY NEW CONDITIONS THAT MAY BE CREATED BY HIS ACTIVITIES AND TO PROVIDE ADDITIONAL FACILITIES OVER AND ABOVE THE MINIMUM REQUIREMENTS AS MAY BE NEEDED.

12. THE ESC FACILITIES SHALL BE INSPECTED BY THE PERMITTEE/CONTRACTOR DAILY DURING NON-RAINFALL PERIODS, EVERY HOUR (DAYLIGHT) DURING A RAINFALL EVENT, AND AT THE END OF EVERY RAINFALL, AND MAINTAINED AS NECESSARY TO ENSURE THEIR CONTINUED FUNCTIONING. IN ADDITION, TEMPORARY SILTATION PONDS AND ALL TEMPORARY SILTATION CONTROLS SHALL BE MAINTAINED IN A SATISFACTORY CONDITION UNTIL SUCH TIME THAT CLEARING AND/OR CONSTRUCTION IS COMPLETED, PERMANENT DRAINAGE FACILITIES ARE OPERATIONAL, AND THE POTENTIAL FOR EROSION HAS PASSED. WRITTEN RECORDS SHALL BE KEPT DOCUMENTING THE REVIEWS OF THE ESC FACILITIES, AND A COPY OF THESE RECORDS SHALL BE PROVIDED TO THE CITY OF KIRKLAND AT THE CLOSE OF THE PROJECT.

13. THE ESC FACILITIES ON INACTIVE SITES SHALL BE INSPECTED AND MAINTAINED A MINIMUM OF ONCE A MONTH OR WITHIN 48 HOURS FOLLOWING A STORM EVENT.

14. STABILIZED CONSTRUCTION ENTRANCES SHALL BE INSTALLED AT THE BEGINNING OF CONSTRUCTION AND MAINTAINED FOR THE DURATION OF THE PROJECT. ADDITIONAL MEASURES, SUCH AS WASH PADS, MAY BE REQUIRED TO ENSURE THAT ALL PAVED AREAS ARE KEPT CLEAN FOR THE DURATION OF THE PROJECT.

15. ALL DENUDED SOILS MUST BE STABILIZED WITH AN APPROVED TESC METHOD (E.G. SEEDING, MULCHING, PLASTIC COVERING, CRUSHED ROCK) WITHIN THE FOLLOWING TIMELINES:
   • MAY 1 TO SEPTEMBER 30 - SOILS MUST BE STABILIZED WITHIN 7 DAYS OF GRADING.
   • OCTOBER 1 TO APRIL 30 - SOILS MUST BE STABILIZED WITHIN 2 DAYS OF GRADING.
   • STABILIZE SOILS AT THE END OF THE WORKDAY PRIOR TO A WEEKEND, HOLIDAY, OR PREDICTED RAIN EVENT.

16. WHERE SEEDING FOR TEMPORARY EROSION CONTROL IS REQUIRED, FAST GERMINATING GRASSES SHALL BE APPLIED AT AN APPROPRIATE RATE (EXAMPLE: ANNUAL OR PERENNIAL RYE APPLIED AT APPROXIMATELY 80 POUNDS PER ACRE).

17. WHERE STRAW MULCH IS REQUIRED FOR TEMPORARY EROSION CONTROL, IT SHALL BE APPLIED AT A MINIMUM THICKNESS OF 2".

18. CLEARING LIMITS SHALL BE DELINEATED WITH A CLEARING CONTROL FENCE. THE CLEARING CONTROL FENCE SHALL CONSIST OF A 6-FT. HIGH CHAIN LINK FENCE ADJACENT THE DRIP LINE OF TREES TO BE SAVED, WETLAND OR STREAM BUFFERS, AND SENSITIVE SLOPES. CLEARING CONTROL FENCES ALONG WETLAND OR STREAM BUFFERS OR UPSLOPE OF SENSITIVE SLOPES SHALL BE ACCOMPANIED BY AN EROSION CONTROL FENCE. IF APPROVED BY THE CITY, A FOUR-FOOT HIGH ORANGE MESH CLEARING CONTROL FENCE MAY BE USED TO DELINEATE CLEARING LIMITS IN ALL OTHER AREAS.

19. OFF-SITE STREETS MUST BE KEPT CLEAN AT ALL TIMES. IF DIRT IS DEPOSITED ON THE PUBLIC STREET SYSTEM, THE STREET SHALL BE IMMEDIATELY CLEANED WITH POWER SWEEPER OR OTHER EQUIPMENT. ALL VEHICLES SHALL LEAVE THE SITE BY WAY OF THE CONSTRUCTION ENTRANCE AND SHALL BE CLEANED OF ALL DIRT THAT WOULD BE DEPOSITED ON THE PUBLIC STREETS.

20. ROCK FOR EROSION PROTECTION OF ROADWAY DITCHES, WHERE REQUIRED, MUST BE OF SOUND QUARRY ROCK, PLACED TO A DEPTH OF 1' AND MUST MEET THE FOLLOWING SPECIFICATIONS: 4"-8" ROCK/40%-70% PASSING; 2"-4" ROCK/30%-40% PASSING; AND 1"-2" ROCK/10%-20% PASSING. RECYCLED CONCRETE SHALL NOT BE USED FOR EROSION PROTECTION, INCLUDING CONSTRUCTION ENTRANCE OR TEMPORARY STABILIZATION ELSEWHERE ON THE SITE.

21. IF ANY PART(S) OF THE CLEARING LIMIT BOUNDARY OR TEMPORARY EROSION/SEDIMENTATION CONTROL PLAN IS/ARE DAMAGED, IT SHALL BE REPAIRED IMMEDIATELY.

22. ALL PROPERTIES ADJACENT TO THE PROJECT SITE SHALL BE PROTECTED FROM SEDIMENT DEPOSITION AND RUNOFF.

23. AT NO TIME SHALL MORE THAN 1' OF SEDIMENT BE ALLOWED TO ACCUMULATE WITHIN A CATCH BASIN. ALL CATCH BASINS AND CONVEYANCE LINES SHALL BE CLEANED IMMEDIATELY FOLLOWING REMOVAL OF EROSION CONTROL BMPS. THE CLEANING OPERATION SHALL NOT FLUSH SEDIMENT-LADEN WATER INTO THE DOWNSTREAM SYSTEM.

24. ANY PERMANENT RETENTION/DETENTION FACILITY USED AS A TEMPORARY SETTLING BASIN SHALL BE MODIFIED WITH THE NECESSARY EROSION CONTROL MEASURES AND SHALL PROVIDE ADEQUATE STORAGE CAPACITY. IF THE PERMANENT FACILITY IS TO FUNCTION ULTIMATELY AS AN INFILTRATION OR DISPERSION SYSTEM, THE FACILITY SHALL NOT BE USED AS A TEMPORARY SETTLING BASIN. NO UNDERGROUND DETENTION TANK, DETENTION VAULT, OR SYSTEM WHICH BACKS UNDER OR INTO A POND SHALL BE USED AS A TEMPORARY SETTLING BASIN.

25. THE WASHED GRAVEL BACKFILL ADJACENT TO THE FILTER FABRIC FENCE SHALL BE REPLACED AND THE FILTER FABRIC CLEANED IF IT IS NONFUNCTIONAL BY EXCESSIVE SILT ACCUMULATION AS DETERMINED BY THE CITY OF KIRKLAND. ALSO, ALL INTERCEPTOR SWALES SHALL BE CLEANED IF SILT ACCUMULATION EXCEEDS ONE-QUARTER DEPTH.

26. PRIOR TO THE OCTOBER 1 OF EACH YEAR (THE BEGINNING OF THE WET SEASON), ALL DISTURBED AREAS SHALL BE REVIEWED TO IDENTIFY WHICH ONES CAN BE SEEDED IN PREPARATION FOR THE WINTER RAINS. THE IDENTIFIED DISTURBED AREA SHALL BE SEEDED WITHIN ONE WEEK AFTER OCTOBER 1. A SITE PLAN DEPICTING THE AREAS TO BE SEEDED AND THE AREAS TO REMAIN UNCOVERED SHALL BE SUBMITTED TO THE PUBLIC WORKS CONSTRUCTION INSPECTOR. THE INSPECTOR CAN REQUIRE SEEDING OF ADDITIONAL AREAS IN ORDER TO PROTECT SURFACE WATERS, ADJACENT PROPERTIES, OR DRAINAGE FACILITIES.

27. ANY CATCH BASINS COLLECTING RUNOFF FROM THE SITE, WHETHER THEY ARE ON OR OFF THE SITE, SHALL HAVE ADEQUATE PROTECTION FROM SEDIMENT. CATCH BASINS DIRECTLY DOWNSTREAM OF THE CONSTRUCTION ENTRANCE OR ANY OTHER CATCH BASIN AS DETERMINED BY THE CITY INSPECTOR SHALL BE PROTECTED WITH A "STORM DRAIN PROTECTION INSERT" OR EQUIVALENT.

28. DO NOT FLUSH CONCRETE BY-PRODUCTS OR TRUCKS NEAR OR INTO THE STORM DRAINAGE SYSTEM. IF EXPOSED AGGREGATE IS FLUSHED INTO THE STORM SYSTEM, IT COULD MEAN RE-CLEANING THE ENTIRE DOWNSTREAM STORM SYSTEM, OR POSSIBLY RE-LAYING THE STORM LINE.

29. RECYCLED CONCRETE SHALL NOT BE STOCKPILED ON SITE. USE OR REUSE OF RECYCLED CONCRETE ON THE SITE IS PROHIBITED.

NORTHSHORE UTILITY DISTRICT GENERAL NOTES

SMALL PROJECTS SERVICE SEWER AND WATER GENERAL NOTES:

1. ALL WORK AND MATERIALS SHALL BE IN ACCORDANCE WITH THE SMALL PROJECT SERVICE SPECIFICATIONS AND THE STANDARD DETAILS OF NORTHSHORE UTILITY DISTRICT.

UTILITY LOCATES:
2. THE APPROXIMATE LOCATIONS OF EXISTING UTILITIES ARE SHOWN ON PLANS AND PROFILES FOR CONVENIENCE. THE CONTRACTOR SHALL BE RESPONSIBLE FOR VERIFICATION OF UTILITY LOCATIONS SHOWN AND FOR DISCOVERY OF POSSIBLE ADDITIONAL UTILITIES NOT SHOWN ON PLANS.
3. IT SHALL BE THE RESPONSIBILITY OF THE CONTRACTOR TO HAVE LOCATED, BY APPROPRIATE UTILITY DISTRICTS OR COMPANIES, ALL UNDERGROUND UTILITIES PRIOR TO BEGINNING CONSTRUCTION.
4. FOR UTILITY LOCATES IN KING COUNTY, CALL 1-800-424-5555 PRIOR TO DIGGING.

PRE-CON:
5. A PRE-CONSTRUCTION CONFERENCE SHALL BE HELD AT CITY OF KIRKLAND OFFICE OR ONSITE PRIOR TO THE START OF CONSTRUCTION. DISTRICT STAFF WILL NOTIFY THE APPROPRIATE AGENCIES OR REPRESENTATIVES.

SURVEYING:
6. PRIOR TO CONSTRUCTION, LOT CORNERS, EASEMENTS AND PRIVATE ACCESS TRACTS SHALL BE STAKED.
7. HORIZONTAL CONTROL DATA SHALL BE NAD '83/'91. VERTICAL CONTROL SHALL BE NAVD-88 DATUM.
8. AT THE CONCLUSION OF CONSTRUCTION, THE DEVELOPER'S REGISTERED PROFESSIONAL SURVEYOR SHALL PREPARE A DRAWING BASED ON THE SURVEYED LOCATION OF ALL APPURTENANCES INSTALLED, INCLUDING BUT NOT LIMITED TO, MANHOLES, CLEANOUTS, WATER METERS AND WATER SERVICE LINES.

CONSTRUCTION:
9. ALL CONSTRUCTION SHALL BE IN ACCORDANCE WITH THE SMALL PROJECT SERVICE SPECIFICATIONS AND THE STANDARD DETAILS OF NORTHSHORE UTILITY DISTRICT.

MATERIALS:
10. ALL MATERIALS SHALL BE IN ACCORDANCE WITH THE SMALL PROJECT SERVICE SPECIFICATIONS AND THE STANDARD DETAILS OF NORTHSHORE UTILITY DISTRICT.

PLACEMENT:
11. SEWER AND WATER SERVICE LOCATIONS SHALL BE AS SHOWN ON THE PLANS OR AS OTHERWISE APPROVED BY NORTHSHORE UTILITY DISTRICT.

PARTNERSHIP berger
1927 Post Alley, Ste. 2
Seattle, WA 98101
206 325 6877
bergerpartnership.com

ch2m

Totem Lake Park Phase 1
City of Kirkland
12031 Totem Lake Way, Kirkland, WA 98034

WILLIAMS STATE OF WASHINGTON 45577 REGISTERED PROFESSIONAL ENGINEER
11-20-2019

SET TYPE:
BID SET

SET ISSUE DATE:
9/13/2019

REVISIONS:

DRAWN/CHECKED:
DRW / CHK

SHEET NAME:
CIVIL GENERAL NOTES

SHEET NUMBER:
C001

Berger Partnership Project Number: XXXXXXXX.XX Printed: 11.25.2019 9:43 AM By: Luehrs, Teresa/CCG Filename: C:\pw_workdir\den0003\ch2mhill_l\luehrs\dms97542\c001_694933.dwg

STORM DRAINAGE - PLAN NOTES

1. A PRE-CONSTRUCTION CONFERENCE SHALL BE HELD PRIOR TO THE START OF CONSTRUCTION. THE CONTRACTOR SHALL BE RESPONSIBLE FOR SECURING ALL NECESSARY PERMITS PRIOR TO CONSTRUCTION.
2. BEFORE ANY CONSTRUCTION MAY OCCUR, THE CONTRACTOR SHALL HAVE PLANS WHICH HAVE BEEN SIGNED AND APPROVED BY THE CITY OF KIRKLAND PUBLIC WORKS DEPARTMENT, OBTAINED ALL CITY, COUNTY, STATE, FEDERAL AND OTHER REQUIRED PERMITS, AND HAVE POSTED ALL REQUIRED BONDS.
3. ALL STORM DRAINAGE IMPROVEMENTS SHALL BE DESIGNED AND CONSTRUCTED IN ACCORDANCE WITH THE LATEST EDITION OF THE CITY OF KIRKLAND PUBLIC WORKS PRE-APPROVED PLANS AND POLICIES AND THE STANDARD SPECIFICATIONS FOR ROAD, BRIDGE AND MUNICIPAL CONSTRUCTION, PREPARED BY WSDOT AND THE AMERICAN PUBLIC WORKS ASSOCIATION (APWA)
4. ANY DEVIATION FROM THE APPROVED PLANS WILL REQUIRE WRITTEN APPROVAL, ALL CHANGES SHALL BE SUBMITTED TO THE CITY.
5. A COPY OF THE APPROVED STORM WATER PLANS MUST BE ON THE JOB SITE WHENEVER CONSTRUCTION IS IN PROGRESS.
6. ALL DISTURBED AREAS SHALL BE SEEDED AND MULCHED OR SIMILARLY STABILIZED TO THE SATISFACTION OF THE CITY OF KIRKLAND DEPARTMENT OF PUBLIC WORKS FOR THE PREVENTION OF ON-SITE EROSION AFTER THE COMPLETION OF CONSTRUCTION.
7. MINIMUM COVER OVER STORM DRAINAGE PIPES IN ROW OR VEHICULAR PATH SHALL BE 18 INCHES, UNLESS OTHER DESIGN IS APPROVED.
8. STEEL PIPE SHALL HAVE ASPHALT TREATMENT #1 OR BETTER INSIDE AND OUTSIDE.
9. ALL CATCH BASINS SHALL BE TYPE I UNLESS OTHERWISE NOTED. CATCH BASINS WITH A DEPTH OF OVER FIVE FEET (5') TO THE PIPE INVERT SHALL BE A TYPE II CATCH BASIN. TYPE II CATCH BASINS EXCEEDING FIVE FEET (5') IN DEPTH SHALL HAVE A STANDARD LADDER INSTALLED. ALL CATCH BASIN LIDS ARE REQUIRED TO MEET KIRKLAND STANDARD PLAN SHEET CK-D.18A.
10. ALL STORM DRAINAGE MAIN EXTENSIONS WITHIN THE PUBLIC RIGHT-OF-WAY OR IN EASEMENTS MUST BE STAKED FOR LINE AND GRADE PRIOR TO STARTING CONSTRUCTION.
11. ALL PIPE, MANHOLES, CATCH BASINS, AND APPURTENANCES SHALL BE LAID ON A PROPERLY PREPARED FOUNDATION IN ACCORDANCE WITH THE CURRENT STATE OF WASHINGTON STANDARD SPECIFICATIONS FOR ROAD AND BRIDGE CONSTRUCTION (WSDOT). THIS SHALL INCLUDE NECESSARY LEVELING OF THE TRENCH BOTTOM OR THE TOP OF THE FOUNDATION MATERIAL AS WELL AS PLACEMENT AND COMPACTION OF REQUIRED BEDDING MATERIAL TO UNIFORM GRADE SO THAT THE ENTIRE LENGTH OF THE PIPE WILL BE SUPPORTED ON A UNIFORMLY DENSE, UNYIELDING BASE. IF THE NATIVE MATERIAL IN THE BOTTOM OF THE TRENCH MEETS THE REQUIREMENTS FOR "GRAVEL BACKFILL FOR PIPE BEDDING," THE FIRST LIFT OF PIPE BEDDING MAY BE OMITTED PROVIDED THE MATERIAL IN THE BOTTOM OF THE TRENCH IS LOOSENED, REGRADED, AND COMPACTED TO FORM A DENSE UNYIELDING BASE. ALL PIPE BEDDING SHALL BE CSTC PER WSDOT 9-03.9(3). PIPE SHALL NOT BE INSTALLED ON SOD, FROZEN EARTH, LARGE BOULDERS, OR ROCK. PIPE BEDDING FOR FLEXIBLE PIPES SHALL BE PEA GRAVEL TO THE SPRINGLINE OF THE PIPE.
12. CONSTRUCTION OF DEWATERING DISCHARGES SHALL ALWAYS MEET WATER QUALITY GUIDELINES LISTED IN COK POLICY E-1. SPECIFICALLY, DISCHARGES TO THE PUBLIC STORMWATER DRAINAGE SYSTEM MUST BE BELOW 25NTU, AND NOT CONSIDERED A PROHIBITED DISCHARGE (PER KMC 15.52.090). TEMPORARY DISCHARGES TO SANITARY SEWER REQUIRE PRIOR AUTHORIZATION AND PERMIT FROM KING COUNTY INDUSTRIAL WASTE PROGRAM (206-263-3000) AND NOTIFICATION TO THE PUBLIC WORKS CONSTRUCTION INSPECTOR.
13. ALL TRENCH BACKFILL SHALL BE COMPACTED TO 95 PERCENT DENSITY IN ROADWAYS, ROADWAY SHOULDERS, ROADWAY PRISM AND DRIVEWAYS, AND 85 PERCENT DENSITY IN UNPAVED AREAS. ALL PIPE ZONE COMPACTION SHALL BE 95 PERCENT.
14. THE CONTRACTOR SHALL BE RESPONSIBLE FOR PROVIDING ADEQUATE SAFEGUARDS, SAFETY DEVICES, PROTECTIVE EQUIPMENT, CONFINED SPACE PROTECTION, FLAGGERS, AND ANY OTHER NEEDED ACTIONS TO PROTECT THE LIFE, HEALTH, AND SAFETY OF THE PUBLIC, AND TO PROTECT PROPERTY IN CONNECTION WITH THE PERFORMANCE OF WORK COVERED BY THE CONTRACT. ANY WORK WITHIN THE TRAVELED RIGHT-OF-WAY THAT MAY INTERRUPT NORMAL TRAFFIC FLOW SHALL REQUIRE A TRAFFIC CONTROL PLAN APPROVED BY THE CITY OF KIRKLAND. ALL SECTIONS OF THE WSDOT STANDARD SPECIFICATIONS, TRAFFIC CONTROL, AND THE MANUAL OF UNIFORM TRAFFIC CONTROL DEVICES (MUTCD) SHALL APPLY.
15. NO FINAL CUT OR FILL SLOPE SHALL EXCEED SLOPES OF TWO (2) HORIZONTAL TO ONE (1) VERTICAL WITHOUT STABILIZATION BY ROCKERY OR BY A STRUCTURAL RETAINING WALL.
16. ALL MANHOLE LADDERS SHALL BE FIRMLY ATTACHED AND EXTEND TO WITHIN 1' OF THE BOTTOM OF THE STRUCTURE.
17. APPROXIMATE LOCATIONS OF EXISTING UTILITIES HAVE BEEN OBTAINED FROM AVAILABLE RECORDS AND ARE SHOWN FOR CONVENIENCE. THE CONTRACTOR SHALL BE RESPONSIBLE FOR VERIFICATION OF EXISTING UTILITY LOCATIONS WHETHER OR NOT THESE UTILITIES ARE SHOWN ON THE PLANS. THE CONTRACTOR SHALL EXERCISE ALL CARE TO AVOID DAMAGE TO ANY UTILITY. IF CONFLICTS WITH EXISTING UTILITIES ARISE DURING CONSTRUCTION, THE CONTRACTOR SHALL NOTIFY THE CITY CONSTRUCTION INSPECTOR AND ANY CHANGES REQUIRED SHALL BE APPROVED BY THE PROJECT ENGINEER PRIOR TO COMMENCEMENT OF RELATED CONSTRUCTION ON THE PROJECT.
18. THE UNDERGROUND UTILITY LOCATION SERVICE SHALL BE CONTACTED FOR FIELD LOCATION OF EXISTING UTILITIES PRIOR TO ANY CONSTRUCTION. THE OWNER OR HIS REPRESENTATIVE SHALL BE CONTACTED IF A UTILITY CONFLICT EXISTS. FOR UTILITY LOCATION IN KING COUNTY, CALL 1-800-424-5555. THE CONTRACTOR IS RESPONSIBLE TO ENSURE THAT UTILITY LOCATES ARE MAINTAINED THROUGHOUT THE LIFE OF THE PROJECT.
19. THE CONTRACTOR SHALL VERIFY THE LOCATIONS, WIDTHS, THICKNESS, AND ELEVATIONS OF ALL EXISTING PAVEMENTS AND STRUCTURES THAT ARE TO INTERFACE WITH NEW WORK. PROVIDE ALL TRIMMING, CUTTING, SAW CUTTING, GRADING, LEVELING, SLOPING, COATING, AND OTHER WORK, INCLUDING MATERIALS AS NECESSARY, TO CAUSE THE INTERFACE WITH EXISTING WORKS TO BE PROPER, ACCEPTABLE TO THE ENGINEER AND THE CITY OF KIRKLAND, COMPLETE IN PLACE AND READY TO USE.
20. ALL INLET, MANHOLE, AND CATCH BASIN FRAMES AND GRATES SHALL NOT BE ADJUSTED TO GRADE UNTIL IMMEDIATELY PRIOR TO FINAL PAVING. ALL CATCH BASIN GRATES SHALL BE SET 0.10' BELOW PAVEMENT LEVEL.
21. OPEN CUT ROAD CROSSINGS FOR UTILITY TRENCHES ON EXISTING TRAVELED ROADWAY SHALL BE BACKFILLED ONLY WITH 5/8" MINUS CRUSHED ROCK AND MECHANICALLY COMPACTED (UNLESS OTHERWISE APPROVED BY THE CITY). FOR STREETS CLASSIFIED AS ARTERIALS OR COLLECTORS, BACKFILL FOR CROSSINGS SHALL BE CDF. CUTS INTO THE EXISTING ASPHALT SHALL BE NEAT LINE CUT WITH SAW OR JACKHAMMER IN A CONTINUOUS LINE. A TEMPORARY COLD MIX PATCH MUST BE PLACED IMMEDIATELY AFTER BACKFILL AND COMPACTION. A PERMANENT HOT MIX PATCH SHALL BE PLACED WITHIN 30 DAYS AND SHALL BE A MINIMUM OF 1" THICKER THAN THE ORIGINAL ASPHALT WITH A MINIMUM THICKNESS OF 2". SEE STANDARD D.02.
22. ALL DAMAGES INCURRED TO PUBLIC AND/OR PRIVATE PROPERTY BY THE CONTRACTOR.DURING THE COURSE OF CONSTRUCTION SHALL BE PROMPTLY REPAIRED TO THE SATISFACTION OF THE CITY CONSTRUCTION INSPECTOR BEFORE PROJECT APPROVAL AND/OR THE RELEASE OF THE PROJECT'S PERFORMANCE BOND.
23. GROUT ALL SEAMS AND OPENINGS IN ALL INLETS, CATCH BASINS, AND MANHOLES. JETSET GROUT IS NOT ALLOWED. WHEN WIDENING AN EXISTING ROADWAY WHERE AN EXISTING TYPE I CATCH BASIN WILL REMAIN IN THE TRAVEL LANE, THE EXISTING FRAME AND COVER SHALL BE REPLACED WITH A ROUND, LOCKING FRAME AND COVER PER CITY OF KIRKLAND STANDARD PLAN CK-D18.A.
24. RECYCLED CONCRETE SHALL NOT BE USED AROUND STORMWATER FACILITIES OR ANYWHERE ON THIS SITE.

PIPE - MATERIALS:

25. ACCEPTABLE TYPES PUBLICLY OWNED AND MAINTAINED CONVEYANCE SYSTEMS
    - A. PVC 3034
    - B. DUCTILE IRON
    - C. C900/C905
26. ALL PIPES SHALL HAVE A MINIMUM 18" OF PIPE COVER IN THE ROW OR PRIVATE DRIVES EXPOSED TO VEHICULAR TRAFFIC. IF PIPE COVER IS LESS THAN 18 INCHES THE PIPE SHALL BE DUCTILE IRON (CLASS 50) OR C-900. ALSO, ANY PIPES PROPOSED TO BE INSTALLED IN THE LOAD BEARING ZONE OF STRUCTURAL WALLS MUST BE PROTECTED BY A DUCTILE IRON (CLASS 50) SLEEVE. THE DESIGN OR USE OF DI SLEEVES MUST BE APPROVED BY THE CITY OF KIRKLAND DEPARTMENT OF PUBLIC WORKS.

CATCH BASIN/INLETS - GRATE SELECTION:

27. ALL FRAME AND COVERS SHALL BE LOCKABLE WITH A STANDARD 5/8" HEX DRIVE BOLT (EXCEPT ERGO FRAME AND COVER).

CATCH BASIN/INLETS - JOINTS:

28. TYPE I JOINTS SHALL BE NON-SHRINK GROUT.
29. TYPE II AND LARGER MANHOLES SHALL HAVE GASKETED JOINTS AND SHALL BE WATERTIGHT SEALED.
30. PVC AND OTHER PLASTIC PIPES REQUIRE A COUPLING ADAPTER MADE FOR THE PIPE TYPE AND CONCRETE JOINING.

CATCH BASIN/INLETS - CONSTRUCTION:

31. CATCH BASINS SHALL BE BEDDED IN CRUSHED SURFACING BASE COURSE.
32. ADJUSTMENTS OVER 2" TO GRADE SHALL BE WITH CONCRETE ADJUSTMENT RINGS.
33. ADJUSTMENTS UNDER 2" SHALL BE WITH CONCRETE OR NON-SHRINK GROUT.
34. FOR TYPE II CB'S WITH ECCENTRIC CONE TOP-SECTION, THE MAXIMUM ADJUSTMENT DISTANCE IS 12", NOT INCLUDING CASTING.
35. FOR TYPE II CB'S WITH FLAT-TOP, THE MAXIMUM ADJUSTMENT DISTANCE IS 12", NOT INCLUDING CASTING.
36. ALL CONNECTIONS TO STRUCTURES SHALL USE SAND COLLARS WITH NON-SHRINK GROUT (NO JET SET ALLOWED).
37. WOOD, ROCK, EXPANSION JOINT OR RED BRICK SHALL NOT BE USED AT ANY TIME. IF STANDARD GREY CONCRETE 2"X4"X8" BRICKS ARE USED THEY SHALL BE TOTALLY ENCAPSULATED WITH CONCRETE OR GROUT. THIS SHOULD APPLY TO ALL DRAWINGS.
38. ALL ADJUSTMENT RISERS SHALL BE GROUTED DOWN WITH NON-SHRINK GROUT OR PORTLAND CEMENT AND SAND MIXTURE. DRY STACKING IS NOT ALLOWED.

PAVING AND ROADWAY - PLAN NOTES

1. A PRE-CONSTRUCTION CONFERENCE SHALL BE HELD PRIOR TO THE START OF CONSTRUCTION. THE CONTRACTOR SHALL BE RESPONSIBLE FOR SECURING ALL NECESSARY PERMITS PRIOR TO CONSTRUCTION.
2. ALL ROADWAY WORK AND MATERIAL SHALL BE IN ACCORDANCE WITH THE CURRENT APWA AND CITY OF KIRKLAND STANDARDS AND SPECIFICATIONS.
3. ALL PUBLIC ROADWAYS SHALL BE CONSTRUCTED OF 4" CLASS "B" AC PAVING ON 6" ASPHALT-TREATED BASE (ATB) ON 4" MINIMUM OF 1-1/4" MINUS CRUSHED SURFACING BASE COURSE, UNLESS OTHERWISE APPROVED BY THE PUBLIC WORKS DEPARTMENT.
4. A COPY OF THE APPROVED ROADWAY PLANS MUST BE ON THE JOB SITE WHENEVER CONSTRUCTION IS IN PROGRESS.
5. DENSITY TEST REPORTS WILL BE REQUIRED FOR ALL PUBLIC ROADWAYS AND ALL PRIVATE ROADWAYS. ALL TRENCH BACKFILL SHALL BE COMPACTED TO 95 PERCENT DENSITY IN ROADWAYS, ROADWAY SHOULDERS, ROADWAY PRISM AND DRIVEWAYS, AND 85 PERCENT DENSITY IN UNPAVED AREAS. ALL PIPE ZONE COMPACTION SHALL BE 95 PERCENT.
6. ALL COMMERCIAL AND RESIDENTIAL DRIVEWAYS MUST CONFORM TO THE CITY OF KIRKLAND DEPARTMENT OF PUBLIC WORKS DRIVEWAY POLICY.
7. ALL CONCRETE FOR SIDEWALKS AND CURB AND GUTTER MUST BE 4,000 PSI MINIMUM. (5-3/4 SACK MIX.)
8. ANY ROADWAY SIGNAGE OR STRIPING REMOVED OR TEMPORARILY MOVED BY THE CONTRACTOR SHALL BE RESTORED SO AS TO MEET THE CURRENT CITY OF KIRKLAND STANDARDS.
9. IT IS THE RESPONSIBILITY OF THE CONTRACTOR TO PROVIDE ADEQUATE TEMPORARY TRAFFIC CONTROL TO ENSURE TRAFFIC SAFETY DURING CONSTRUCTION ACTIVITIES. THEREFORE, THE CONTRACTOR SHALL SUBMIT A TRAFFIC CONTROL PLAN TO THE PUBLIC WORKS DEPARTMENT PRIOR TO STARTING WORK. ALL TRAFFIC CONTROL DEVICES SHALL CONFORM TO THE "MANUAL ON UNIFORM TRAFFIC CONTROL DEVICES" (MUTCD) OR AS MODIFIED BY THE TRAFFIC ENGINEER.
10. SIDEWALK AND CURB AND GUTTER CANNOT BE POURED MONOLITHICALLY. THERE MUST BE A COLD JOINT OR FULL-DEPTH EXPANSION JOINT BETWEEN THEM.
11. NOT USED.
12. ANY EXISTING PUBLIC IMPROVEMENTS DAMAGED DURING CONSTRUCTION SHALL BE REPLACED PRIOR TO FINAL INSPECTION.
13. THE CONTRACTOR IS RESPONSIBLE FOR KEEPING ALL PUBLIC STREETS FREE FROM MUD AND DEBRIS AT ALL TIMES. THE CONTRACTOR SHALL BE PREPARED TO USE POWER SWEEPERS OR OTHER PIECES OF EQUIPMENT NECESSARY TO KEEP THE ROADWAYS CLEAN.
14. BACKFILL IN ALL STREET CUTS ON ARTERIALS WILL BE CONTROL DENSITY FILL (CDF). CONTRACTOR MUST PROVIDE STEEL PLATING NECESSARY TO ALLOW THE CDF TO CURE.
15. WHEN CONSTRUCTING NEW CURB AND GUTTER WHICH DOES NOT ALIGN WITH THE EXISTING EDGE OF PAVEMENT, THE ROADWAY MUST BE TAPERED FROM THE ENDS OF THE NEW CURB AND GUTTER TO MATCH THE EXISTING PAVEMENT. THE ENTRY TAPER INTO THE NEW IMPROVEMENTS SHALL BE 5:1, AND LEAVING THE NEW IMPROVEMENTS SHALL BE 10:1.
16. RESTORATION OF CUTS IN EXISTING PAVEMENT SHALL INCLUDE A T-CUT WITH A SAWCUT AND SEAL A MINIMUM OF 12 INCHES BEYOND THE TRENCH LIMITS PER PLAN NO. CK-D.02.

FIBER OPTIC CONDUIT NOTES

1. MAINTAIN REQUIRED CLEARANCES FROM OTHER UTILITIES. NOTIFY ENGINEER IF INSUFFICIENT CLEARANCE IS AVAILABLE.
2. INSTALL CONTINUOUS 4" WIDE METALLIC DETECTABLE WARNING TAPE ABOVE ALL CONDUIT. COMMUNICATIONS CABLE WARNING TAPE SHALL BE ORANGE AND LABELED WITH "CAUTION, BURIED FIBER BELOW" .
3. PROVIDE A GROUND IN EACH HAND HOLE.
4. INSTALL CONTINUOUS #10 AWG LOCATE WIRE IN EACH CONDUIT TRENCH. TERMINATE THE LOCATE WIRE TO THE GROUND ROD IN THE HAND HOLE.
5. CONDUIT BENDS SHALL BE 36" RADIUS MINIMUM, AND LIMIT BENDS TO 270 DEGREES CUMULATIVE BETWEEN HAND HOLES OR PULL BOXES.

berger PARTNERSHIP
1927 Post Alley, Ste. 2
Seattle, WA 98101
206.325.6877
bergerpartnership.com

ch2m:

Totem Lake Park Phase 1

City of Kirkland

12031 Totem Lake Way, Kirkland, WA 98034

11-20-2019

SET TYPE:
BID SET

SET ISSUE DATE:
9/13/2019

REVISIONS:

DRAWN/CHECKED:
DRW / CHK

SHEET NAME:
CIVIL GENERAL NOTES

SHEET NUMBER:
C002

Berger Partnership Project Number: XXXXXXX.XX Plotted: 11.25.2019 9:48 AM By: Luehrs, Teresa/CCG Filename: c:\pw_workdir\den003\ch2mhill_tluehrs\dms97542\c002_694933.dwg

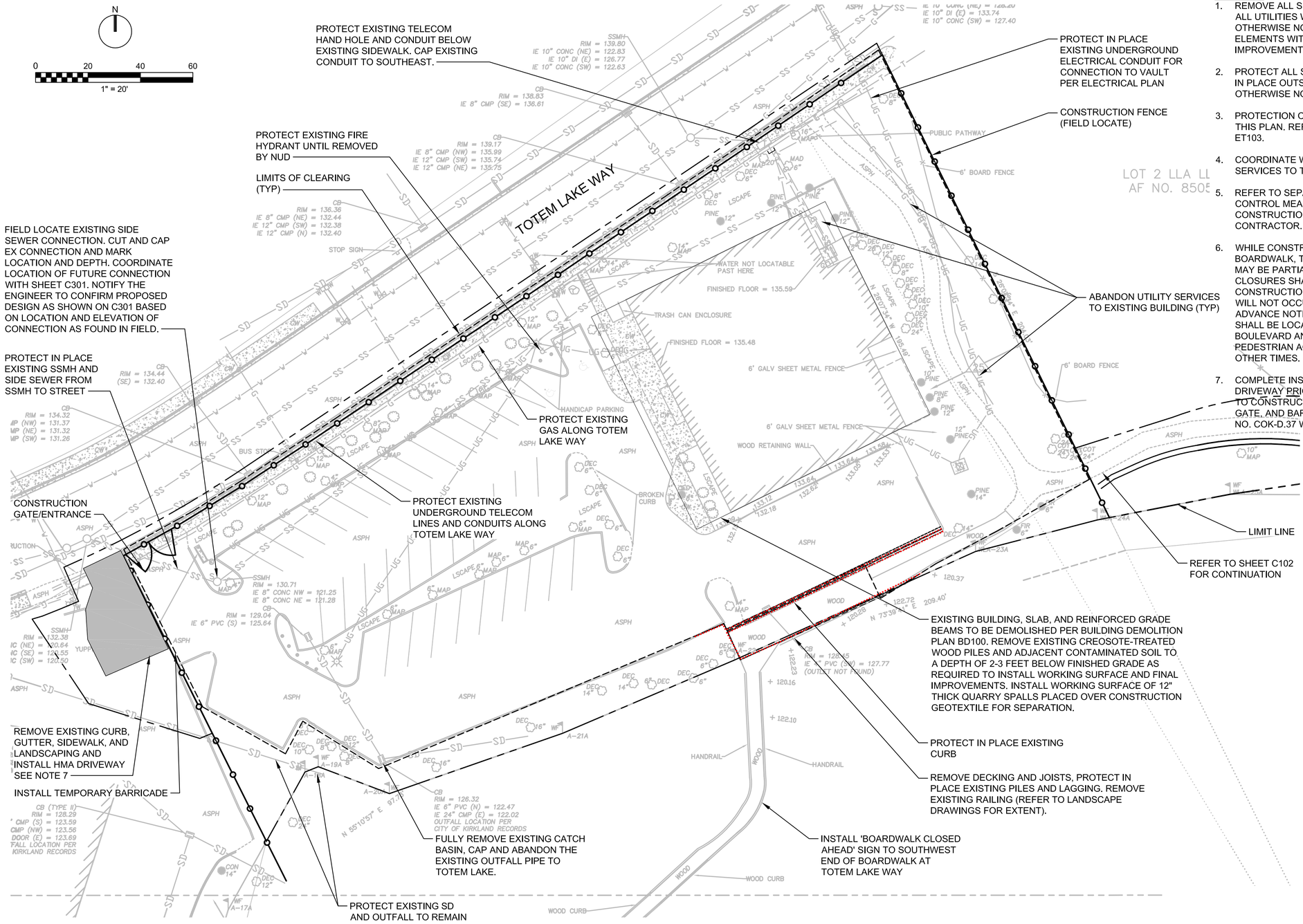

SITE PREPARATION PLAN

1" = 20'

NOTES:

1. REMOVE ALL SURFACE FEATURES, PAVEMENTS, AND ABANDON ALL UTILITIES WITHIN THE LIMITS OF CLEARING UNLESS OTHERWISE NOTED. DEMOLISH UTILITIES AND FOUNDATION ELEMENTS WITHIN THE LIMITS OF WORK THAT CONFLICT WITH IMPROVEMENTS, UNLESS OTHERWISE NOTED.
2. PROTECT ALL SURFACE FEATURES, PAVEMENTS, AND UTILITIES IN PLACE OUTSIDE THE LIMITS OF CLEARING UNLESS OTHERWISE NOTED.
3. PROTECTION OR REMOVAL OF VEGETATION NOT SHOWN ON THIS PLAN. REFER TO LANDSCAPE PLANS ET101, ET102, AND ET103.
4. COORDINATE WITH UTILITY PROVIDERS TO DEMOLISH UTILITY SERVICES TO THE EXISTING BUILDING.
5. REFER TO SEPARATE TESC PLAN FOR EROSION AND SEDIMENT CONTROL MEASURES TO BE IMPLEMENTED DURING CONSTRUCTION. CESC/SWPPP WILL BE TRANSFERRED TO THE CONTRACTOR.
6. WHILE CONSTRUCTING THE EASTERN PORTION OF THE NEW BOARDWALK, THE CROSS KIRKLAND CORRIDOR (CKC) TRAIL MAY BE PARTIALLY CLOSED FOR CONSTRUCTION ACCESS. CLOSURES SHALL NOT EXCEED 60 DAYS TOTAL IN THE CONSTRUCTION PERIOD AND CLOSURES OF 1-2 HOURS PER DAY WILL NOT OCCUR MORE THAN 2 DAYS PER WEEK. PROVIDE ADVANCE NOTICE PRIOR TO ANY CLOSURE, AND SIGNAGE SHALL BE LOCATED ACROSS THE CKC AT TOTEM LAKE BOULEVARD AND 128TH LANE NE. PROVIDE MARKED PEDESTRIAN ACCESS ON THE SOUTH SIDE OF THE TRAIL AT ALL OTHER TIMES.
7. COMPLETE INSTALLATION OF CAFE VELOCE TEMPORARY DRIVEWAY PRIOR TO REMOVAL OF EXISTING GATE AND PRIOR TO CONSTRUCTION OF TEMPORARY FENCING, CONSTRUCTION GATE, AND BARRICADE. CONSTRUCT HMA DRIVEWAY PER PLAN NO. COK-D.37 WITH 3" HMA OVER 4" CRUSHED ROCK BASE.

PARTNERSHIP berger
1927 Post Alley, Ste. 2
Seattle, WA 98101
206 325 6877
bergerpartnership.com
ch2m

Totem Lake Park Phase 1

City of Kirkland

12031 Totem Lake Way, Kirkland, WA 98034

JESSE WILLIAMS STATE OF WASHINGTON 45577 REGISTERED PROFESSIONAL ENGINEER
11-20-2019

SET TYPE:
BID SET

SET ISSUE DATE:
9/13/2019

REVISIONS:

DRAWN/CHECKED:
DRW / CHK

SHEET NAME:
SITE PREPARATION PLAN - PARK

SHEET NUMBER:
C101

Berger Partnership Project Number: XXXXXXXX.XX Plotted: 11.26.2019 9:55 AM By: Luehrs, Teresa/CCG Filename: c:\pw_workdir\den003\ch2mhill_lluehrs\dms97542\c101_694933.dwg

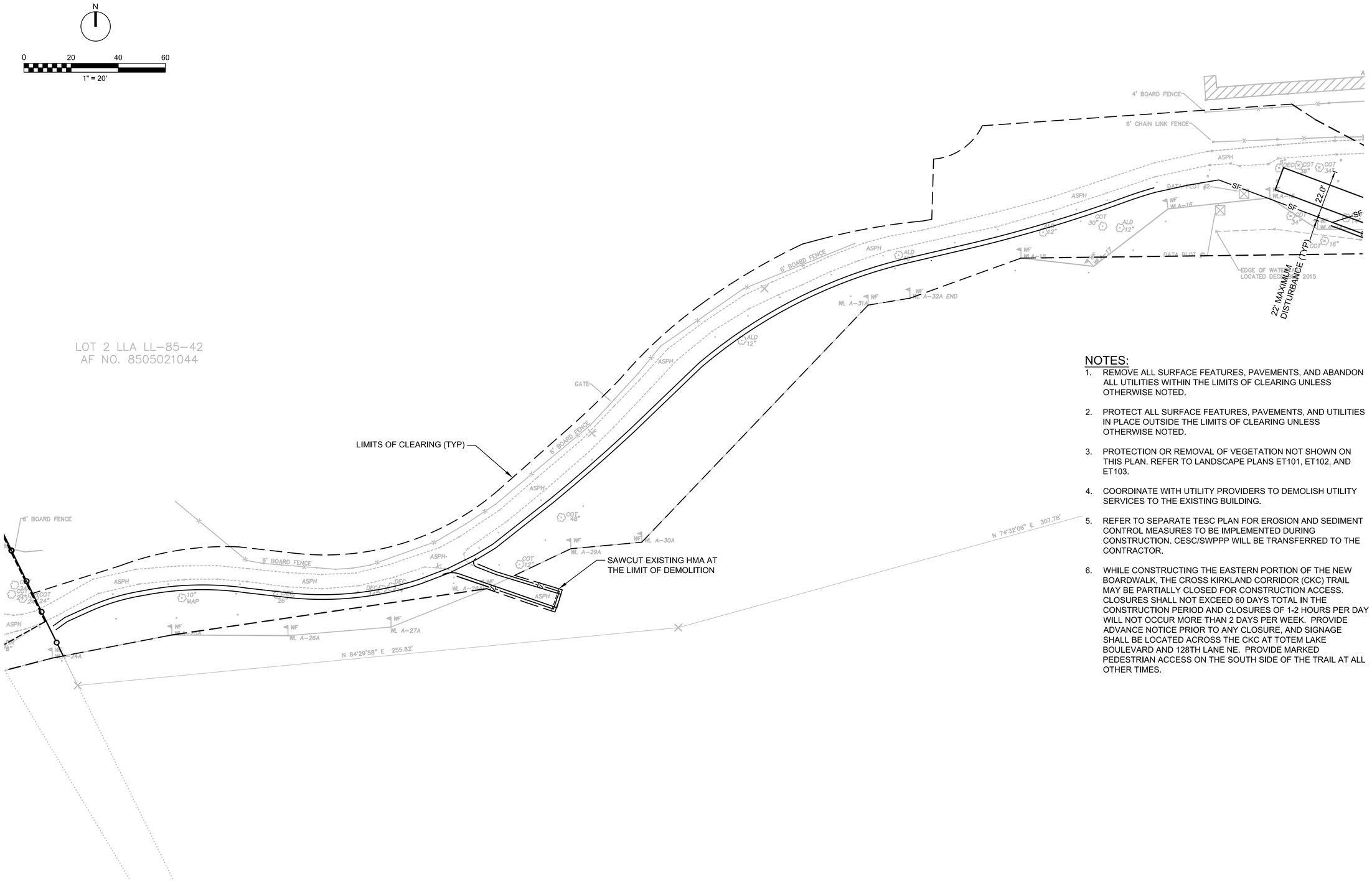

NOTES:

1. REMOVE ALL SURFACE FEATURES, PAVEMENTS, AND ABANDON ALL UTILITIES WITHIN THE LIMITS OF CLEARING UNLESS OTHERWISE NOTED.
2. PROTECT ALL SURFACE FEATURES, PAVEMENTS, AND UTILITIES IN PLACE OUTSIDE THE LIMITS OF CLEARING UNLESS OTHERWISE NOTED.
3. PROTECTION OR REMOVAL OF VEGETATION NOT SHOWN ON THIS PLAN. REFER TO LANDSCAPE PLANS ET101, ET102, AND ET103.
4. COORDINATE WITH UTILITY PROVIDERS TO DEMOLISH UTILITY SERVICES TO THE EXISTING BUILDING.
5. REFER TO SEPARATE TESC PLAN FOR EROSION AND SEDIMENT CONTROL MEASURES TO BE IMPLEMENTED DURING CONSTRUCTION. CESC/SWPPP WILL BE TRANSFERRED TO THE CONTRACTOR.
6. WHILE CONSTRUCTING THE EASTERN PORTION OF THE NEW BOARDWALK, THE CROSS KIRKLAND CORRIDOR (CKC) TRAIL MAY BE PARTIALLY CLOSED FOR CONSTRUCTION ACCESS. CLOSURES SHALL NOT EXCEED 60 DAYS TOTAL IN THE CONSTRUCTION PERIOD AND CLOSURES OF 1-2 HOURS PER DAY WILL NOT OCCUR MORE THAN 2 DAYS PER WEEK. PROVIDE ADVANCE NOTICE PRIOR TO ANY CLOSURE, AND SIGNAGE SHALL BE LOCATED ACROSS THE CKC AT TOTEM LAKE BOULEVARD AND 128TH LANE NE. PROVIDE MARKED PEDESTRIAN ACCESS ON THE SOUTH SIDE OF THE TRAIL AT ALL OTHER TIMES.

SITE PREPARATION PLAN - TRAIL

1" = 20'

PARTNERSHIP berger
1927 Post Alley, Ste. 2
Seattle, WA 98101
206 325 6877
bergerpartnership.com

ch2m

Totem Lake Park Phase 1

City of Kirkland

12031 Totem Lake Way, Kirkland, WA 98034

WILLIAMS JESSICA R. STATE OF WASHINGTON 45577 REGISTERED PROFESSIONAL ENGINEER
11-20-2019

SET TYPE:
BID SET

SET ISSUE DATE:
9/13/2019

REVISIONS:

DRAWN/CHECKED:
DRW / CHK

SHEET NAME:
SITE PREPARATION PLAN - TRAIL

SHEET NUMBER:
C102

Berger Partnership Project Number: XXXXXXXX.XX Revised: 11.25.2019 10:13 AM By: Luehrs, Teresa/CCG Filename: c:\pw_workdir\den003\ch2mhill_tluehrs\dms97542\c102_694933.dwg

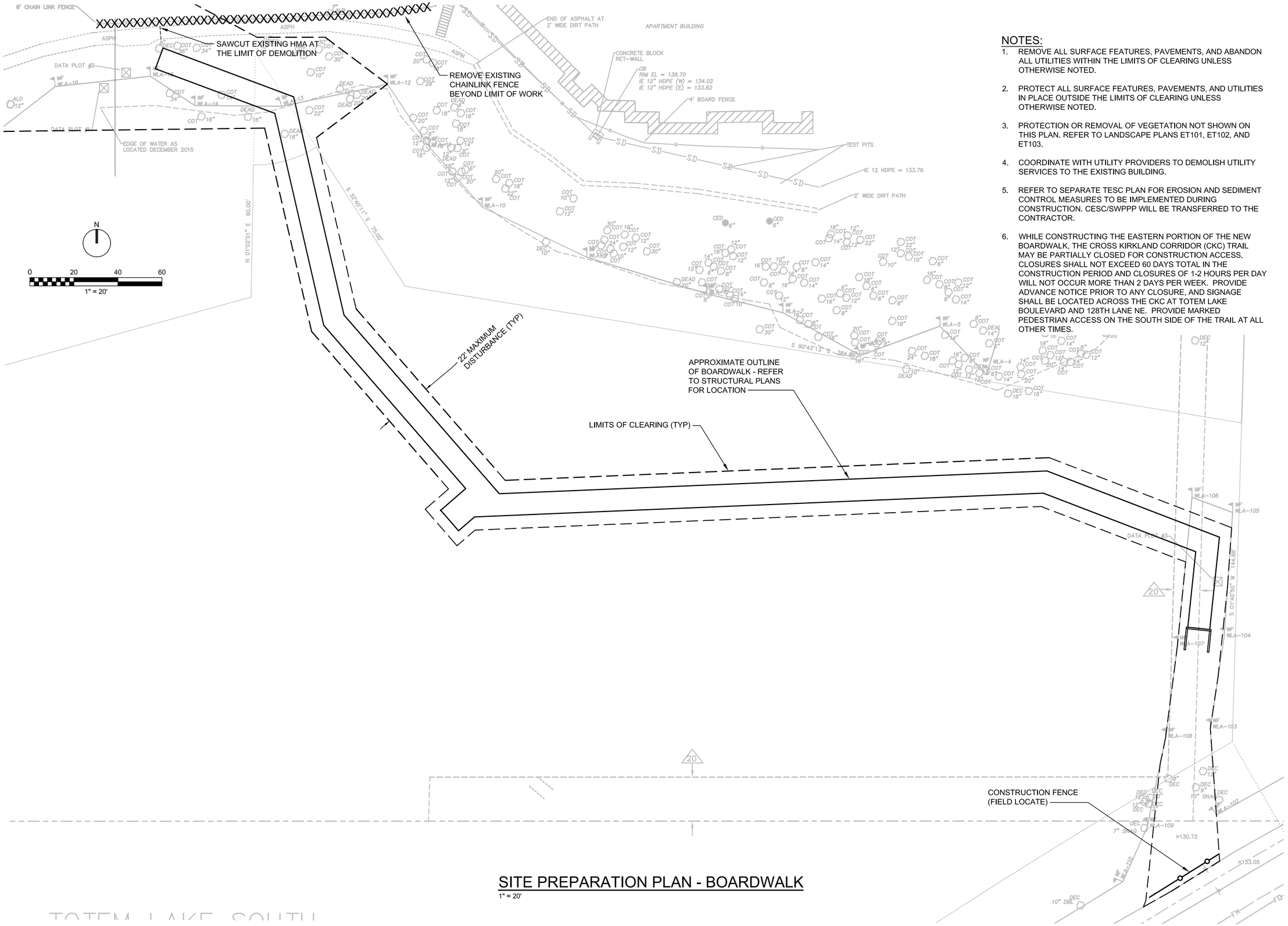

SITE PREPARATION PLAN - BOARDWALK

1" = 20'

NOTES:

1. REMOVE ALL SURFACE FEATURES, PAVEMENTS, AND ABANDON ALL UTILITIES WITHIN THE LIMITS OF CLEARING UNLESS OTHERWISE NOTED.
2. PROTECT ALL SURFACE FEATURES, PAVEMENTS, AND UTILITIES IN PLACE OUTSIDE THE LIMITS OF CLEARING UNLESS OTHERWISE NOTED.
3. PROTECTION OR REMOVAL OF VEGETATION NOT SHOWN ON THIS PLAN. REFER TO LANDSCAPE PLANS ET101, ET102, AND ET103.
4. COORDINATE WITH UTILITY PROVIDERS TO DEMOLISH UTILITY SERVICES TO THE EXISTING BUILDING.
5. REFER TO SEPARATE TESC PLAN FOR EROSION AND SEDIMENT CONTROL MEASURES TO BE IMPLEMENTED DURING CONSTRUCTION. CESC/SWPPP WILL BE TRANSFERRED TO THE CONTRACTOR.
6. WHILE CONSTRUCTING THE EASTERN PORTION OF THE NEW BOARDWALK, THE CROSS KIRKLAND CORRIDOR (CKC) TRAIL MAY BE PARTIALLY CLOSED FOR CONSTRUCTION ACCESS. CLOSURES SHALL NOT EXCEED 60 DAYS TOTAL IN THE CONSTRUCTION PERIOD AND CLOSURES OF 1-2 HOURS PER DAY WILL NOT OCCUR MORE THAN 2 DAYS PER WEEK. PROVIDE ADVANCE NOTICE PRIOR TO ANY CLOSURE, AND SIGNAGE SHALL BE LOCATED ACROSS THE CKC AT TOTEM LAKE BOULEVARD AND 128TH LANE NE. PROVIDE MARKED PEDESTRIAN ACCESS ON THE SOUTH SIDE OF THE TRAIL AT ALL OTHER TIMES.

PARTNERSHIP berger
1927 Post Alley, Ste. 2
Seattle, WA 98101
206 325 6877
bergerpartnership.com

ch2m

Totem Lake Park Phase 1

City of Kirkland

12031 Totem Lake Way, Kirkland, WA 98034

JESSE WILLIAMS STATE OF WASHINGTON 45579 REGISTERED PROFESSIONAL ENGINEER

11-20-2019

SET TYPE:
BID SET

SET ISSUE DATE:
9/13/2019

REVISIONS:

DRAWN/CHECKED:
DRW / CHK

SHEET NAME:
SITE PREPARATION PLAN - BOARDWALK

SHEET NUMBER:
C103

Berger Partnership Project Number: XXXXXXXX.XX Printed: 11.26.2019 8:46 AM By: Luehrs, Teresa/CCG Filename: c:\pw_workdir\dan003\ch2mhill_lluehrs\dms97542\c103_694933.dwg

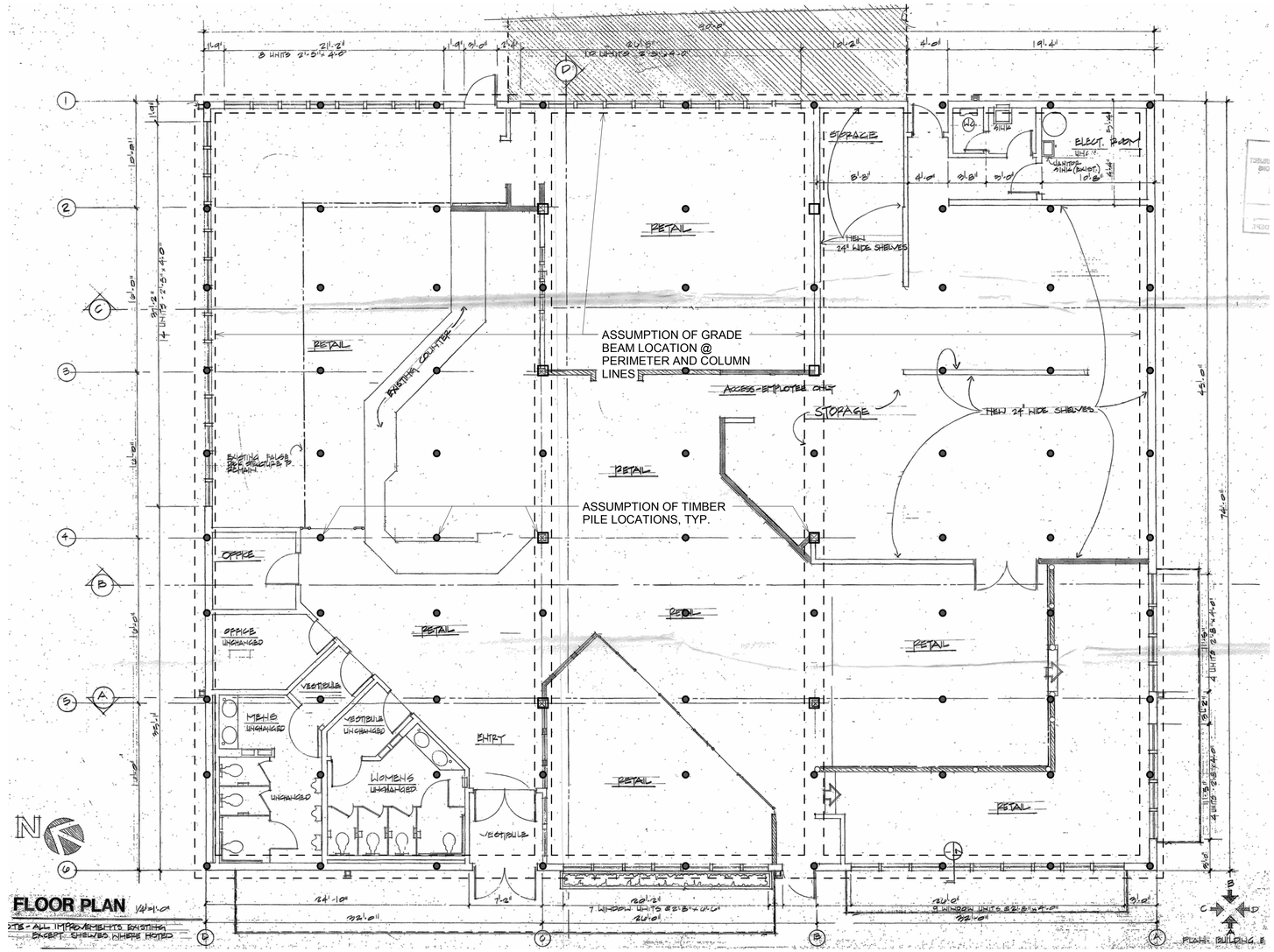

DEMOLITION NOTES:

- THE EXISTING STRUCTURE KNOWN AS THE "YUPPIE PAWN SHOP" IS TO BE DEMOLISHED IN CONJUNCTION WITH THE ADJACENT SITEWORK. THE BUILDING IS AN APPROXIMATELY 6,660 SF, WOOD FRAMED STRUCTURE THAT PREVIOUSLY SERVED AS A RESTAURANT AND RETAIL SPACE.
- THERE ARE NO RECORD DRAWINGS FOR THE BUILDING OTHER THAN THE PLAN SHOWN. REFER TO PHOTOS FOR THE BUILDING VOLUME AND HEIGHT.
- REFER TO SPECIFICATION SECTION 02 41 00 – DEMOLITION FOR ADDITIONAL REQUIREMENTS.
- REFER TO SECTION 01 74 19 - CONSTRUCTION WASTE MANAGEMENT FOR SALVAGE AND RECYCLING REQUIREMENTS.
- REFER TO ADDITIONAL DEMOLITION NOTES AND COORDINATION REQUIRED ON STRUCTURAL, LANDSCAPE, AND CIVIL DRAWINGS AND SPECIFICATIONS.
- PROTECT ANY VEGETATION AND SITE FEATURES SCHEDULED TO REMAIN.
- ABANDON ALL BUILDING UTILITIES. THIS INCLUDES, BUT IS NOT LIMITED TO POWER, DATA, AND WATER SERVICE. COORDINATE WITH THE APPROPRIATE UTILITY COMPANIES AS NECESSARY.
- DEMOLISH THE EXISTING FOUNDATIONS AS REQUIRED. THE BUILDING IS ASSUMED TO BE SUPPORTED ON GRADE BEAMS WITH STEEL AT PERIMETER AND COLUMN LINES. GRADE BEAMS AND SLABS SUPPORTED WITH 12"Ø CREOSOTE TIMBER PILES SPACED AT APPROXIMATELY 10' - 0" O.C., ASSUME 15' - 20' DEEP.
- REFER TO REPORT FROM ASSOCIATED EARTH SCIENCES AND CIVIL ENGINEERS FOR FULL REMOVAL.
- REFER TO HAZARDOUS MATERIALS REPORT.
- THE CONTRACTOR SHALL BE RESPONSIBLE FOR VISITING THE PROPERTY AND VERIFYING THE EXISTING BUILDING CONDITIONS PRIOR TO PROVIDING A BID.

PARTNERSHIP berger
1927 Post Alley, Ste. 2
Seattle, WA 98101
206 325 6877
bergerpartnership.com

INNOVA architects
950 Pacific Avenue, Suite 450
Tacoma, WA 98402
253-572-4903

Totem Lake Park Phase 1

City of Kirkland

12031 Totem Lake Way, Kirkland, WA 98034

8404 REGISTERED ARCHITECT
GEOFFREY E. ANDERSON
STATE OF WASHINGTON

SET TYPE:
Bid Set

SET ISSUE DATE:
9/13/2019

REVISIONS:

Δ	DESCRIPTION	DATE

DRAWN/CHECKED:
GO GEA

SHEET NAME:
BUILDING DEMOLITION

SHEET NUMBER:
BD100

Berger Partnership Project Number: XXXXXXXX.XX Plotted: 08.18.2011 5:18 PM By: Gennadiy Ogay Filename: p:\2017\17-116 totem lake splash pad (berger)\drawings\acad-totem lake park-ph1 - title block.dwg

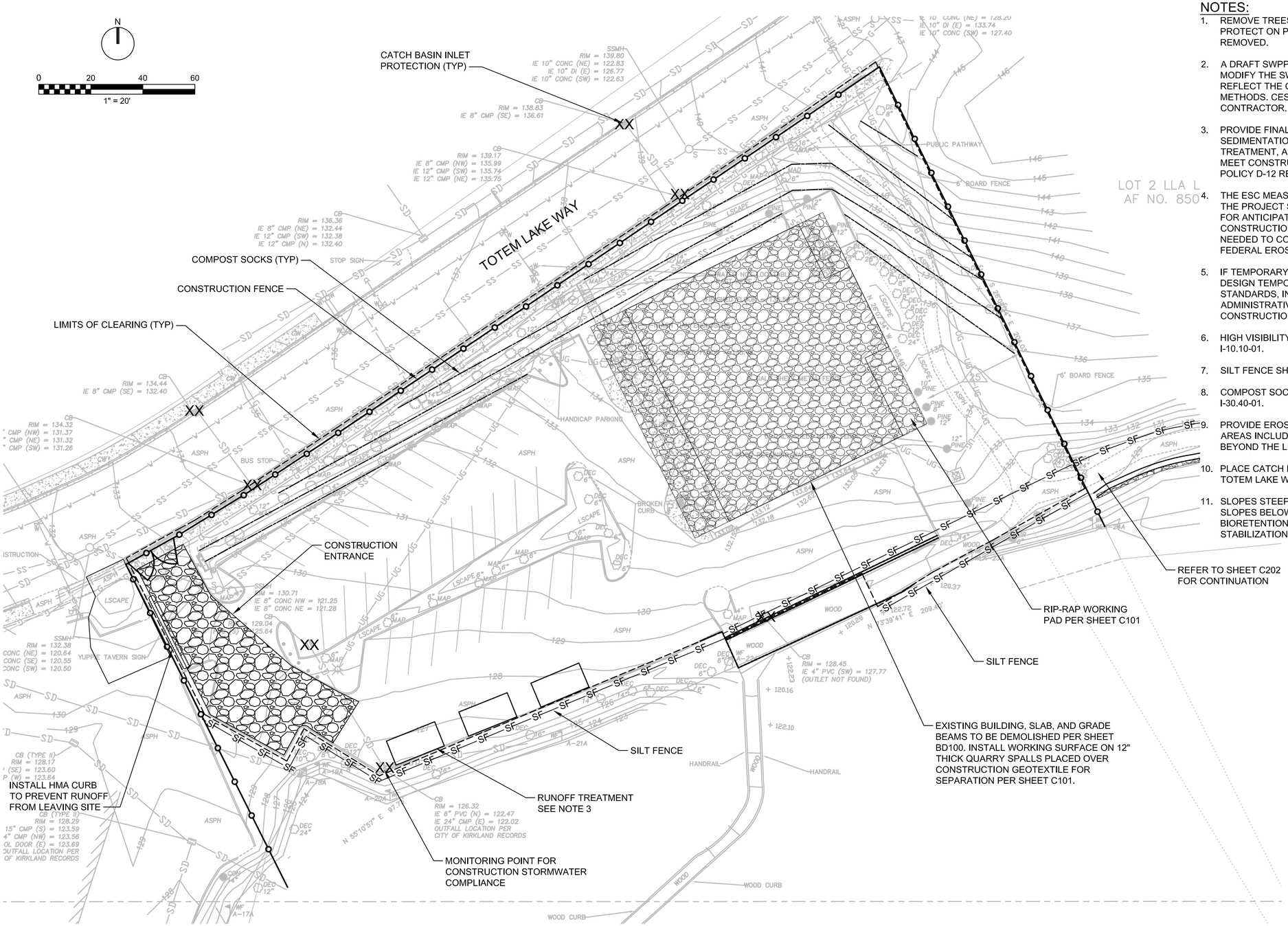

NOTES:

1. REMOVE TREES AS INDICATED ON TREE REMOVAL PLAN - PROTECT ON PLACE ALL OTHER TREES NOT INDICATED TO BE REMOVED.
2. A DRAFT SWPPP HAS BEEN PREPARED. CONTRACTOR SHALL MODIFY THE SWPPP AND THE ESC PLANS AS NEEDED TO REFLECT THE CONSTRUCTION SEQUENCE, MEANS AND METHODS. CESC/SWPPP WILL BE TRANSFERRED TO THE CONTRACTOR.
3. PROVIDE FINAL SWPPP, CONSTRUCTION EROSION AND SEDIMENTATION CONTROL LEAD, COVER MEASURES, RUNOFF TREATMENT, AND ALL OTHER MEASURES AS NECESSARY TO MEET CONSTRUCTION GENERAL PERMIT AND CITY OF KIRKLAND POLICY D-12 REQUIREMENTS.
4. THE ESC MEASURES SHOWN ON THIS PLAN AND DESCRIBED IN THE PROJECT SPECIFICATIONS ARE MINIMUM REQUIREMENTS FOR ANTICIPATED SITE CONDITIONS. DURING THE CONSTRUCTION PERIOD, UPGRADE THESE MEASURES AS NEEDED TO COMPLY WITH ALL APPLICABLE LOCAL, STATE, AND FEDERAL EROSION AND SEDIMENT CONTROL REGULATIONS.
5. IF TEMPORARY SHORING IS REQUIRED, CONTRACTOR SHALL DESIGN TEMPORARY SHORING PER APPLICABLE CODES AND STANDARDS, INCLUDING BUT NOT LIMITED TO WASHINGTON ADMINISTRATIVE CODE SAFETY STANDARDS FOR CONSTRUCTION WORK.
6. HIGH VISIBILITY FENCE SHALL BE PER WSDOT STANDARD PLAN I-10.10-01.
7. SILT FENCE SHALL BE PER WSDOT STANDARD PLAN I-30.10-02.
8. COMPOST SOCKS SHALL BE PER WSDOT STANDARD PLAN I-30.40-01.
9. PROVIDE EROSION CONTROL MEASURES FOR ALL DISTURBED AREAS INCLUDING STAGING, ACCESS, AND PARKING AREAS BEYOND THE LIMITS SHOWN ON THIS PLAN.
10. PLACE CATCH BASIN INSERT IN NEXT DOWNSTREAM INLET IN TOTEM LAKE WAY.
11. SLOPES STEEPER THAN 4:1 (HORIZONTAL:VERTICAL), INCLUDING SLOPES BELOW THE WATER STORAGE AREA IN THE BIORETENTION CELLS, SHALL BE STABILIZED PER SLOPE STABILIZATION DETAIL 1 ON CD101.

LEGEND:

- LIMITS OF CLEARING
- TEMPORARY CONSTRUCTION FENCE
- COMPOST SOCKS
- XX CATCH BASIN INSERT

CESC PLAN

1" = 20'

PARTNERSHIP berger
1927 Post Alley, Ste. 2
Seattle, WA 98101
206 325 6877
bergerpartnership.com

ch2m

Totem Lake Park Phase 1

City of Kirkland

12031 Totem Lake Way, Kirkland, WA 98034

JESSE WILLIAMS STATE OF WASHINGTON 45577 REGISTERED PROFESSIONAL ENGINEER
11-20-2019

SET TYPE:
BID SET

SET ISSUE DATE:
9/13/2019

REVISIONS:

DRAWN/CHECKED:
DRW / CHK

SHEET NAME:
CESC PLAN - PARK

SHEET NUMBER:
C201

Berger Partnership Project Number: XXXXXXXX.XX Plotted: 11.26.2019 8:56 AM By: Luehrs, Teresa/CCG Filename: c:\pw_workdir\den003\ch2mhill_llluehrs\dms97542\c201_694933.dwg

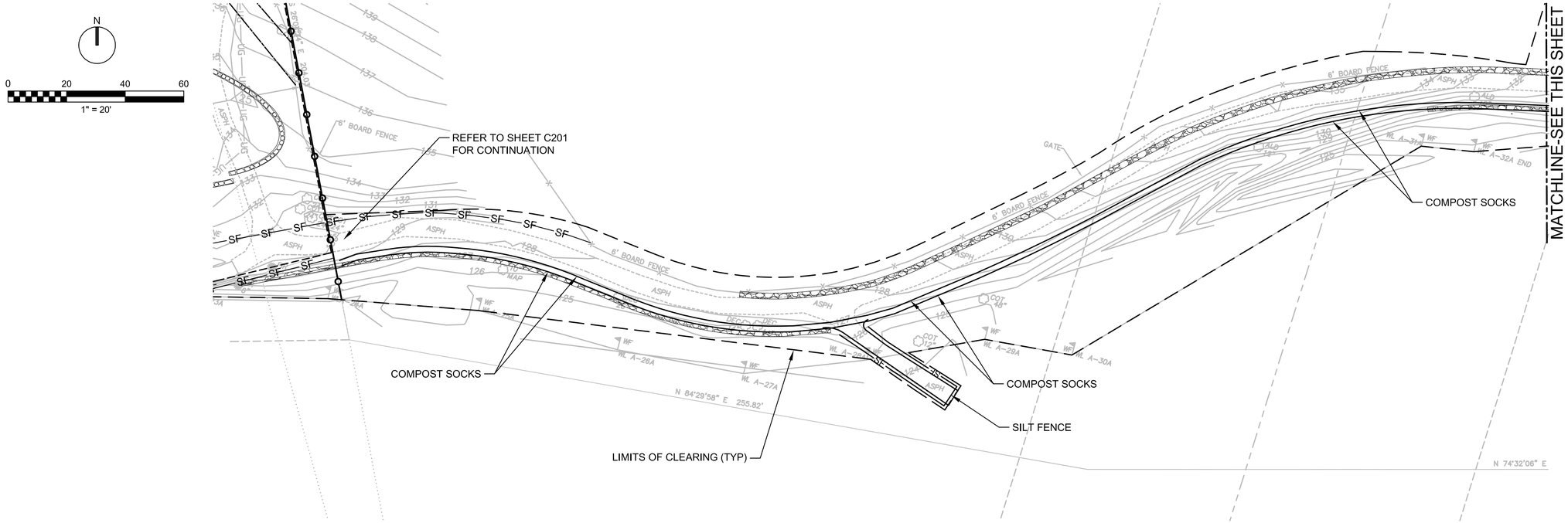

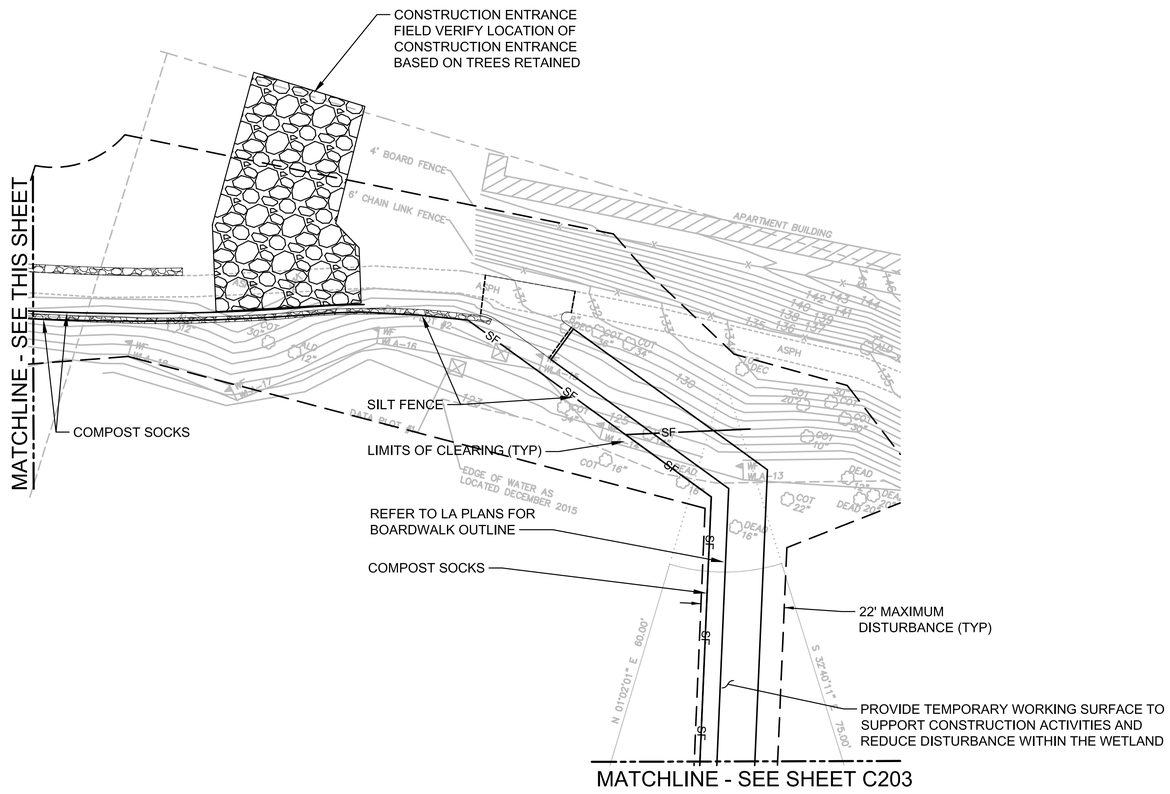

CESC PLAN

1" = 20'

NOTES:

1. REMOVE TREES AS INDICATED ON TREE REMOVAL PLAN - PROTECT IN PLACE ALL OTHER TREES NOT INDICATED TO BE REMOVED.
2. A DRAFT SWPPP HAS BEEN PREPARED. CONTRACTOR SHALL MODIFY THE SWPPP AND THE ESC PLANS AS NEEDED TO REFLECT THE CONSTRUCTION SEQUENCE, MEANS AND METHODS. CESC/SWPPP WILL BE TRANSFERRED TO THE CONTRACTOR.
3. PROVIDE FINAL SWPPP, CONSTRUCTION EROSION AND SEDIMENTATION CONTROL LEAD, COVER MEASURES, RUNOFF TREATMENT, AND ALL OTHER MEASURES AS NECESSARY TO MEET CONSTRUCTION GENERAL PERMIT AND CITY OF KIRKLAND POLICY D-12 REQUIREMENTS.
4. THE ESC MEASURES SHOWN ON THIS PLAN AND DESCRIBED IN THE PROJECT SPECIFICATIONS ARE MINIMUM REQUIREMENTS FOR ANTICIPATED SITE CONDITIONS. DURING THE CONSTRUCTION PERIOD, UPGRADE THESE MEASURES AS NEEDED TO COMPLY WITH ALL APPLICABLE LOCAL, STATE, AND FEDERAL EROSION AND SEDIMENT CONTROL REGULATIONS.
5. IF TEMPORARY SHORING IS REQUIRED, CONTRACTOR SHALL DESIGN TEMPORARY SHORING PER APPLICABLE CODES AND STANDARDS, INCLUDING BUT NOT LIMITED TO WASHINGTON ADMINISTRATIVE CODE SAFETY STANDARDS FOR CONSTRUCTION WORK.
6. HIGH VISIBILITY FENCE SHALL BE PER WSDOT STANDARD PLAN I-10.10-01.
7. SILT FENCE SHALL BE PER WSDOT STANDARD PLAN I-30.10-02.
8. COMPOST SOCKS SHALL BE PER WSDOT STANDARD PLAN I-30.40-01.
9. PROVIDE EROSION CONTROL MEASURES FOR ALL DISTURBED AREAS INCLUDING STAGING, ACCESS, AND PARKING AREAS BEYOND THE LIMITS SHOWN ON THIS PLAN.
10. PLACE CATCH BASIN INSERT IN NEXT DOWNSTREAM INLET IN TOTEM LAKE WAY.
11. REFER TO SHEET L203 FOR A DESCRIPTION OF ALLOWABLE IMPACTS.
12. SLOPES STEEPER THAN 4:1 (HORIZONTAL:VERTICAL), INCLUDING SLOPES BELOW THE WATER STORAGE AREA IN THE BIORETENTION CELLS, SHALL BE STABILIZED PER SLOPE STABILIZATION DETAIL 1 ON SHEET CD101.

PARTNERSHIP berger
1927 Post Alley, Ste. 2
Seattle, WA 98101
206 325 6877
bergerpartnership.com

ch2m

Totem Lake Park Phase 1

City of Kirkland

12031 Totem Lake Way, Kirkland, WA 98034

WILLIAMS, JESSE A. STATE OF WASHINGTON 45577 REGISTERED PROFESSIONAL ENGINEER
11-20-2019

SET TYPE:
BID SET

SET ISSUE DATE:
9/13/2019

REVISIONS:

DRAWN/CHECKED:
DRW / CHK

SHEET NAME:
CESC PLAN - TRAIL

SHEET NUMBER:
C202

Berger Partnership Project Number: XXXXXXXX.XX Plotted: 11.26.2019 9:02 AM By: Luehrs, Teresa/CCG Filename: c:\pw_workdir\den003\ch2mhill_l\luehrs\dms97542\c202_694933.dwg

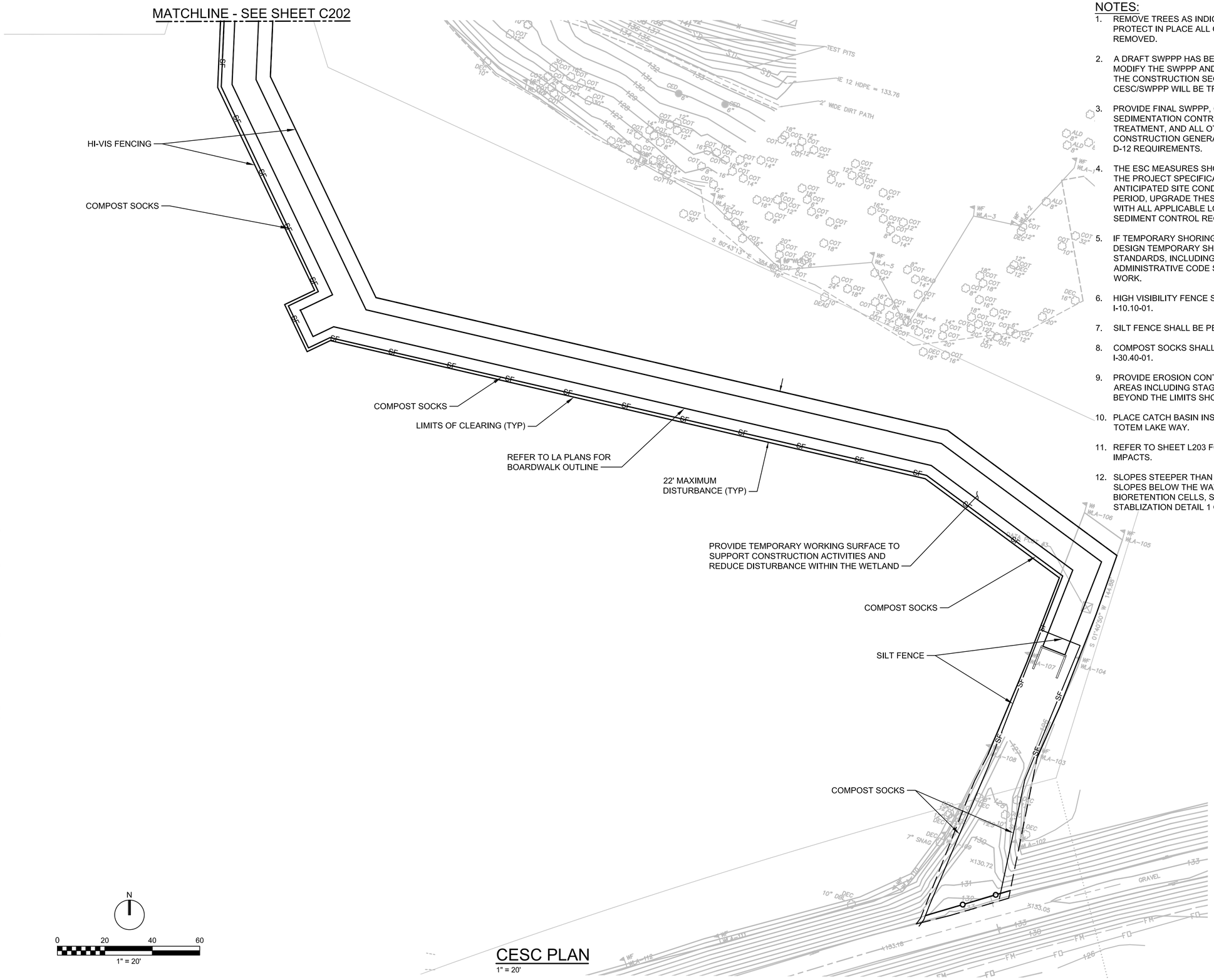

CESC PLAN

1" = 20'

NOTES:

1. REMOVE TREES AS INDICATED ON TREE REMOVAL PLAN - PROTECT IN PLACE ALL OTHER TREES NOT INDICATED TO BE REMOVED.
2. A DRAFT SWPPP HAS BEEN PREPARED. CONTRACTOR SHALL MODIFY THE SWPPP AND THE ESC PLANS AS NEEDED TO REFLECT THE CONSTRUCTION SEQUENCE, MEANS AND METHODS. CESC/SWPPP WILL BE TRANSFERRED TO THE CONTRACTOR.
3. PROVIDE FINAL SWPPP, CONSTRUCTION EROSION AND SEDIMENTATION CONTROL LEAD, COVER MEASURES, RUNOFF TREATMENT, AND ALL OTHER MEASURES AS NECESSARY TO MEET CONSTRUCTION GENERAL PERMIT AND CITY OF KIRKLAND POLICY D-12 REQUIREMENTS.
4. THE ESC MEASURES SHOWN ON THIS PLAN AND DESCRIBED IN THE PROJECT SPECIFICATIONS ARE MINIMUM REQUIREMENTS FOR ANTICIPATED SITE CONDITIONS. DURING THE CONSTRUCTION PERIOD, UPGRADE THESE MEASURES AS NEEDED TO COMPLY WITH ALL APPLICABLE LOCAL, STATE, AND FEDERAL EROSION AND SEDIMENT CONTROL REGULATIONS.
5. IF TEMPORARY SHORING IS REQUIRED, CONTRACTOR SHALL DESIGN TEMPORARY SHORING PER APPLICABLE CODES AND STANDARDS, INCLUDING BUT NOT LIMITED TO WASHINGTON ADMINISTRATIVE CODE SAFETY STANDARDS FOR CONSTRUCTION WORK.
6. HIGH VISIBILITY FENCE SHALL BE PER WSDOT STANDARD PLAN I-10.10-01.
7. SILT FENCE SHALL BE PER WSDOT STANDARD PLAN I-30.10-02.
8. COMPOST SOCKS SHALL BE PER WSDOT STANDARD PLAN I-30.40-01.
9. PROVIDE EROSION CONTROL MEASURES FOR ALL DISTURBED AREAS INCLUDING STAGING, ACCESS, AND PARKING AREAS BEYOND THE LIMITS SHOWN ON THIS PLAN.
10. PLACE CATCH BASIN INSERT IN NEXT DOWNSTREAM INLET IN TOTEM LAKE WAY.
11. REFER TO SHEET L203 FOR A DESCRIPTION OF ALLOWABLE IMPACTS.
12. SLOPES STEEPER THAN 4:1 (HORIZONTAL:VERTICAL), INCLUDING SLOPES BELOW THE WATER STORAGE AREA IN THE BIORETENTION CELLS, SHALL BE STABILIZED PER SLOPE STABLIZATION DETAIL 1 ON SHEET CD101.

PARTNERSHIP berger
1927 Post Alley, Ste. 2
Seattle, WA 98101
206 325 6877
bergerpartnership.com

ch2m

Totem Lake Park Phase 1
City of Kirkland
12031 Totem Lake Way, Kirkland, WA 98034

SET TYPE:
BID SET

SET ISSUE DATE:
9/13/2019

REVISIONS:

DRAWN/CHECKED:
DRW / CHK

SHEET NAME:
CESC PLAN - BOARDWALK

SHEET NUMBER:
C203

Berger Partnership Project Number: XXXXXXXX.XX Instituto: 09.06.2019 2:58 PM By: Luehrs, Teresa/CCG filename: c:\pw_workdir\dms003\ch2mhill_l1uehrs\dms97542\c203_694933.dwg

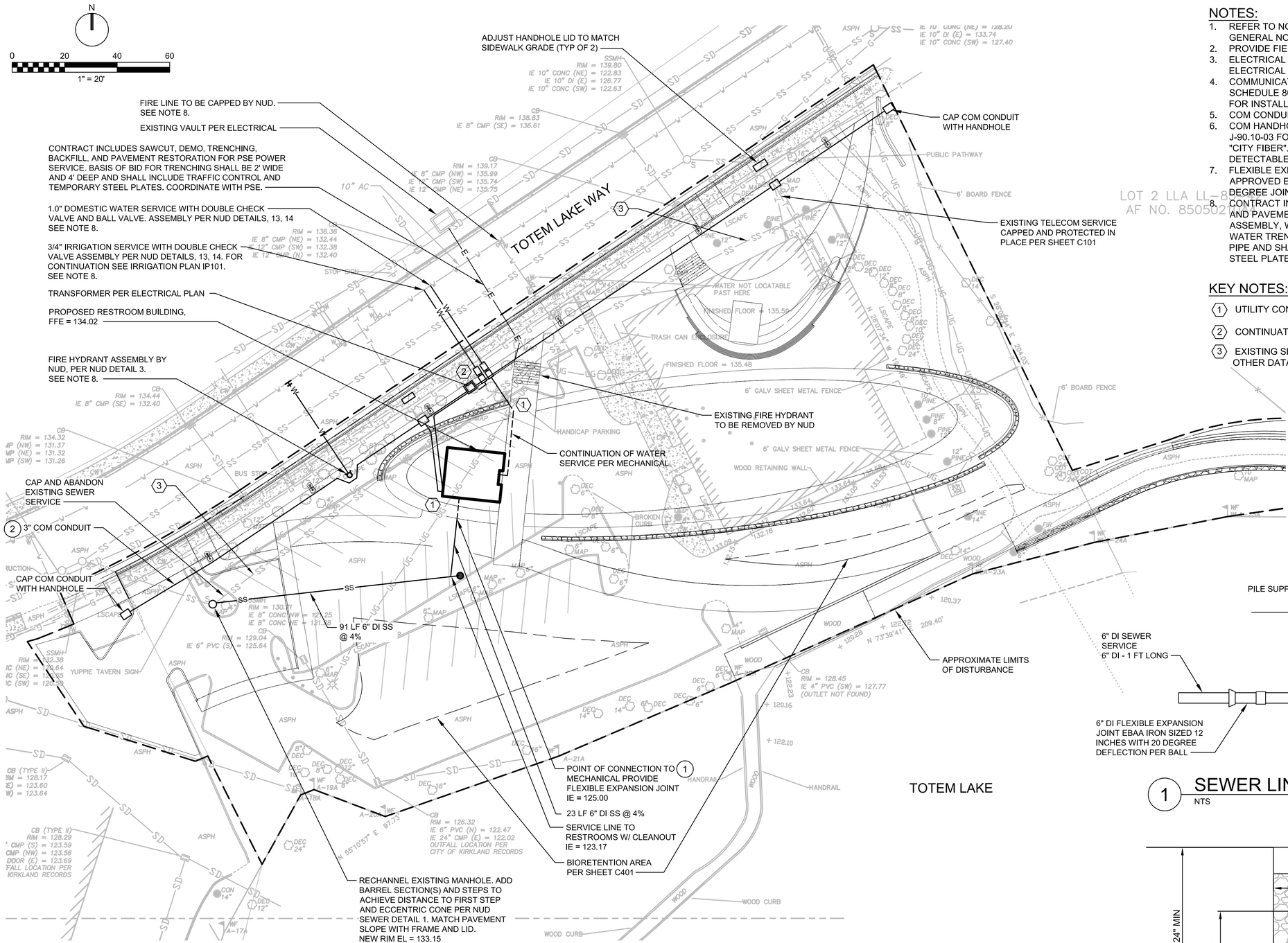

UTILITY PLAN

1" = 20'

NOTES:

1. REFER TO NORTHSHORE UTILITY DISTRICT WATER AND SEWER GENERAL NOTES ON C100.
2. PROVIDE FIELD LOK GASKETS FOR DUCTILE IRON SEWER PIPE.
3. ELECTRICAL SHOWN FOR REFERENCE ONLY. REFER TO ELECTRICAL PLANS FOR LOCATION AND DETAILS.
4. COMMUNICATIONS (COM) CONDUIT SHALL BE GRAY PVC SCHEDULE 80, 3" DIAMETER, WITH CONTINUOUS PULL STRING FOR INSTALLATION OF FUTURE FIBER OPTIC CABLE.
5. COM CONDUIT SHALL TERMINATE AT HANDHOLES.
6. COM HANDHOLE SHALL BE PER WSDOT STANDARD PLAN J-90.10-03 FOR PULL BOX, WITH STANDARD DUTY LID MARKED "CITY FIBER". OMIT WSDOT NAME AND LOGO. INSTALL DETECTABLE WARNING TAPE ABOVE CONDUIT.
7. FLEXIBLE EXPANSION JOINT SHALL BE EBAA FLEX-TEND OR APPROVED EQUAL WITH 12" EXPANSION JOINT WITH TWO 20 DEGREE JOINTS.
8. CONTRACT INCLUDES SAWCUT, DEMO, TRENCHING, BACKFILL, AND PAVEMENT RESTORATION FOR NUD FIRE HYDRANT ASSEMBLY, WATER SERVICES, AND CAPS. BASIS OF BID FOR WATER TRENCHING SHALL BE 3' WIDE AND 4.5' DEEP FOR EACH PIPE AND SHALL INCLUDE TRAFFIC CONTROL AND TEMPORARY STEEL PLATES. COORDINATE WITH NUD (TYP).

KEY NOTES:

1. UTILITY CONTINUATION BY MECHANICAL CONTRACTOR.
2. CONTINUATION BY LANDSCAPE CONTRACTOR
3. EXISTING SEWER SERVICE TO BUILDING FOUND FROM OTHER DATA SOURCES. CONTRACTOR TO VERIFY.

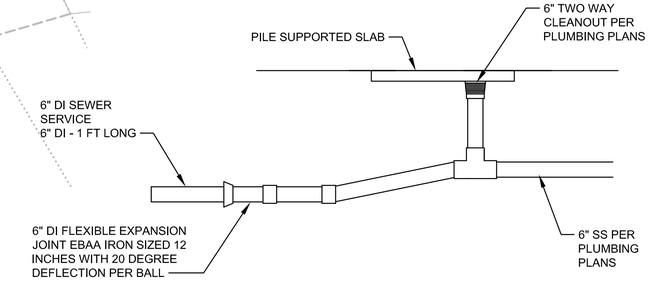

1 SEWER LINE CONNECTION DETAIL

NTS

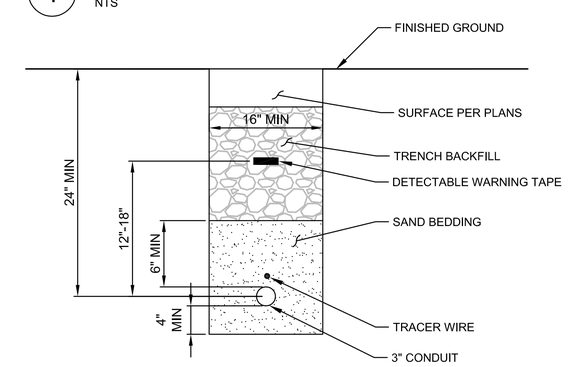

2 COM CONDUIT DETAIL

NTS

PARTNERSHIP berger
1927 Post Alley, Ste. 2
Seattle, WA 98101
206 325 6877
bergerpartnership.com
ch2m

Totem Lake Park Phase 1

City of Kirkland

12031 Totem Lake Way, Kirkland, WA 98034

WILLIAMS 45577 STATE OF WASHINGTON JESSE D. WILLIAMS REGISTERED PROFESSIONAL ENGINEER
11-20-2019

SET TYPE:
BID SET

SET ISSUE DATE:
9/13/2019

REVISIONS:

DRAWN/CHECKED:
TDL / JLW

SHEET NAME:
UTILITY PLAN - PARK

SHEET NUMBER:
C301

Berger Partnership Project Number: XXXXXXXX.XX Instant: 11.26.2019 8:51 AM by: Luehrs, Teresa/CCG Filename: c:\pw_workdir\den003\ch2mhill_lluehrs\dms97542\c301_694933.dwg

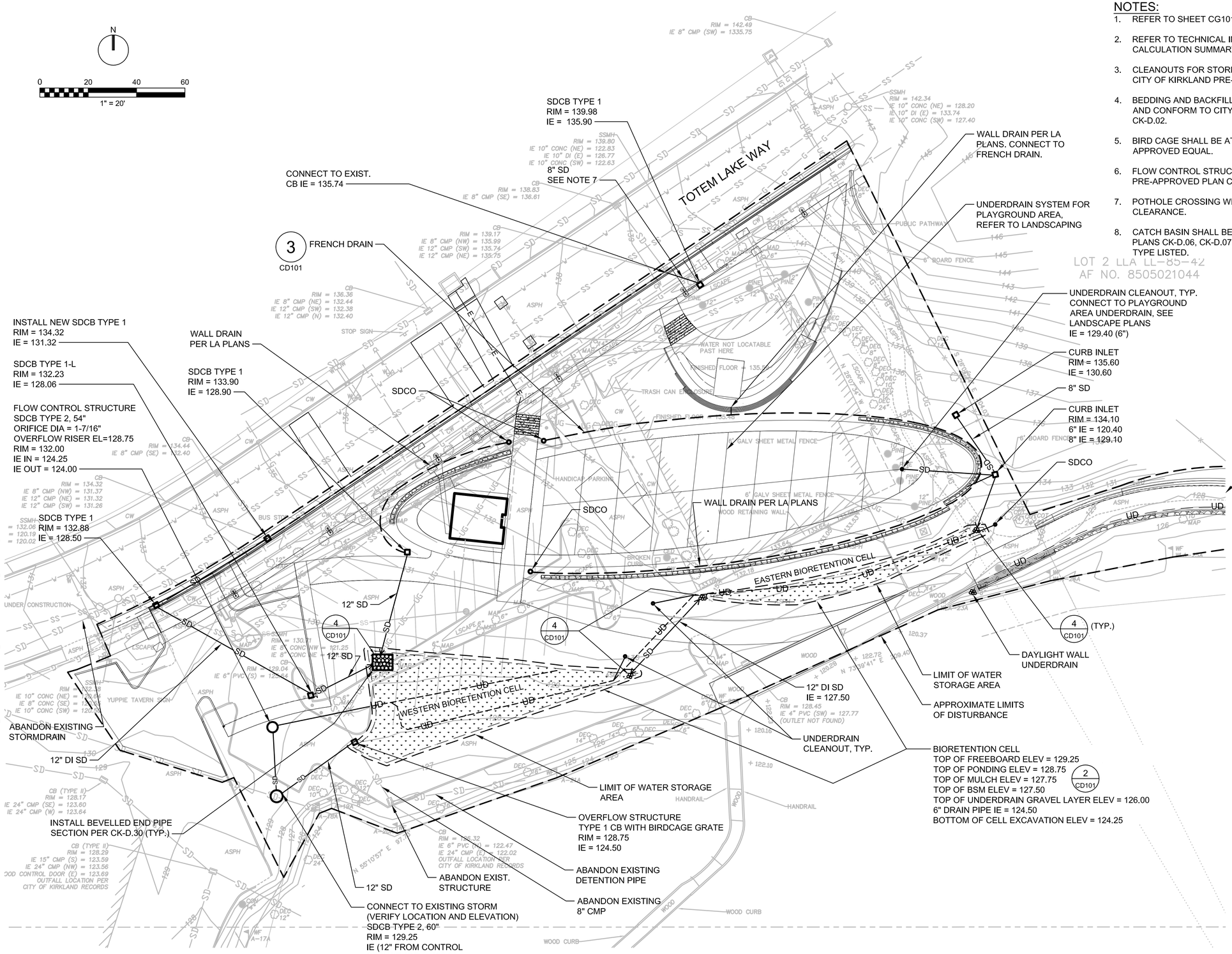

NOTES:

1. REFER TO SHEET CG101 FOR PAVING AND GRADING INFORMATION.
2. REFER TO TECHNICAL INFORMATION REPORT FOR DETENTION CALCULATION SUMMARY.
3. CLEANOUTS FOR STORM DRAIN AND UNDERDRAIN SHALL BE PER CITY OF KIRKLAND PRE-APPROVED PLAN CK-D.05B.
4. BEDDING AND BACKFILL FOR STORM DRAIN PIPE SHALL BE CSTC AND CONFORM TO CITY OF KIRKLAND PRE-APPROVED PLAN CK-D.02.
5. BIRD CAGE SHALL BE ATWOOD FABRICATING TYPE 1 BIRD CAGE OR APPROVED EQUAL.
6. FLOW CONTROL STRUCTURE SHALL BE PER CITY OF KIRKLAND PRE-APPROVED PLAN CK-D.10.
7. POTHOLE CROSSING WITH EXISTING UTILITIES, VERIFY CLEARANCE.
8. CATCH BASIN SHALL BE PER CITY OF KIRKLAND PRE-APPROVED PLANS CK-D.06, CK-D.07, CK-D.08, AND CK-D.09, DEPENDING ON TYPE LISTED.

DRAINAGE PLAN

1" = 20'

PARTNERSHIP berger
1927 Post Alley, Ste. 2
Seattle, WA 98101
206 325 6877
bergerpartnership.com

ch2m

Totem Lake Park Phase 1

City of Kirkland

12031 Totem Lake Way, Kirkland, WA 98034

WILLIAMS STATE OF WASHINGTON 45577 REGISTERED PROFESSIONAL ENGINEER

11-20-2019

SET TYPE:
BID SET

SET ISSUE DATE:
9/13/2019

REVISIONS:

DRAWN/CHECKED:
DRW / CHK

SHEET NAME:
DRAINAGE PLAN - PARK

SHEET NUMBER:
C401

Berger Partnership Project Number: XXXXXXXX.XX Printed: 11.26.2019 10:23 AM By: Luethrs, Teresa/CCG Filename: C:\pw_workdir\den003\cht2mhill_lluehs\dms97542\c401_694933.dwg

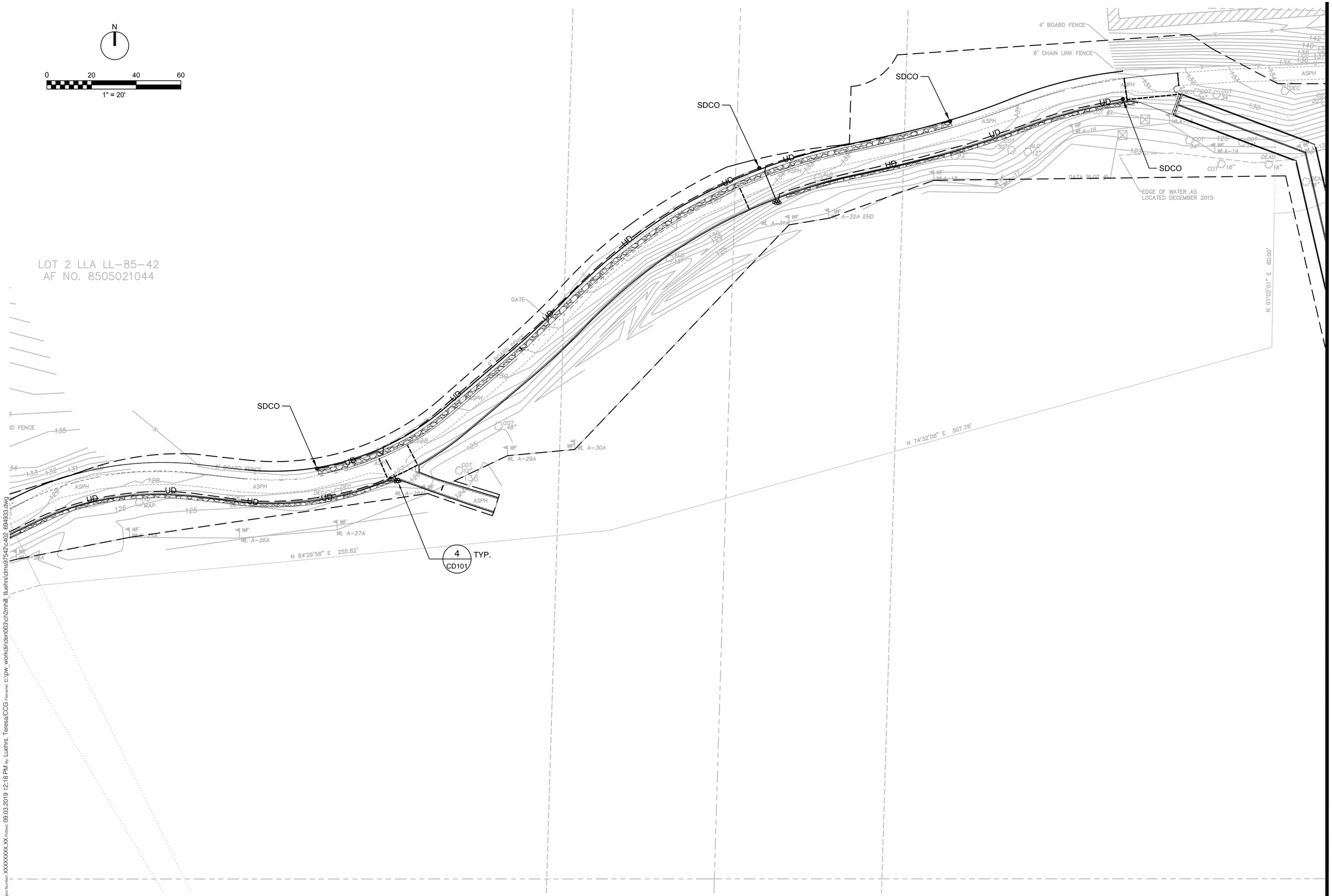

DRAINAGE PLAN - TRAIL

1" = 20'

berger PARTNERSHIP
1927 Post Alley, Ste. 2
Seattle, WA 98101
206 325 6877
bergerpartnership.com

ch2m

Totem Lake Park Phase 1

City of Kirkland

12031 Totem Lake Way, Kirkland, WA 98034

WILLIAMS WASHINGTON 45577 REGISTERED PROFESSIONAL ENGINEER STATE OF WASHINGTON

9/6/2019

SET TYPE:
BID SET

SET ISSUE DATE:
9/13/2019

REVISIONS:

DRAWN/CHECKED:
DRW / CHK

SHEET NAME:
DRAINAGE PLAN - TRAIL

SHEET NUMBER:
C402

Berger Partnership Project Number: XXXXXXXX.XX Plotted: 09.03.2019 12:18 PM By: Luehrs, Teresa/CCG Filename: c:\pw_workdir\den003\ch2mhill_tluehrs\dms97542\c402_694933.dwg

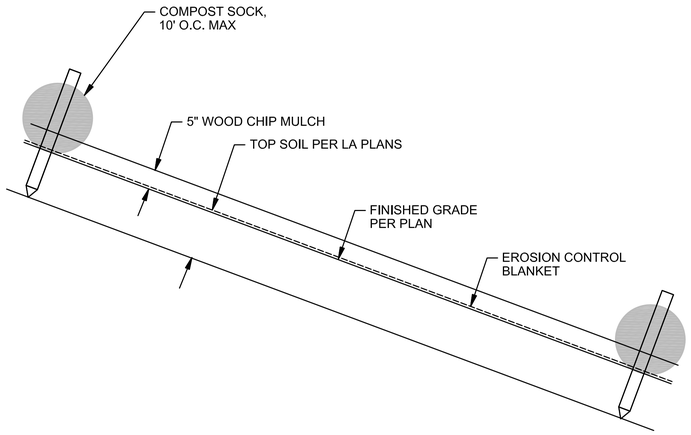

1 SLOPE STABILIZATION DETAIL
NTS

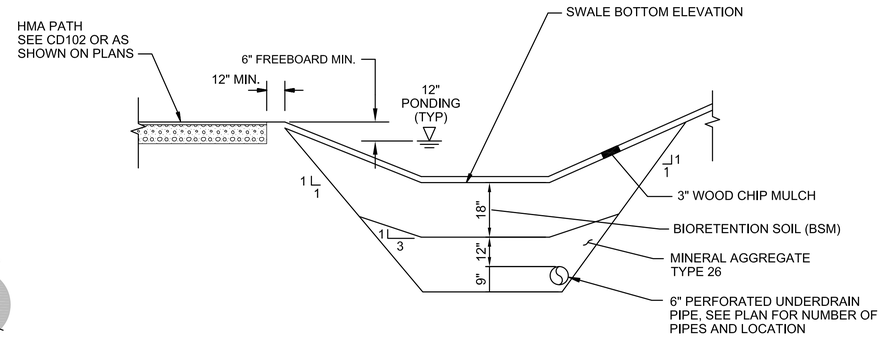

2 TYPICAL BIORETENTION CELL SECTION
NTS

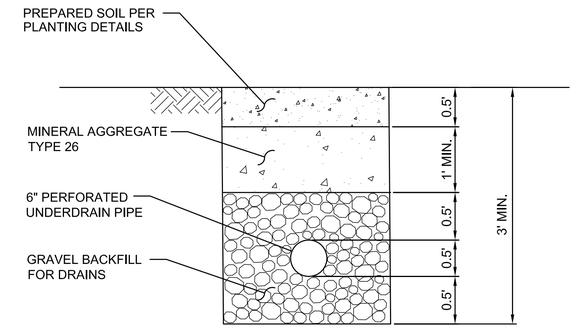

3 FRENCH DRAIN DETAIL
NTS

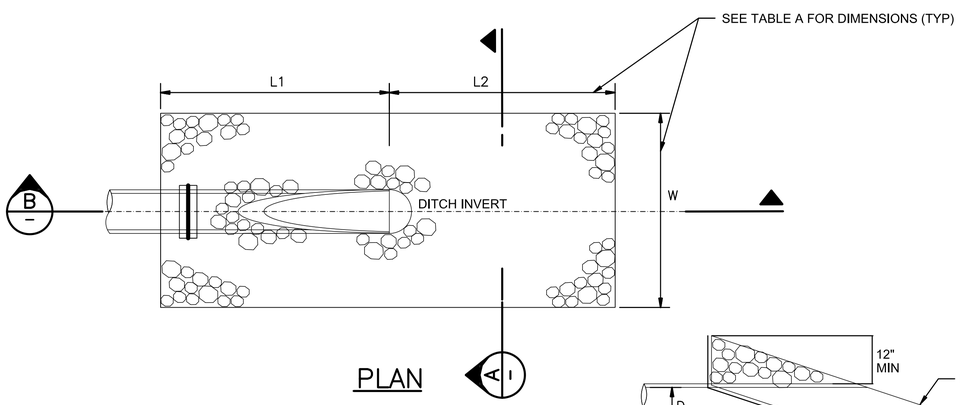

PLAN

TABLE A: DIMENSIONS
FOR ROCK PAD

PIPE DIAM	L2	W	L1	T
12"	5'	7'	6'	12"
12" UD	2'	2'	1'	8"
8"	5'	6'	5'	12"
6"	2'	2'	1'	8"

USE COBBLES FOR PIPE DISCHARGE INTO BIORETENTION
CELLS AND QUARRY SPALLS AT PIPE OUTFALL ALONG TRAIL

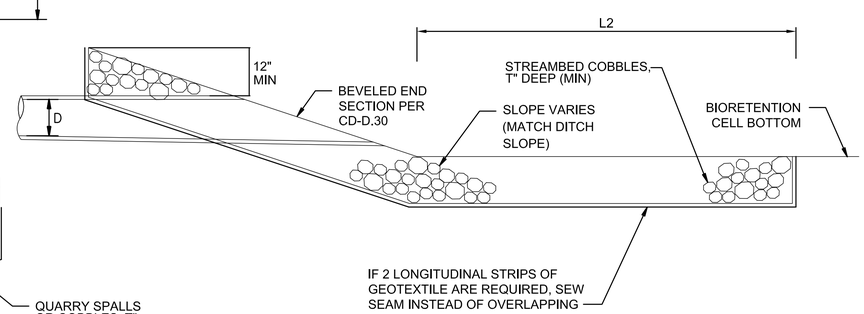

SECTION B
SCALE: NTS

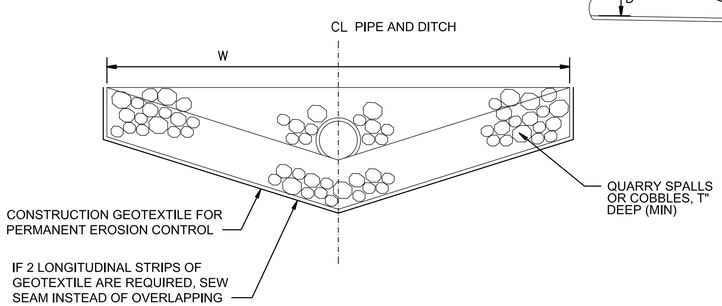

SECTION A
SCALE: NTS

4 ROCK PAD AT OUTFALL
NTS

PARTNERSHIP berger
1927 Post Alley, Ste. 2
Seattle, WA 98101
206 325 6877
bergerpartnership.com

ch2m

Totem Lake Park Phase 1
City of Kirkland
12031 Totem Lake Way, Kirkland, WA 98034

SET TYPE:
BID SET

SET ISSUE DATE:
9/13/2019

REVISIONS:

DRAWN/CHECKED:
DRW / CHK

SHEET NAME:
DRAINAGE DETAILS - PARK

SHEET NUMBER:
CD101

Berger Partnership Project Number: XXXXXXXX.XX Plotted: 09.03.2019 12:19 PM By: Luehrs, Teresa/CCG filename: c:\pw_workdir\den003\ch2mhill_tluehrs\dms97542\cd101_694933.dwg

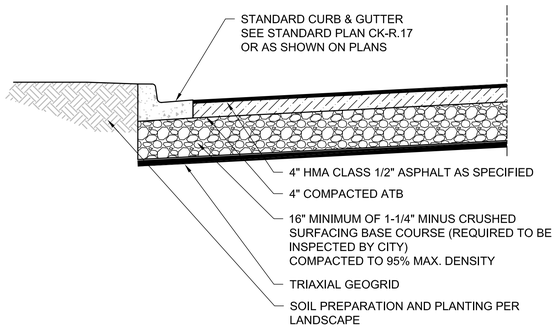

NOTES:
1. HOT MIX ASPHALT CLASS 1/2" OR CLASS B MAY BE USED IN LIEU OF ATB.

1 PARKING LOT PAVING SECTION
NTS

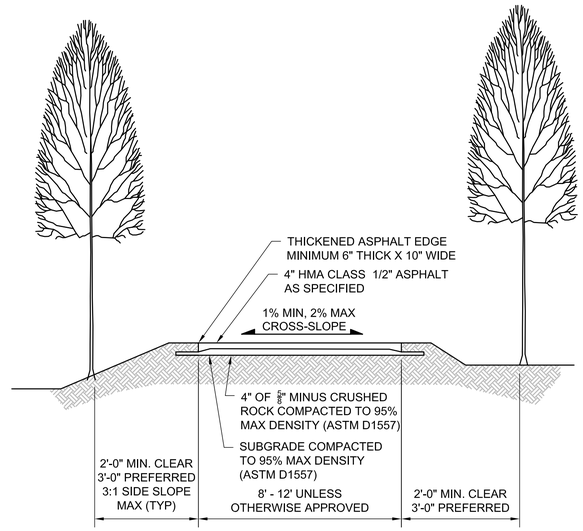

NOTES:
1. ALL PLANS MUST BE APPROVED BY THE CITY PRIOR TO CONSTRUCTION OF THE TRAIL. TRAIL CENTERLINE TO BE STAKED IN FIELD BY CONTRACTOR AND APPROVED BY THE APPROPRIATE CITY INSPECTOR.
2. SEE PATH EDGE DETAIL 4.

2 HMA TRAIL DETAIL
NTS

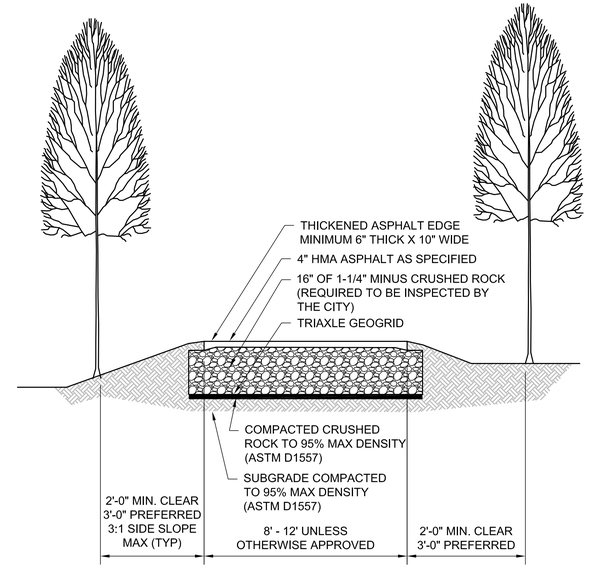

NOTES:
1. ALL PLANS MUST BE APPROVED BY THE CITY PRIOR TO CONSTRUCTION OF THE TRAIL. TRAIL CENTERLINE TO BE STAKED IN FIELD BY CONTRACTOR AND APPROVED BY THE APPROPRIATE CITY INSPECTOR.
2. SEE PATH EDGE DETAIL 4.

3 HMA PARK PATH DETAIL
NTS

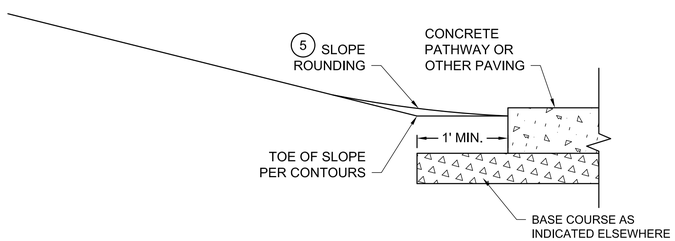

4 TRAIL EDGE DETAIL
NTS

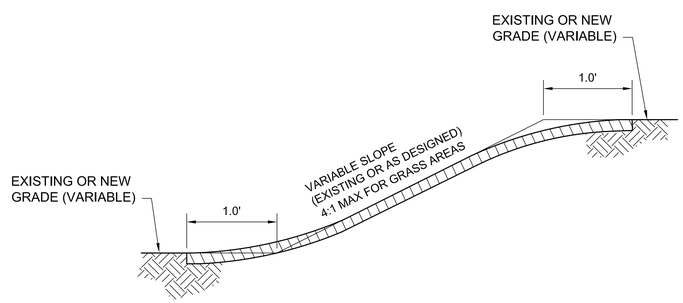

5 SLOPE ROUNDING DETAIL
NTS

PARTNERSHIP berger
1927 Post Alley, Ste. 2
Seattle, WA 98101
206 325 6877
bergerpartnership.com

ch2m

Totem Lake Park Phase 1
City of Kirkland
12031 Totem Lake Way, Kirkland, WA 98034

SET TYPE:
BID SET

SET ISSUE DATE:
9/13/2019

REVISIONS:

DRAWN/CHECKED:
DRW / CHK

SHEET NAME:
CIVIL PAVING DETAILS

SHEET NUMBER:
CD102

Berger Partnership Project Number: XXXXXXXX.XX Printed: 09.03.2019 12:20 PM By: Luehrs, Teresa/CCG Filename: c:\pw_workdir\den003\ch2mhill_tluehrs\dms97542\cd102_694933.dwg

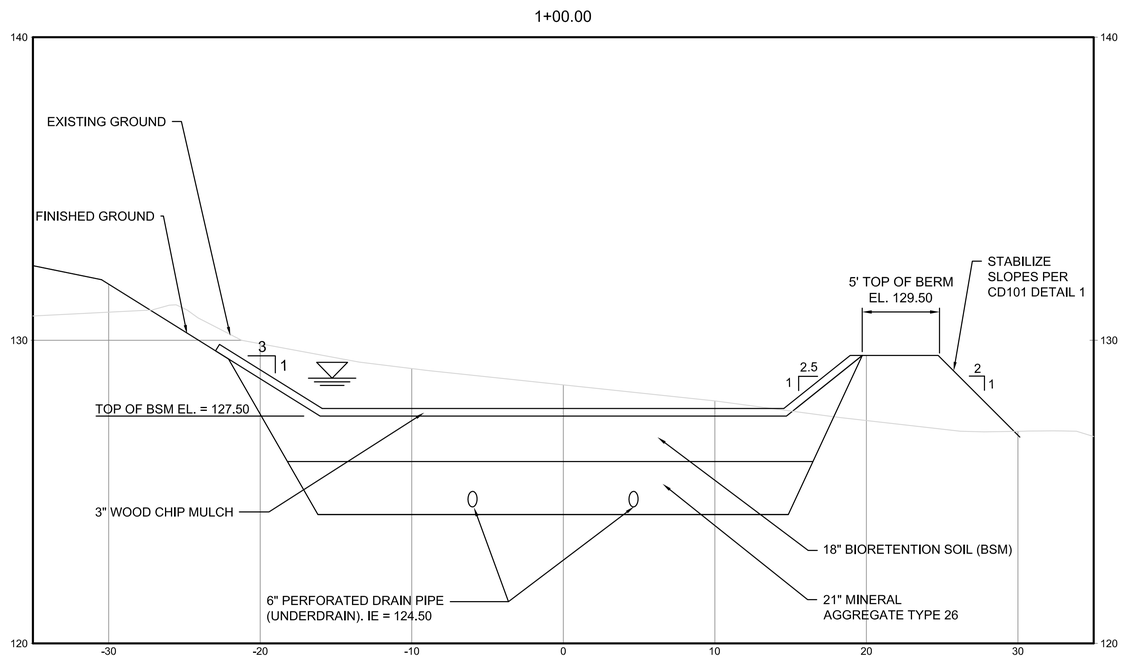

1 WESTERN BIORETENTION SECTION

SCALE: 1"=20'; 1"=10'V

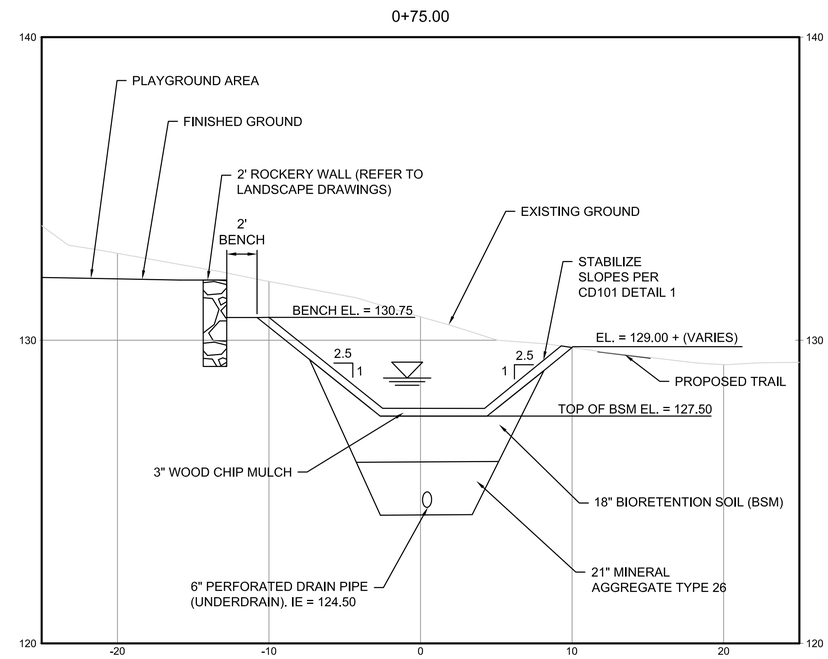

2 EASTERN BIORETENTION SECTION

SCALE: 1"=20'; 1"=10'V

PARTNERSHIP berger
1927 Post Alley, Ste. 2
Seattle, WA 98101
206 325 6877
bergerpartnership.com

ch2m

Totem Lake Park Phase 1

City of Kirkland

12031 Totem Lake Way, Kirkland, WA 98034

SET TYPE:
BID SET

SET ISSUE DATE:
9/13/2019

REVISIONS:

DRAWN/CHECKED:
DRW / CHK

SHEET NAME:
DRAINAGE SECTIONS - PARK

SHEET NUMBER:
CD103

Berger Partnership Project Number: XXXXXXXX.XX Plotted: 09.03.2019 12:23 PM By: Luehrs, Teresa/CCG Filename: c:\pw_workdir\den003\ch2mhill_lluehrs\dms97542\cd103_694933.dwg

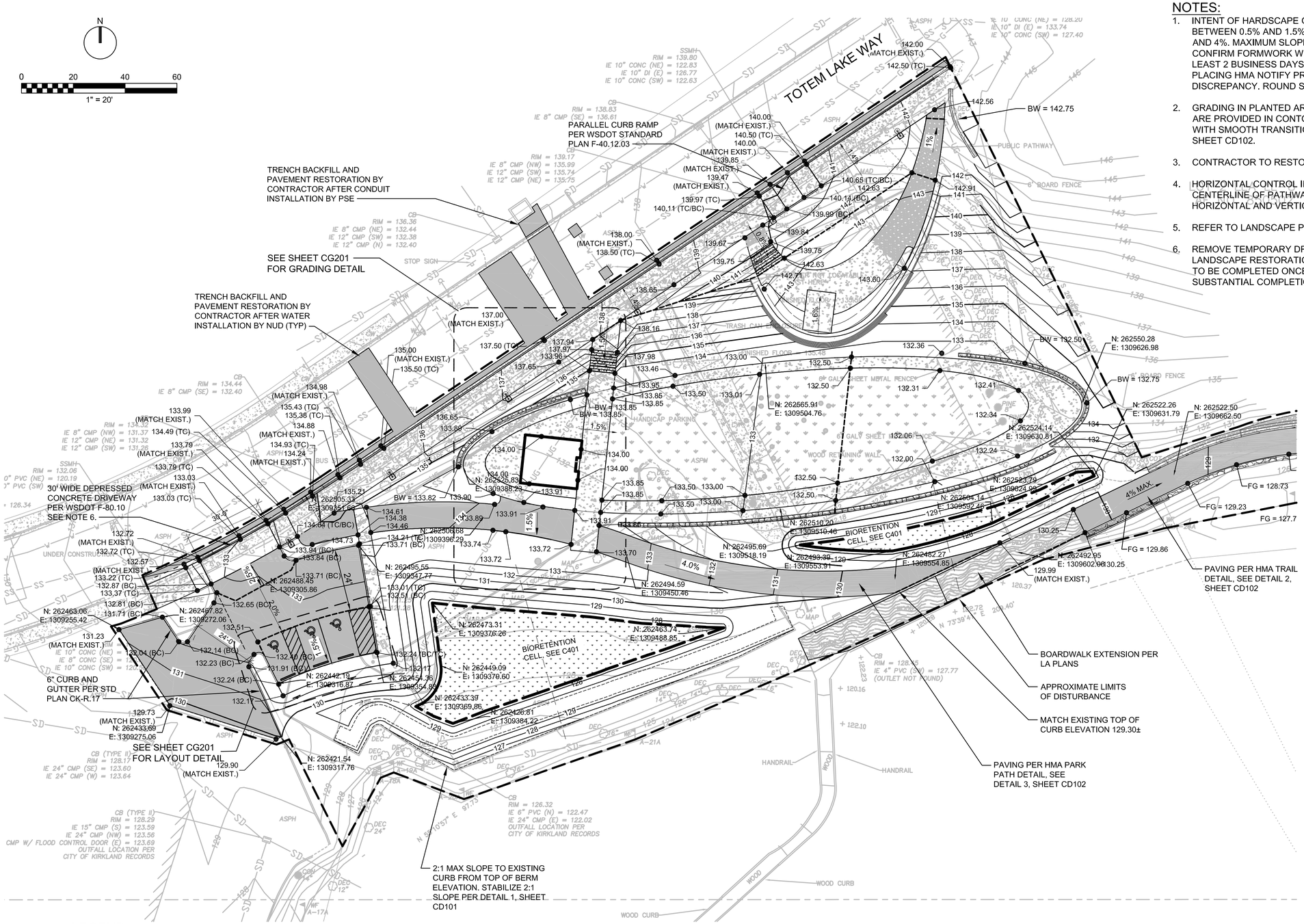

NOTES:

1. INTENT OF HARDSCAPE GRADING IS TO PRODUCE CROSS-SLOPE BETWEEN 0.5% AND 1.5% AND LONGITUDINAL SLOPE BETWEEN 0% AND 4%. MAXIMUM SLOPE IN ANY DIRECTION IN ADA STALLS IS 1.5%. CONFIRM FORMWORK WILL PRODUCE SLOPES IN THIS RANGE AT LEAST 2 BUSINESS DAYS BEFORE POURING CONCRETE; OR PLACING HMA NOTIFY PROJECT REPRESENTATIVE OF ANY DISCREPANCY. ROUND SLOPES PER DETAIL 5 ON SHEET CD102.
2. GRADING IN PLANTED AREAS SHALL BE SMOOTH. ANGLE POINTS ARE PROVIDED IN CONTOURS FOR EASE OF STAKING; CONSTRUCT WITH SMOOTH TRANSITIONS. ROUND SLOPES PER DETAIL 5 ON SHEET CD102.
3. CONTRACTOR TO RESTORE ALL AFFECTED PAVEMENT MARKINGS.
4. HORIZONTAL CONTROL INFORMATION PROVIDED FOR PATH IS TO CENTERLINE OF PATHWAY. REFER TO STRUCTURAL PLANS FOR HORIZONTAL AND VERTICAL LOCATIONS OF STRUCTURE.
5. REFER TO LANDSCAPE PLANS FOR TOP OF WALL ELEVATION.
6. REMOVE TEMPORARY DRIVEWAY PRIOR TO PAVEMENT AND LANDSCAPE RESTORATION PER PLAN. REMOVAL AND RESTORATION TO BE COMPLETED ONCE NEW DRIVEWAY IS INSTALLED AT SUBSTANTIAL COMPLETION.

LEGEND:

- GRADE BREAK
- 134.00 — SPOT ELEVATION
- FG 136.75 — FINISH GRADE
- 136 — CONTOUR
- HMA PAVING (SEE DETAILS ON CD-102)
- CONCRETE PAVING (REFER TO LANDSCAPE ARCHITECT)
- CRUSHED ROCK PAVING (REFER TO LANDSCAPE ARCHITECT)
- MATCH EXISTING
- BC = BOTTOM OF CURB ELEVATION
- TC = TOP OF CURB ELEVATION

GRADING & PAVING PLAN

1" = 20'

PARTNERSHIP berger
1927 Post Alley, Ste. 2
Seattle, WA 98101
206 325 6877
bergerpartnership.com

ch2m

Totem Lake Park Phase 1

City of Kirkland

12031 Totem Lake Way, Kirkland, WA 98034

WILLIAMS, JESSE R. — STATE OF WASHINGTON — 45577 — REGISTERED PROFESSIONAL ENGINEER
11-20-2019

SET TYPE:
BID SET

SET ISSUE DATE:
9/13/2019

REVISIONS:

DRAWN/CHECKED:
DRW / CHK

SHEET NAME:
GRADING & PAVING PLAN - PARK

SHEET NUMBER:
CG101

Berger Partnership Project Number: XXXXXXXX.XX Plotted: 11.25.2019 10:54 AM By: Luethrs, Teresa/CCG Filename: c:\pw_workdir\den003\ch2mhill_llu\ehs\dms97542\cg101_694933.dwg

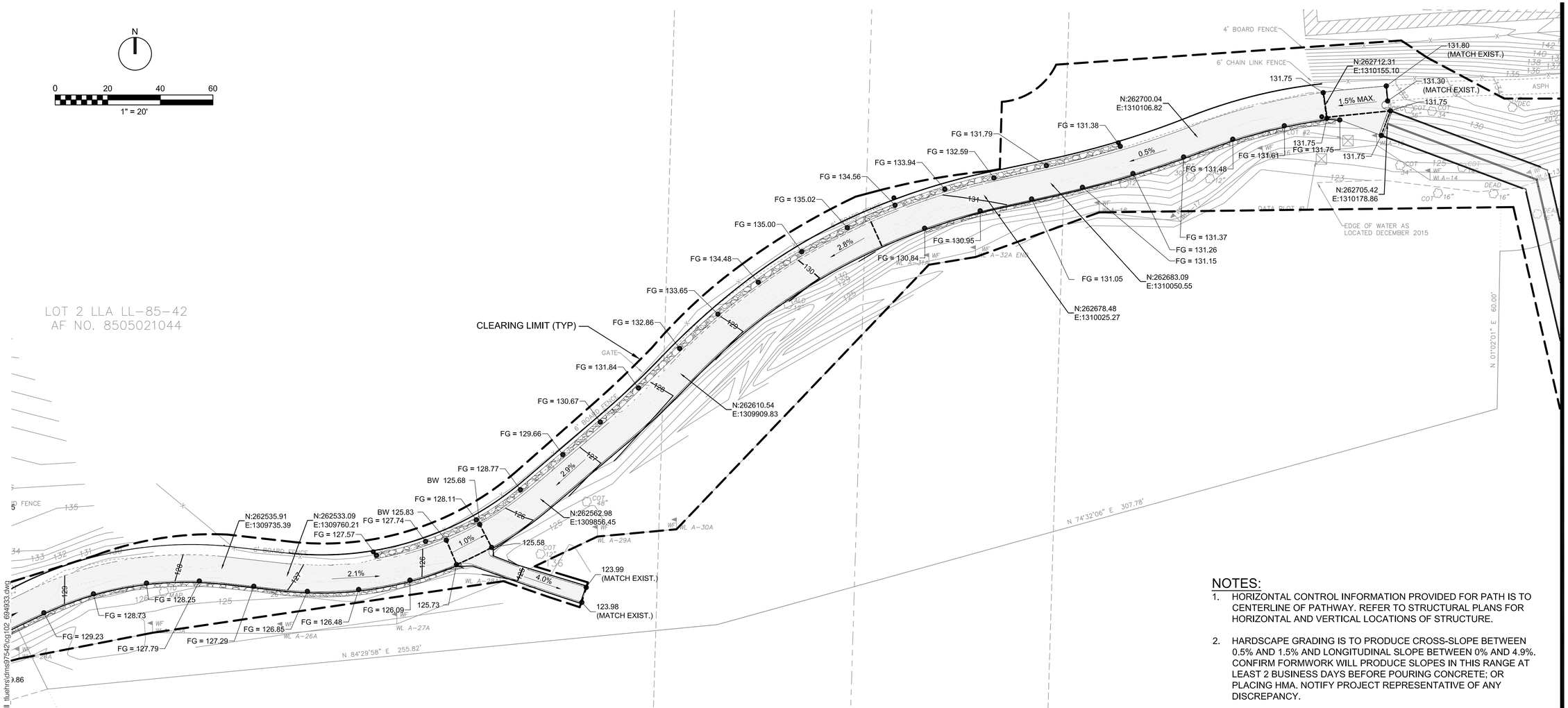

NOTES:

1. HORIZONTAL CONTROL INFORMATION PROVIDED FOR PATH IS TO CENTERLINE OF PATHWAY. REFER TO STRUCTURAL PLANS FOR HORIZONTAL AND VERTICAL LOCATIONS OF STRUCTURE.
2. HARDSCAPE GRADING IS TO PRODUCE CROSS-SLOPE BETWEEN 0.5% AND 1.5% AND LONGITUDINAL SLOPE BETWEEN 0% AND 4.9%. CONFIRM FORMWORK WILL PRODUCE SLOPES IN THIS RANGE AT LEAST 2 BUSINESS DAYS BEFORE POURING CONCRETE; OR PLACING HMA. NOTIFY PROJECT REPRESENTATIVE OF ANY DISCREPANCY.
3. GRADING IN PLANTED AREAS SHALL BE SMOOTH. ANGLE POINTS ARE PROVIDED IN CONTOURS FOR EASE OF STAKING; CONSTRUCT WITH SMOOTH TRANSITIONS.
4. REFER TO LA PLANS FOR TOP OF WALL ELEVATION.
5. BOTTOM OF WALL ELEVATION IS FINISHED GRADE AT FACE OF WALL AND DOES NOT INCLUDE ADDITIONAL WALL CONSTRUCTED BELOW FINISHED GRADE.

GRADING & PAVING PLAN - TRAIL

1" = 20'

PARTNERSHIP berger
1927 Post Alley, Ste. 2
Seattle, WA 98101
206 325 6877
bergerpartnership.com

ch2m

Totem Lake Park Phase 1

City of Kirkland

12031 Totem Lake Way, Kirkland, WA 98034

SET TYPE:
BID SET

SET ISSUE DATE:
9/13/2019

REVISIONS:

DRAWN/CHECKED:
DRW / CHK

SHEET NAME:
GRADING & PAVING PLAN - TRAIL

SHEET NUMBER:
CG102

Berger Partnership Project Number: XXXXXXXX.XX Plotted: 09.03.2019 12:25 PM By: Luehrs, Teresa/CCG Filename: C:\pw_workdir\den003\ch2mhill_lluehrs\dms975422\cg102_694933.dwg

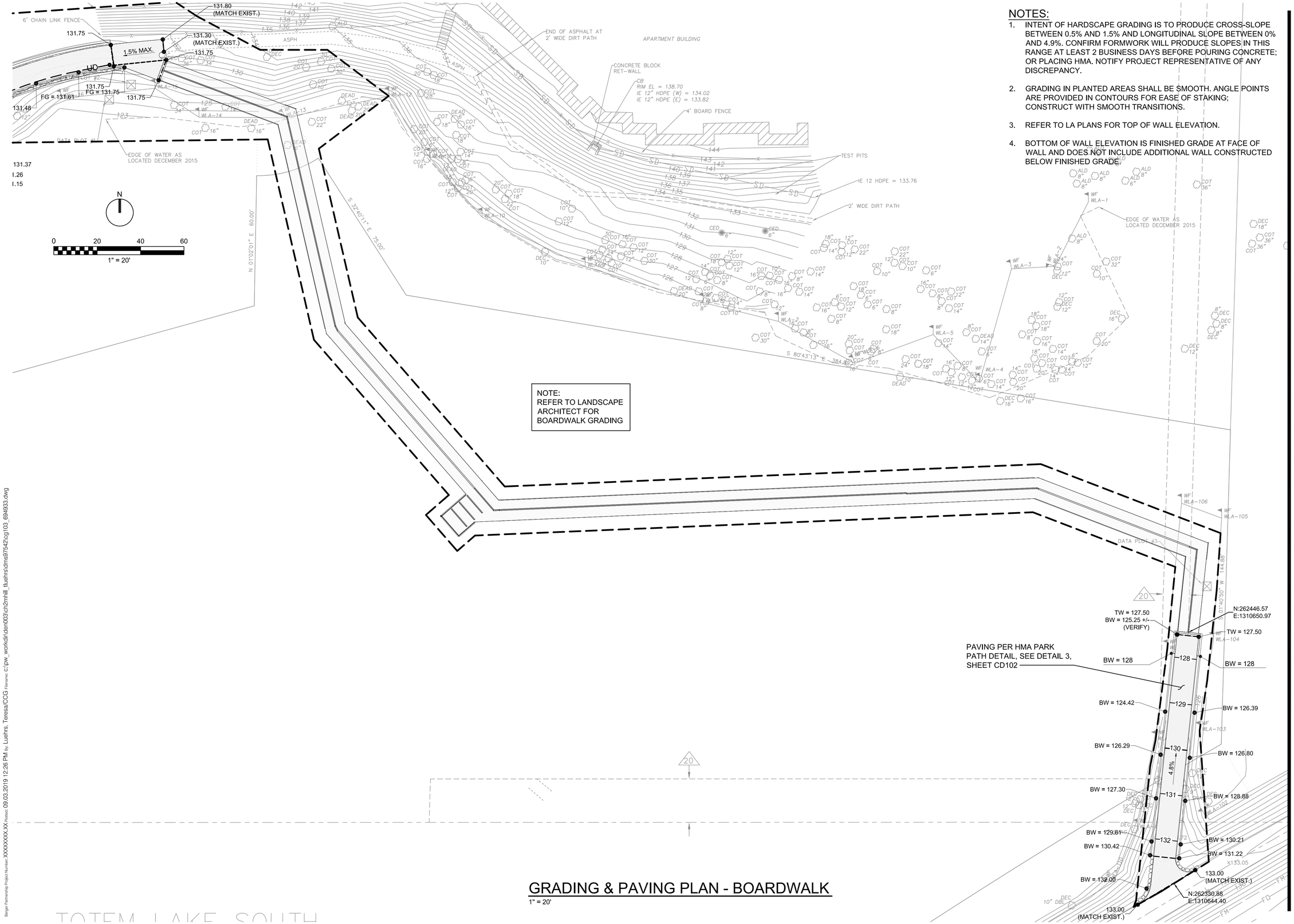

NOTES:

1. INTENT OF HARDSCAPE GRADING IS TO PRODUCE CROSS-SLOPE BETWEEN 0.5% AND 1.5% AND LONGITUDINAL SLOPE BETWEEN 0% AND 4.9%. CONFIRM FORMWORK WILL PRODUCE SLOPES IN THIS RANGE AT LEAST 2 BUSINESS DAYS BEFORE POURING CONCRETE; OR PLACING HMA. NOTIFY PROJECT REPRESENTATIVE OF ANY DISCREPANCY.
2. GRADING IN PLANTED AREAS SHALL BE SMOOTH. ANGLE POINTS ARE PROVIDED IN CONTOURS FOR EASE OF STAKING; CONSTRUCT WITH SMOOTH TRANSITIONS.
3. REFER TO LA PLANS FOR TOP OF WALL ELEVATION.
4. BOTTOM OF WALL ELEVATION IS FINISHED GRADE AT FACE OF WALL AND DOES NOT INCLUDE ADDITIONAL WALL CONSTRUCTED BELOW FINISHED GRADE.

GRADING & PAVING PLAN - BOARDWALK

1" = 20'

TOTEM LAKE SOUTH

PARTNERSHIP berger
1927 Post Alley, Ste. 2
Seattle, WA 98101
206 325 6877
bergerpartnership.com

ch2m

Totem Lake Park Phase 1

City of Kirkland

12031 Totem Lake Way, Kirkland, WA 98034

WILLIAMS, JOSEPH C. STATE OF WASHINGTON 45577 REGISTERED PROFESSIONAL ENGINEER
9/6/2019

SET TYPE:
BID SET

SET ISSUE DATE:
9/13/2019

REVISIONS:

DRAWN/CHECKED:
DRW / CHK

SHEET NAME:
GRADING & PAVING PLAN - BOARDWALK

SHEET NUMBER:
CG103

Berger Partnership Project Number: XXXXXXXX.XX Printed: 09.03.2019 12:26 PM By: Luehrs, Teresa/CCG Filename: c:\pw_workdir\den003\ch2mhill_tluehrs\dms97542\cg103_694933.dwg

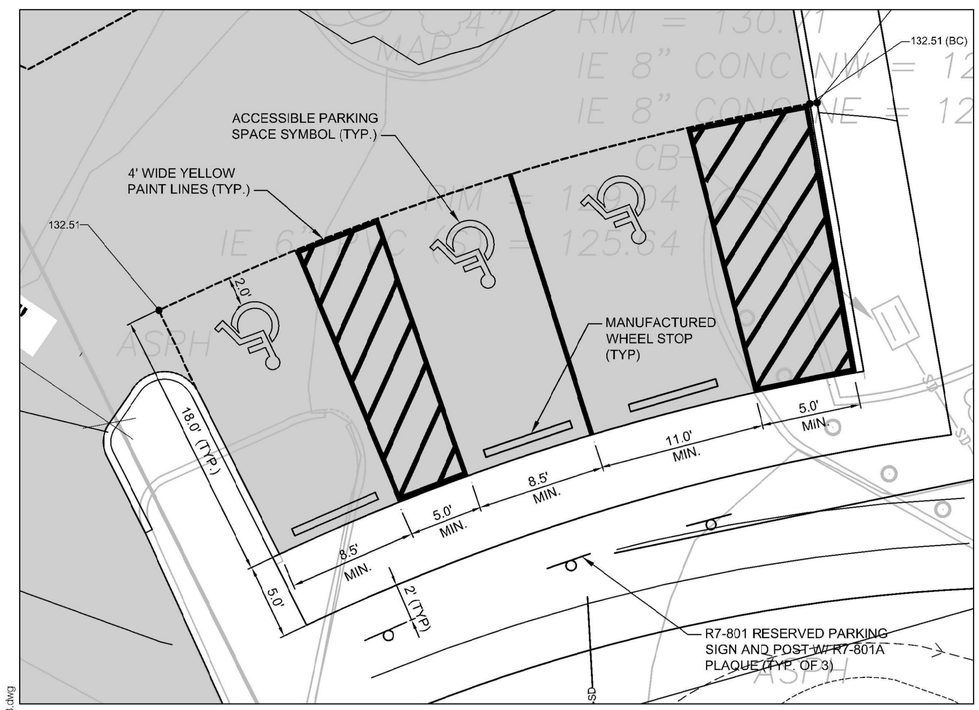

NOTES:

1. DIAGONAL STRIPING LAYOUT (ANGLE, SPACING, ETC.) PER WSDOT STANDARD PLAN M-17.10-02.
2. MANUFACTURED WHEEL STOPS SHALL BE PRECAST REINFORCED CONCRETE, 6" HIGH AND AT LEAST 6' LONG AND SECURED IN A MINIMUM OF 2 LOCATIONS WITH #4 REBAR WITH 12" MIN. EMBEDMENT.
3. TOP OF CURB ELEVATION IS 0.50' ABOVE BOTTOM OF CURB GRADE, UNLESS NOTED OTHERWISE.

PARKING LOT ENLARGED PLAN

1" = 5'

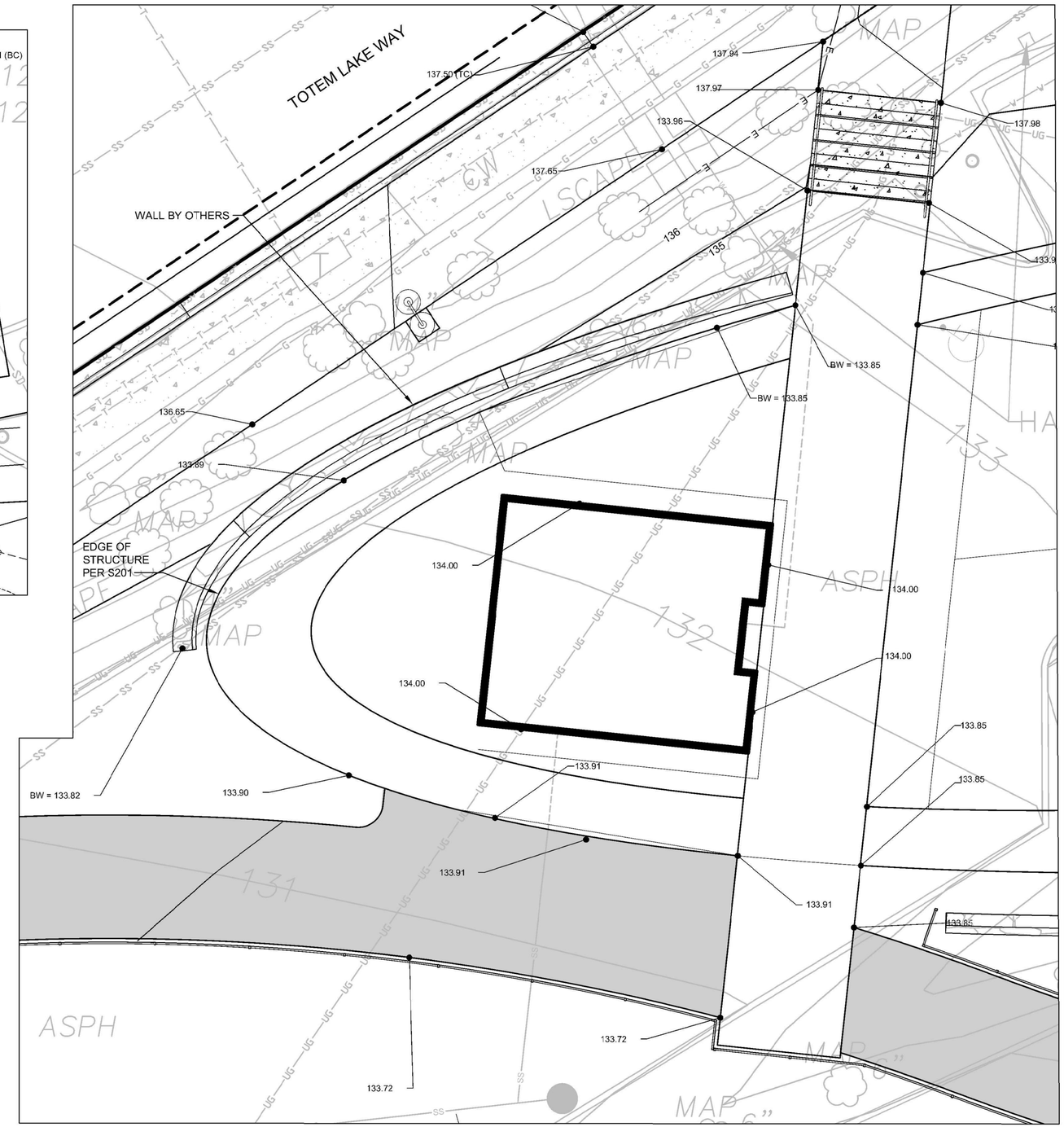

GRADING & PAVING ENLARGED PLAN

1" = 5'

PARTNERSHIP berger
1927 Post Alley, Ste. 2
Seattle, WA 98101
206 325 6877
bergerpartnership.com

ch2m

Totem Lake Park Phase 1

City of Kirkland

12031 Totem Lake Way, Kirkland, WA 98034

SET TYPE:
BID SET

SET ISSUE DATE:
9/13/2019

REVISIONS:

DRAWN/CHECKED:
DRW / CHK

SHEET NAME:
GRADING PLAN - PARK - ENLARGEMENT

SHEET NUMBER:
CG201

Berger Partnership Project Number: XXXXXXXX.XX Plotted: 11.25.2019 10:38 AM By: Luehrs, Teresa/CCG Filename: c:\pw_work\dms\den003\ch2mhill_tluehrs\dms97542\cg201_694933.dwg

LOT B
LLA LL-99-100
AF NO. 20000921

SITE LEGEND

- CONCRETE PAVING
- CONCRETE PAVING ON STRUCTURE
- CRUSHED ROCK PAVING
- SYNTHETIC TURF
- SYNTHETIC TURF ON STRUCTURE
- ASPHALT PAVING (REFER TO CIVIL)
- WOOD BOARDWALK DECKING @ EX. BOARDWALK
- PULTRUDED GRATING BOARDWALK
- STEEL BAR GRATING BOARDWALK
- PROJECT LIMITS
- EXTENT OF PILE SUPPORTED SLAB (REFER TO STRUCTURAL)
- PLAY EQUIPMENT POST TO STRUCTURAL PILE CONNECTION (REFER TO STRUCTURAL)
- CONCRETE PAVING THICKENED EDGE
- WOOD ROUND RAIL FENCE
- WOOD FENCE
- BIKE RACK
- LITTER RECEPTACLE
- VAYA BENCH
- VAYA CHAIR
- VAYA TABLE
- CHAIN LINK FENCE
- FILTREXX WALL
- ROCKERY WALL BACKFILL MATERIAL
- ROCKERY WALL
- WETLAND BOUNDARY

ALIGNMENT SCHEDULE	
Name	Alignment Description
BL	BOARDWALK LAYOUT CENTERLINE
PL	PARK PATHWAY CENTERLINE
SL	STREET CENTERLINE
TL	TRAIL EDGE LINE
T	TRAIL CENTERLINE

SITE GRADING NOTES:

1. REFER TO LANDSCAPE PLANS FOR ALL WALL ELEVATION INFORMATION, INCLUDING TW ELEVATIONS.

2. REFER TO CIVIL DRAWINGS FOR ALL PAVING ELEVATION INFORMATION.

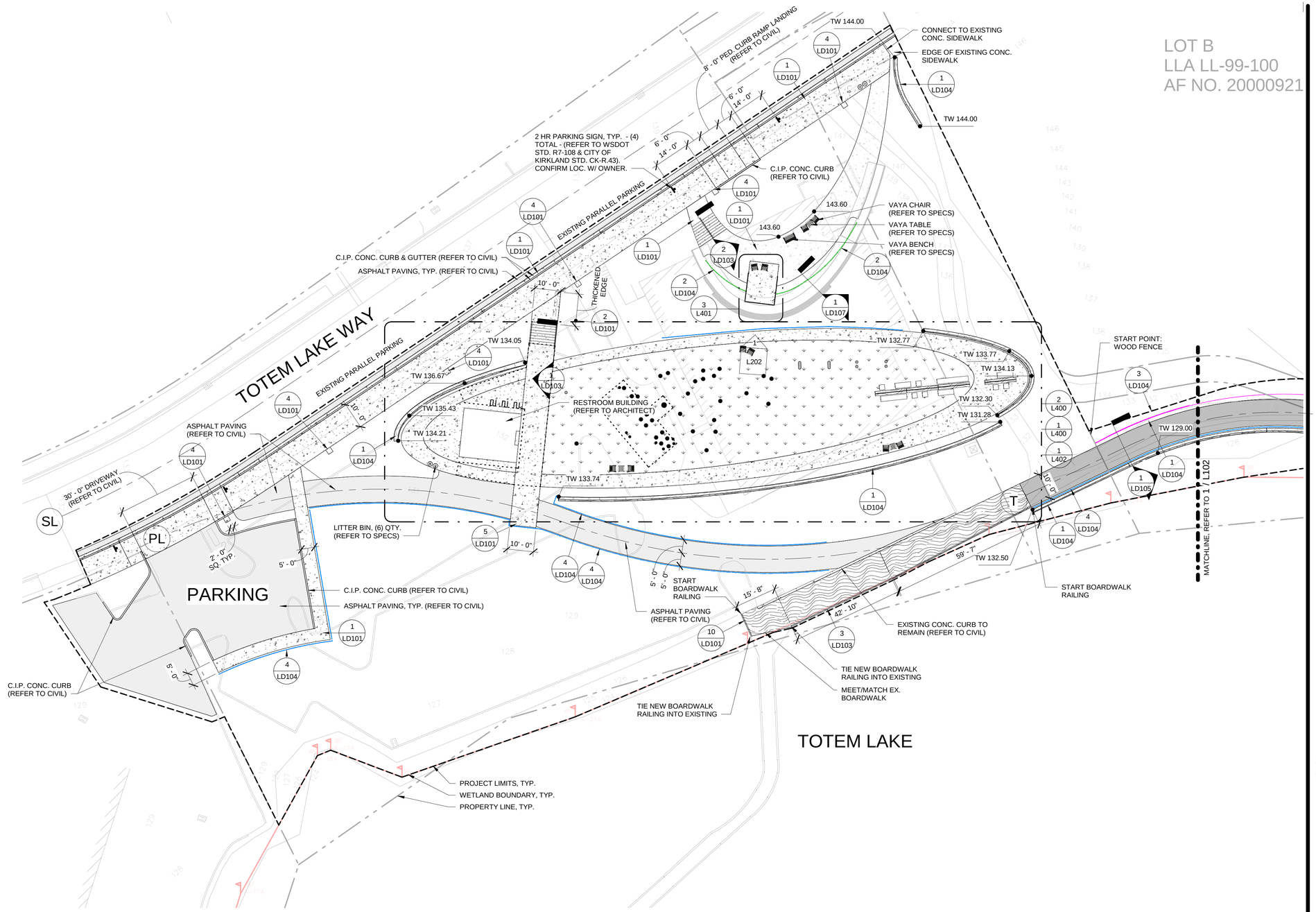

1 SITE PLAN - PARK
1" = 20'-0"

NORTH

0 20' 40'
SCALE: 1"=20'-0"

PARTNERSHIP berger
1927 Post Alley, Ste. 2
Seattle, WA 98101
206.325.6877
bergerpartnership.com

Totem Lake Park Phase 1
City of Kirkland
12031 Totem Lake Way, Kirkland, WA 98034

STATE OF WASHINGTON
ANDY MITTON
NO. 882 EXP. 6/30/2020
LANDSCAPE ARCHITECT

SET TYPE:
Bid Set

SET ISSUE DATE:
09/13/2019

REVISIONS:

Δ	DESCRIPTION	DATE
1	Permit Response	2019/06/20

DRAWN/CHECKED:
MM / AM

SHEET NAME:
SITE PLAN - PARK

SHEET NUMBER:
L101

Berger Partnership Project Number: 20154875.02
Plotted: 12/3/2019 11:52:59 AM
Filename: G:\Everyone\Christine Abbott\Revit Local\Totem Lake Park-PH1_christineaa@bergerpartnership.com.rvt

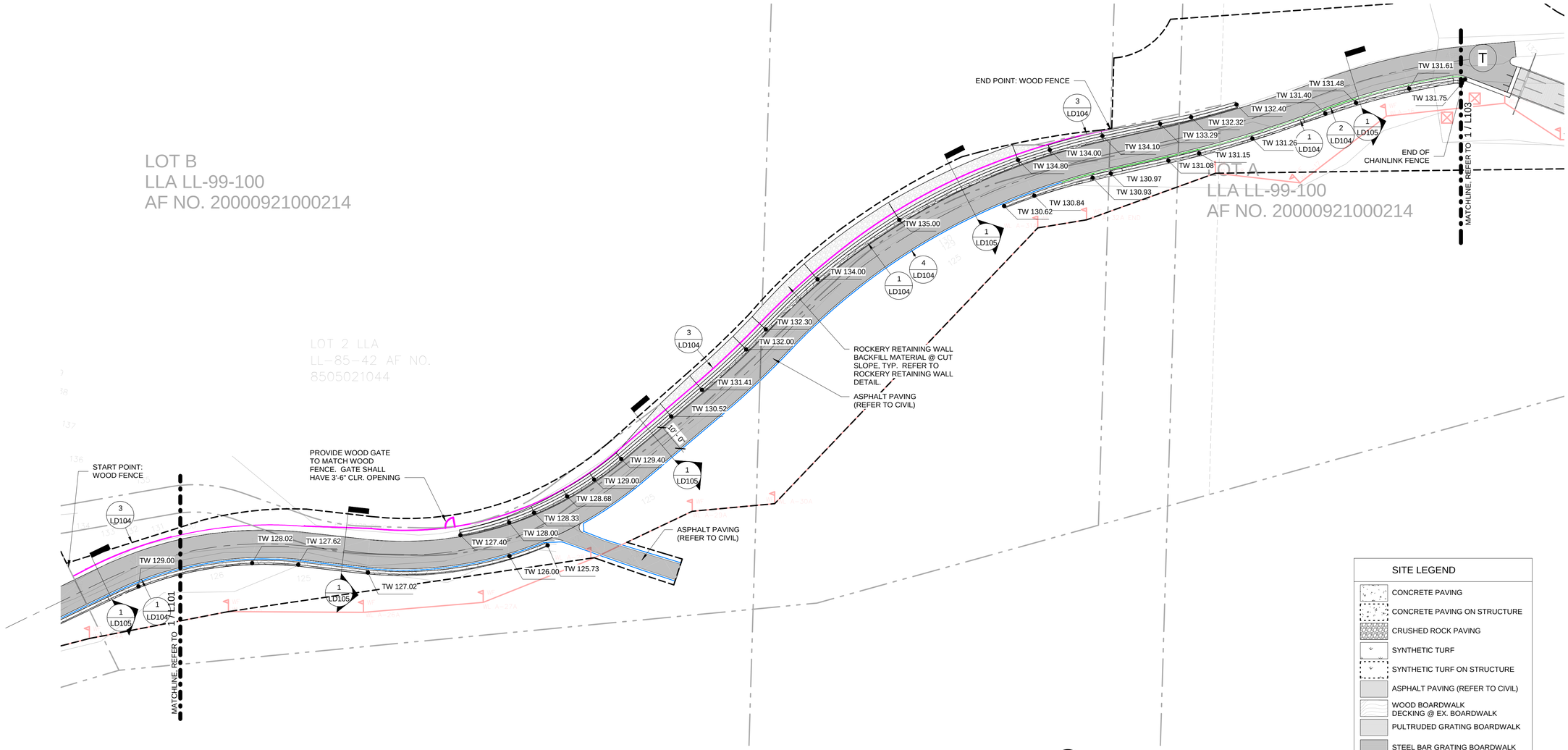

1 SITE PLAN - TRAIL
1" = 20'-0"

NORTH

0 20' 40'
SCALE: 1"=20'-0"

SITE GRADING NOTES:

1. REFER TO LANDSCAPE PLANS FOR ALL WALL ELEVATION INFORMATION, INCLUDING TW ELEVATIONS.

2. REFER TO CIVIL DRAWINGS FOR ALL PAVING ELEVATION INFORMATION.

ALIGNMENT SCHEDULE

Name	Alignment Description
BL	BOARDWALK LAYOUT CENTERLINE
PL	PARK PATHWAY CENTERLINE
SL	STREET CENTERLINE
TL	TRAIL EDGE LINE
T	TRAIL CENTERLINE

SITE LEGEND

- CONCRETE PAVING
- CONCRETE PAVING ON STRUCTURE
- CRUSHED ROCK PAVING
- SYNTHETIC TURF
- SYNTHETIC TURF ON STRUCTURE
- ASPHALT PAVING (REFER TO CIVIL)
- WOOD BOARDWALK DECKING @ EX. BOARDWALK
- PULTRUDED GRATING BOARDWALK
- STEEL BAR GRATING BOARDWALK
- PROJECT LIMITS
- EXTENT OF PILE SUPPORTED SLAB (REFER TO STRUCTURAL)
- PLAY EQUIPMENT POST TO STRUCTURAL PILE CONNECTION (REFER TO STRUCTURAL)
- CONCRETE PAVING THICKENED EDGE
- WOOD ROUND RAIL FENCE
- WOOD FENCE
- BIKE RACK
- LITTER RECEPTACLE
- VAYA BENCH
- VAYA CHAIR
- VAYA TABLE
- CHAIN LINK FENCE
- FILTREXX WALL
- ROCKERY WALL BACKFILL MATERIAL
- ROCKERY WALL
- WETLAND BOUNDARY

PARTNERSHIP berger
1927 Post Alley, Ste. 2
Seattle, WA 98101
206 325 6877
bergerpartnership.com

Totem Lake Park Phase 1
City of Kirkland
12031 Totem Lake Way, Kirkland, WA 98034

STATE OF WASHINGTON
ANDY MITTON
NO. 882 EXP. 6/30/2020
LANDSCAPE ARCHITECT

SET TYPE:
Bid Set

SET ISSUE DATE:
09/13/2019

REVISIONS:

Δ	DESCRIPTION	DATE

DRAWN/CHECKED:
MM / AM

SHEET NAME:
SITE PLAN - TRAIL

SHEET NUMBER:
L102

Berger Partnership Project Number: 20154875.02
Plotted: 12/3/2019 11:54:51 AM
Filename: G:\Everyone\Christine Abbott\Revit Local\Totem Lake Park-PH1_chrisinea@bergerpartnership.com.rvt

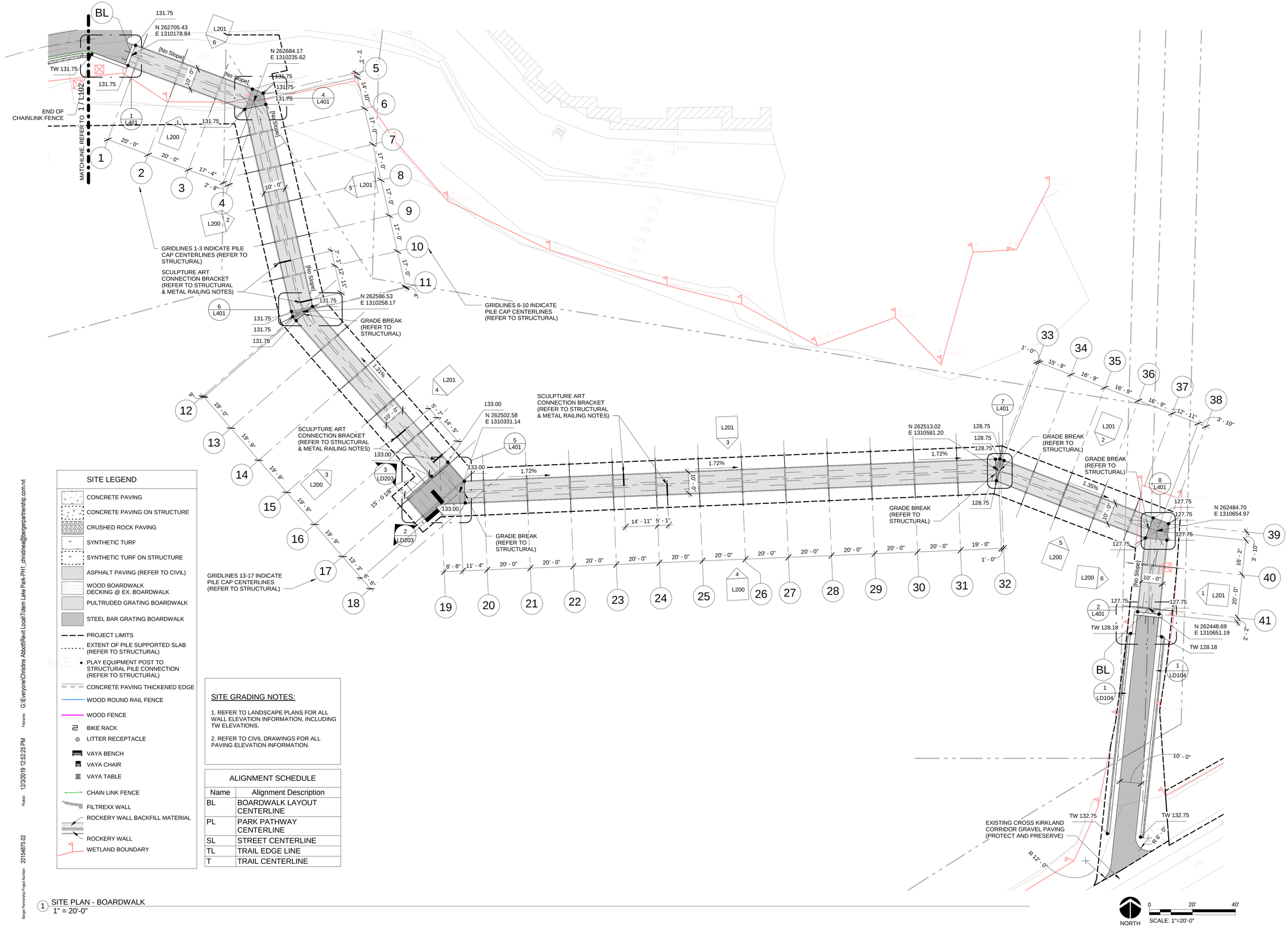

SITE LEGEND

- CONCRETE PAVING
- CONCRETE PAVING ON STRUCTURE
- CRUSHED ROCK PAVING
- SYNTHETIC TURF
- SYNTHETIC TURF ON STRUCTURE
- ASPHALT PAVING (REFER TO CIVIL)
- WOOD BOARDWALK DECKING @ EX. BOARDWALK
- PULTRUDED GRATING BOARDWALK
- STEEL BAR GRATING BOARDWALK
- PROJECT LIMITS
- EXTENT OF PILE SUPPORTED SLAB (REFER TO STRUCTURAL)
- PLAY EQUIPMENT POST TO STRUCTURAL PILE CONNECTION (REFER TO STRUCTURAL)
- CONCRETE PAVING THICKENED EDGE
- WOOD ROUND RAIL FENCE
- WOOD FENCE
- BIKE RACK
- LITTER RECEPTACLE
- VAYA BENCH
- VAYA CHAIR
- VAYA TABLE
- CHAIN LINK FENCE
- FILTREXX WALL
- ROCKERY WALL BACKFILL MATERIAL
- ROCKERY WALL
- WETLAND BOUNDARY

SITE GRADING NOTES:

1. REFER TO LANDSCAPE PLANS FOR ALL WALL ELEVATION INFORMATION, INCLUDING TW ELEVATIONS.

2. REFER TO CIVIL DRAWINGS FOR ALL PAVING ELEVATION INFORMATION.

ALIGNMENT SCHEDULE

Name	Alignment Description
BL	BOARDWALK LAYOUT CENTERLINE
PL	PARK PATHWAY CENTERLINE
SL	STREET CENTERLINE
TL	TRAIL EDGE LINE
T	TRAIL CENTERLINE

1 SITE PLAN - BOARDWALK
1" = 20'-0"

berger PARTNERSHIP
1927 Post Alley, Ste. 2
Seattle, WA 98101
206.325.6877
bergerpartnership.com

Totem Lake Park Phase 1
City of Kirkland
12031 Totem Lake Way, Kirkland, WA 98034

STATE OF WASHINGTON ANDY MITTON NO. 882 EXP. 6/30/2020 LANDSCAPE ARCHITECT

SET TYPE:
Bid Set

SET ISSUE DATE:
09/13/2019

REVISIONS:

Δ	DESCRIPTION	DATE

DRAWN/CHECKED:
MM / AM

SHEET NAME:
SITE PLAN - BOARDWALK

SHEET NUMBER:
L103

Berger Partnership Project Number: 20154875.02
Plotted: 12/3/2019 12:52:25 PM
Filename: G:\Everyone\Christine Abbott\Revit Local\Totem Lake Park-PH1_chrisinea@bergerpartnership.com.rvt

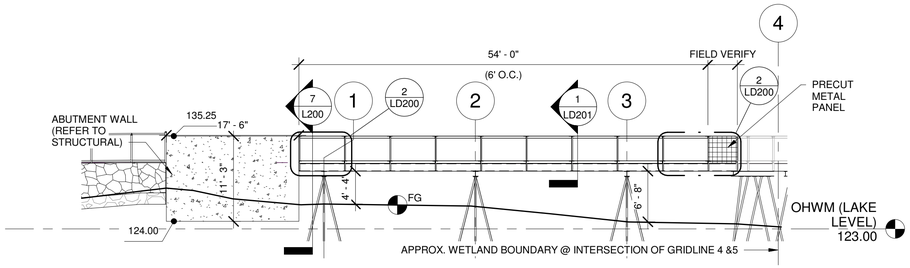

1 Elevation 1 - a
1" = 10'-0"

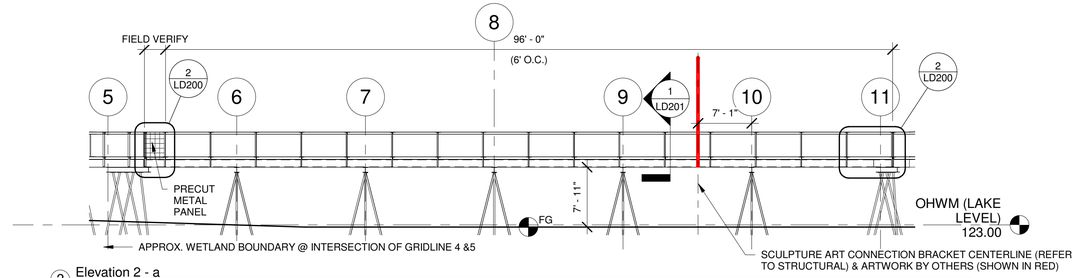

2 Elevation 2 - a
1" = 10'-0"

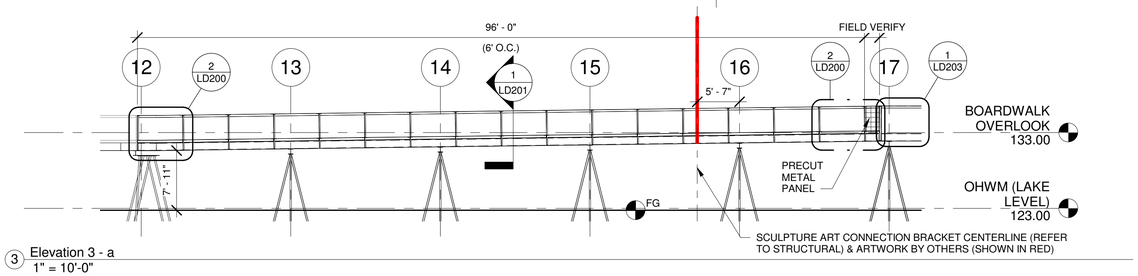

3 Elevation 3 - a
1" = 10'-0"

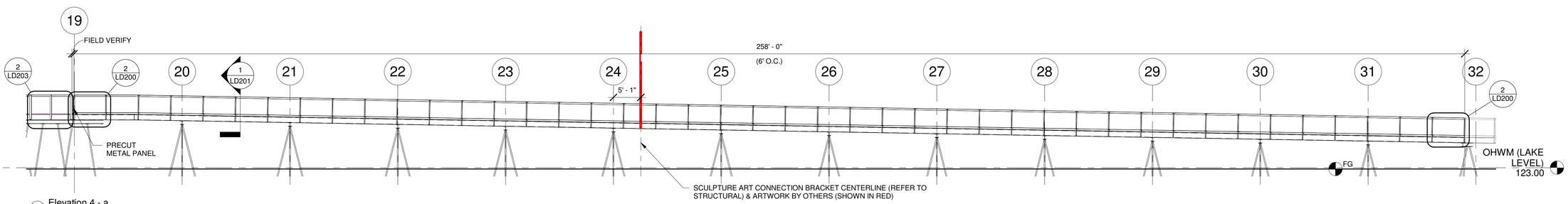

4 Elevation 4 - a
1" = 10'-0"

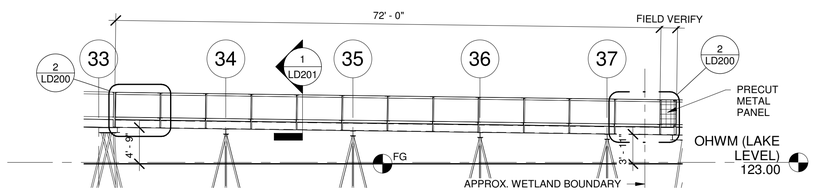

5 Elevation 5 - a
1" = 10'-0"

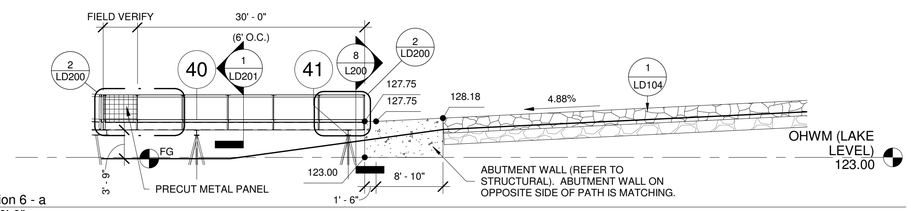

6 Elevation 6 - a
1" = 10'-0"

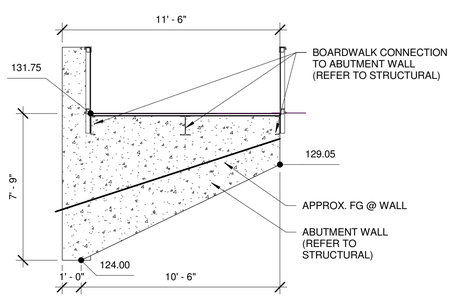

7 NORTH ABUTMENT WALL
1/4" = 1'-0"

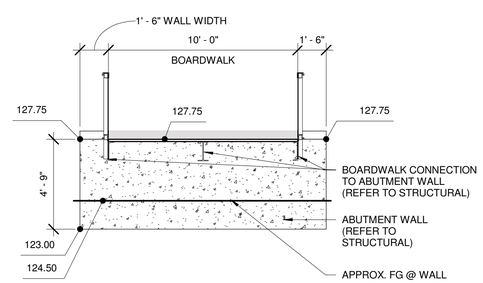

8 SOUTH ABUTMENT WALL
1/4" = 1'-0"

PARTNERSHIP berger
1927 Post Alley, Ste. 2
Seattle, WA 98101
206 325 6977
bergerpartnership.com

Totem Lake Park Phase 1
City of Kirkland
12031 Totem Lake Way, Kirkland, WA 98034

STATE OF WASHINGTON ANDY MITTON LANDSCAPE ARCHITECT NO 882 EXP. 6/30/2020

SET TYPE:
Bid Set

SET ISSUE DATE:
09/13/2019

REVISIONS:

Δ	DESCRIPTION	DATE

DRAWN/CHECKED:
MM / AM

SHEET NAME:
BOARDWALK ELEVATIONS

SHEET NUMBER:
L200

Berger Partnership Project Number: 20154875.02
Plotted: 9/12/2019 10:26:05 AM
Filename: G:\Everyone\Christine Abbott\Revit Local\Totem Lake Park-PH1_chrisinea@bergerpartnership.com.rvt

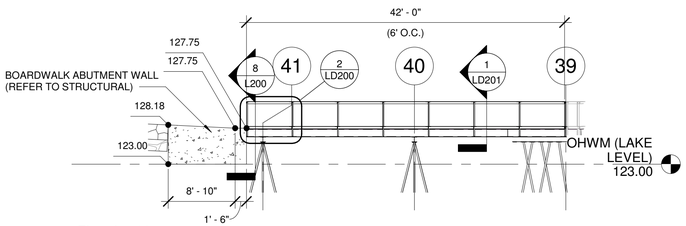

1 Elevation 12 - a
1" = 10'-0"

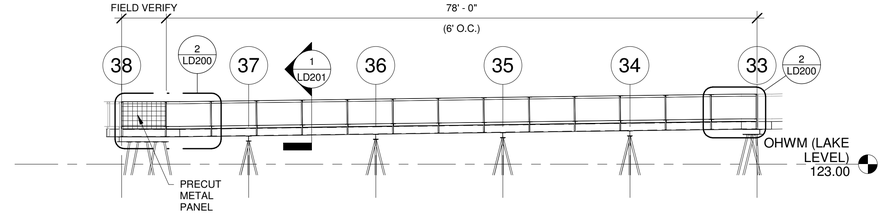

2 Elevation 11 - a
1" = 10'-0"

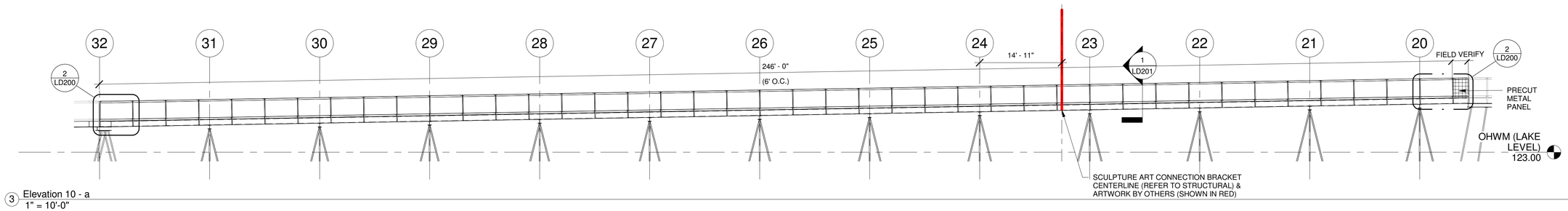

3 Elevation 10 - a
1" = 10'-0"

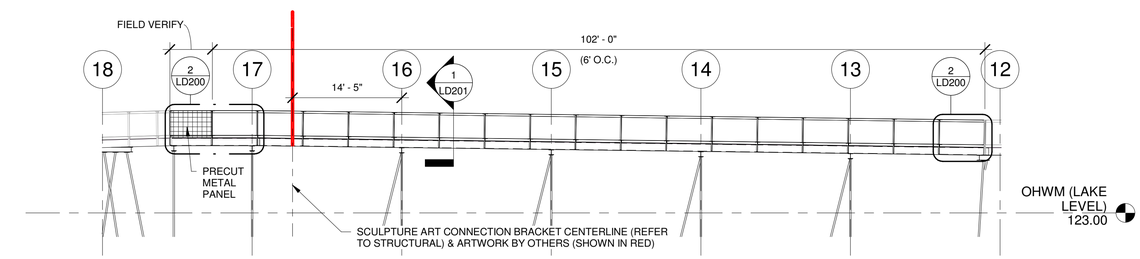

4 Elevation 9 - a
1" = 10'-0"

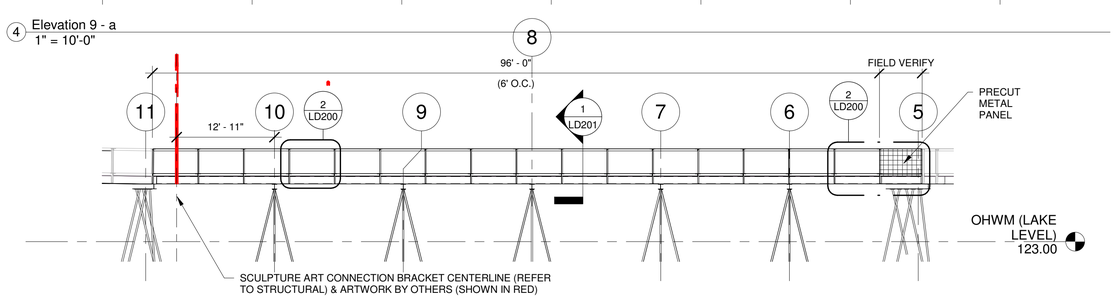

5 Elevation 8 - a
1" = 10'-0"

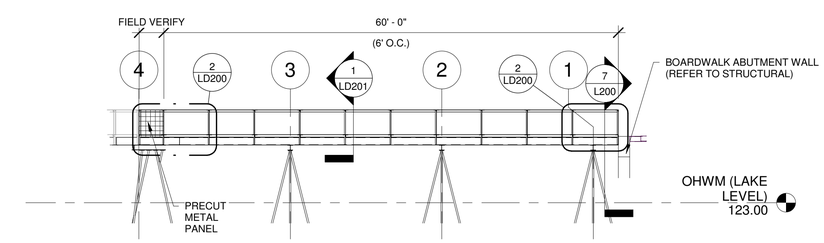

6 Elevation 7 - a
1" = 10'-0"

berger PARTNERSHIP
1927 Post Alley, Ste. 2
Seattle, WA 98101
206.325.6977
bergerpartnership.com

Totem Lake Park Phase 1

City of Kirkland

12031 Totem Lake Way, Kirkland, WA 98034

STATE OF WASHINGTON
ANDY MITTON
NO. 882 EXP. 6/30/2020
LANDSCAPE ARCHITECT

SET TYPE:
Bid Set

SET ISSUE DATE:
09/13/2019

REVISIONS:

Δ	DESCRIPTION	DATE

DRAWN/CHECKED:
MM / AM

SHEET NAME:
BOARDWALK ELEVATIONS

SHEET NUMBER:
L201

Berger Partnership Project Number: 20154875.02
Plotted: 9/12/2019 10:26:11 AM
Filename: G:\Everyone\Christine Abbott\Revit Local\Totem Lake Park-PH1_christinea@bergerpartnership.com.rvt

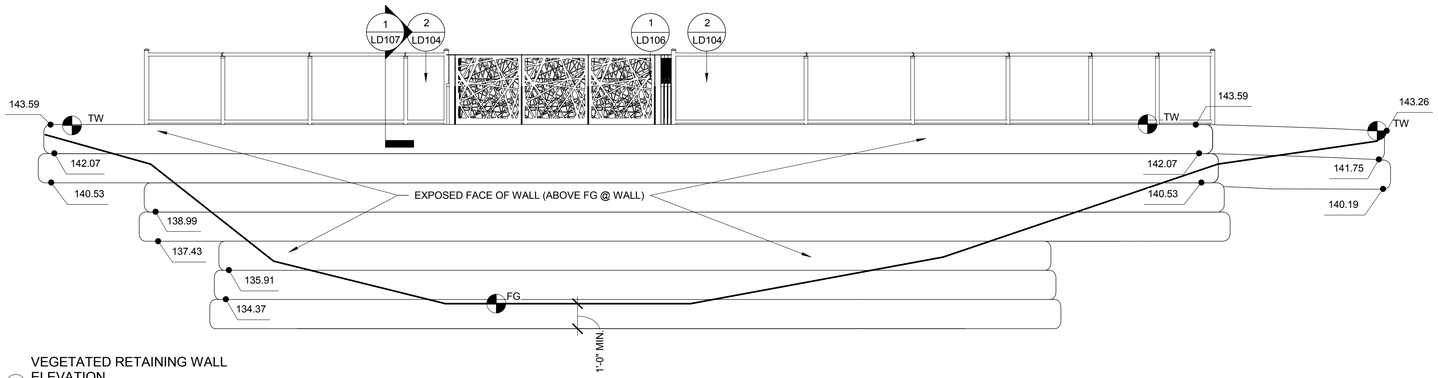

VEGETATED RETAINING WALL ELEVATION
1 1/4" = 1'-0"

NOTES:
1. APPROXIMATE FINISH GRADE @ FACE OF WALL SHOWN. REFER TO CIVIL FOR GRADING.
2. PLANT EXPOSED FACE OF WALL W/ SYMPHORICARPOS ALBUS & CORNUS SERICEA LIVESTAKES @ 2'-0" O.C. TRIANGULAR SPACING. DO NOT DAMAGE GEOGRID DURING PLANTING.
3. QUANTITIES OF LIVESTAKES SHALL BE EQ. PROPORTION OF EA. SPECIES.
4. LIVESTAKE LAYOUT SHALL BE RANDOMIZED, EXCEPT FOR ON THE UPER 18" OF THE WALL - NO CORNUS SERICEA SHALL BE USED ON THE UPPER 18". INSTALL SYMPHORICARPOS ALBUS LIVESTAKES ONLY ON TOP OF WALL.
5. SYMPHORICARPOS ALBUS LIVESTAKES SHALL BE 1/2" DIA. x 3' LENGTH AND SHALL BE EMBEDED 18" INTO THE WALL.
6. CORNUS SERICEA LIVESTAKES SHALL BE 3/4" DIA. x 4' LENGTH AND SHALL BE EMBEDED 24" INTO THE WALL.
7. LIVESTAKES SHALL BE HARVESTED AND PLANTED WITHIN TWO WEEKS OF HARVEST/CUTTING AND SHALL BE STORED IN SHADED, COOL, MOIST CONDITIONS BEFORE PLANTING.
8. LIVESTAKES SHALL BE INSTALLED BETWEEN OCTOBER 15TH AND MARCH 15TH.
9. HYDROSEED EXPOSED FACE OF WALL W/ NATIVE SEED MIX (REFER TO SPECS).

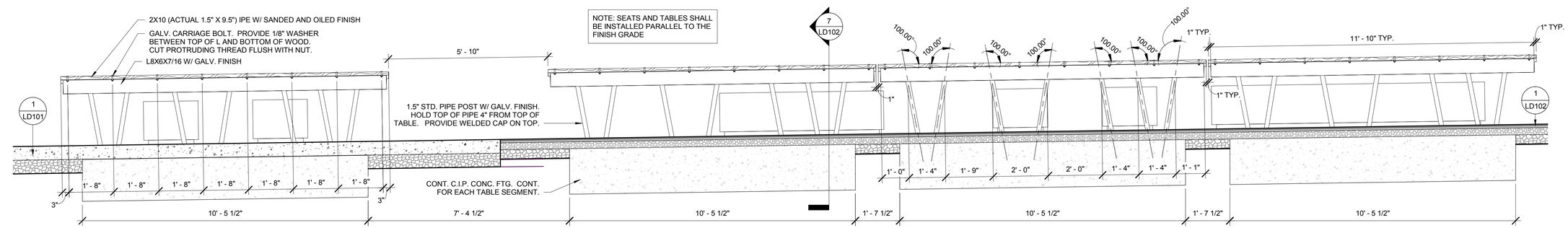

PICNIC ELEVATION
2 1/2" = 1'-0"

berger PARTNERSHIP
1927 Post Alley, Ste. 2
Seattle, WA 98101
206.325.6877
bergerpartnership.com

Totem Lake Park Phase 1
City of Kirkland
12031 Totem Lake Way, Kirkland, WA 98034

STATE OF WASHINGTON
ANDY MITTON
NO. 882 EXP. 6/30/2020
LANDSCAPE ARCHITECT

SET TYPE:
Bid Set

SET ISSUE DATE:
09/13/2019

REVISIONS:

Δ	DESCRIPTION	DATE

DRAWN/CHECKED:
MM / AM

SHEET NAME:
PARK ELEVATIONS

SHEET NUMBER:
L202

Berger Partnership Project Number: 20154875.02
Plotted: 11/26/2019 11:12:34 AM
Filename: C:\Users\mattm\Documents\Totem Lake Park-PH1_mattm@bergerpartnership.com.rvt

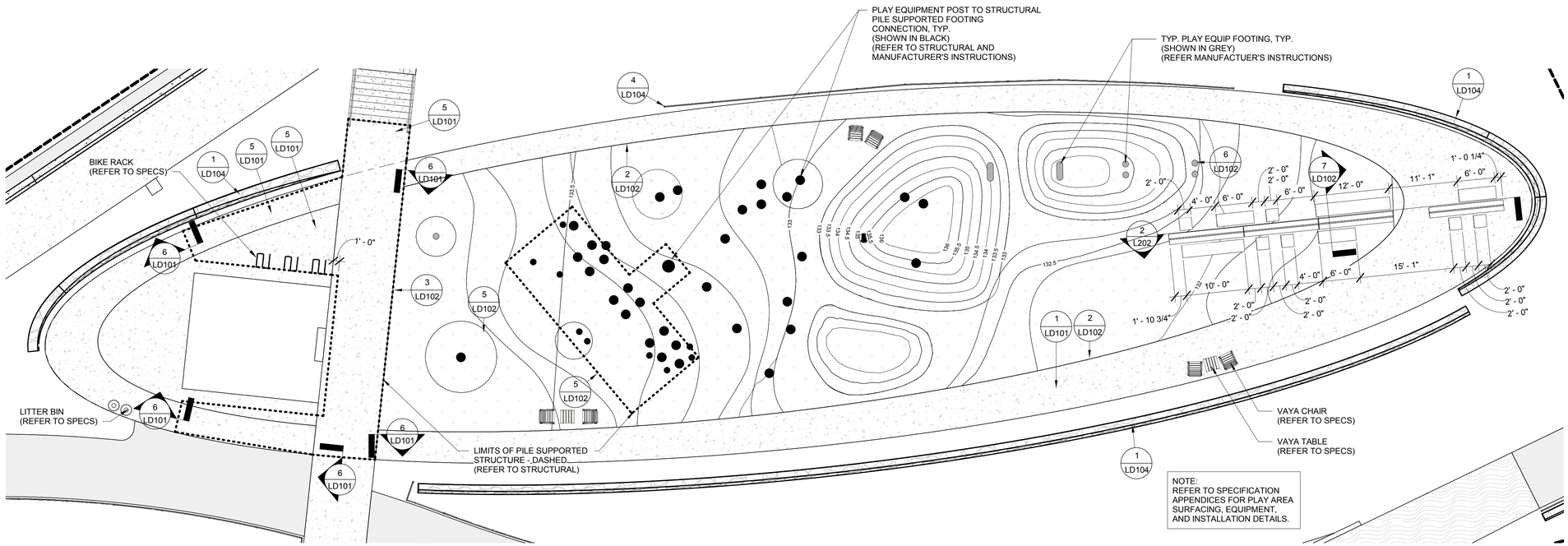

1 PLAY AREA ENLARGEMENT
1" = 10'-0"

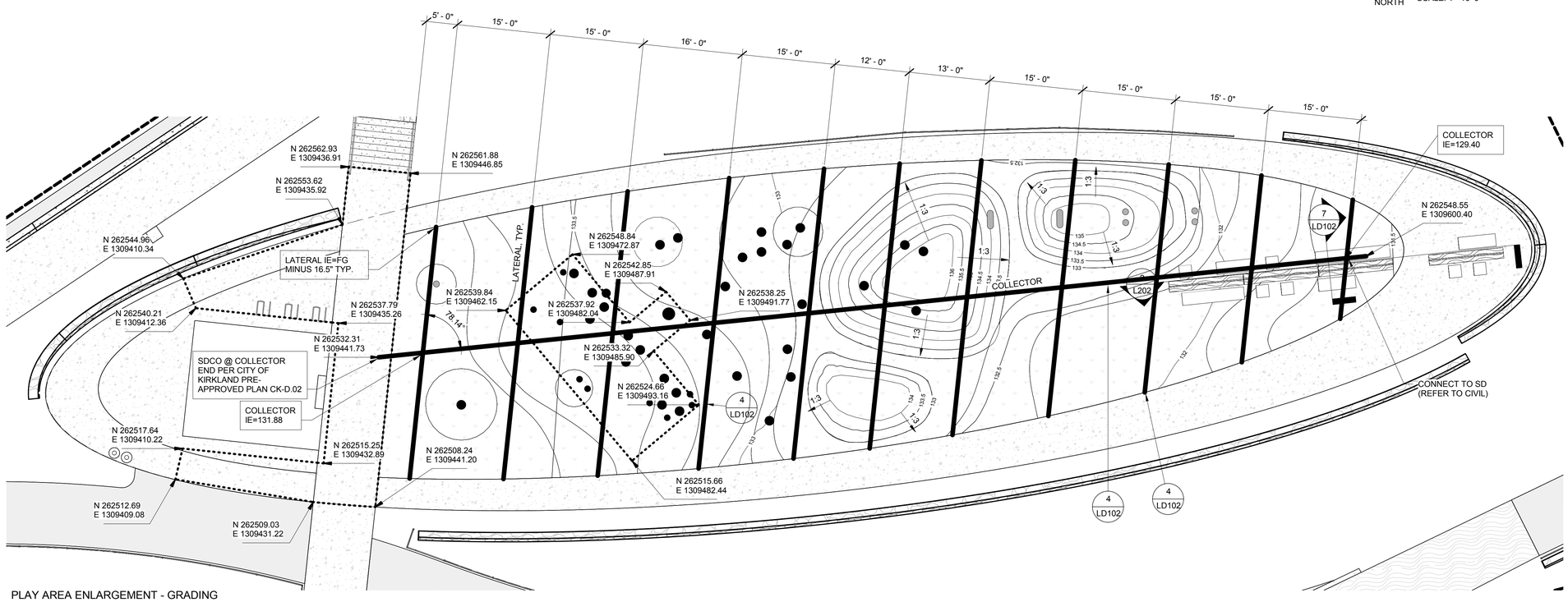

2 PLAY AREA ENLARGEMENT - GRADING AND DRAINAGE
1" = 10'-0"

PARTNERSHIP berger
1927 Post Alley, Ste. 2
Seattle, WA 98101
206 325 6877
bergerpartnership.com

Totem Lake Park Phase 1
City of Kirkland
12031 Totem Lake Way, Kirkland, WA 98034

STATE OF WASHINGTON ANDY MITTON NO. 882 EXP. 6/30/2020 LANDSCAPE ARCHITECT

SET TYPE:
Bid Set

SET ISSUE DATE:
09/13/2019

REVISIONS:

Δ	DESCRIPTION	DATE

DRAWN/CHECKED:
MM / AM

SHEET NAME:
PLAY AREA ENLARGEMENTS

SHEET NUMBER:
L400

Berger Partnership Project Number: 20154875.02
Plotted: 11/26/2019 12:08:35 PM
Filename: C:\Users\matmi\Documents\Totem Lake Park-PH1_matmi@bergerpartnership.com.rvt

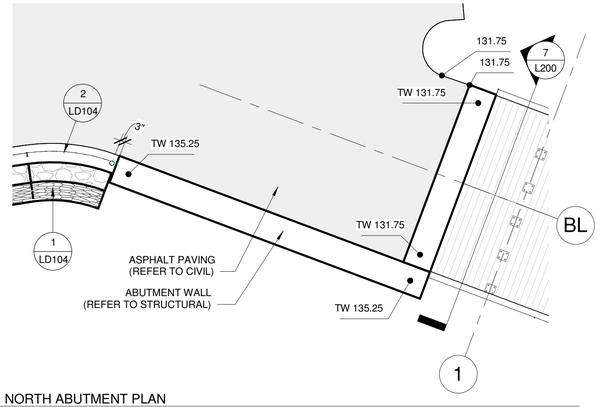

1 NORTH ABUTMENT PLAN
1/4" = 1'-0"

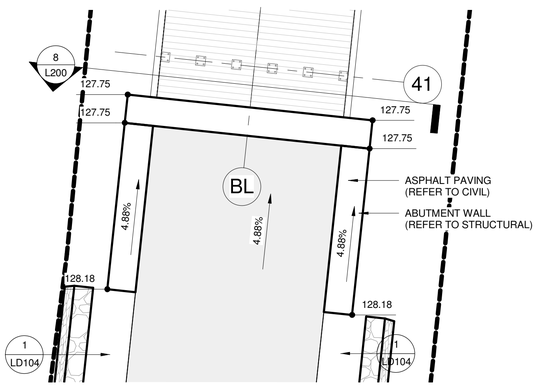

2 SOUTH ABUTMENT PLAN
1/4" = 1'-0"

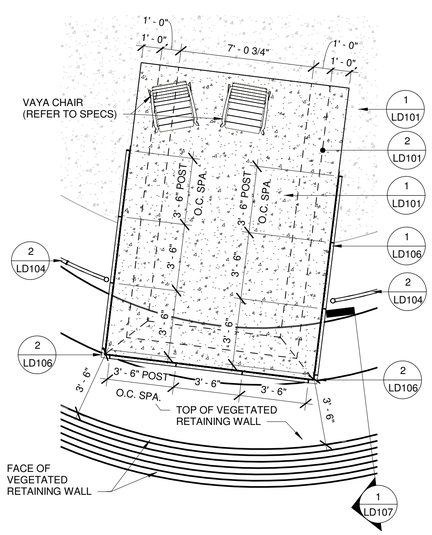

3 OVERLOOK ENLARGEMENT
1/4" = 1'-0"

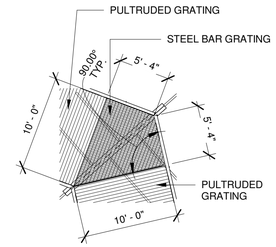

4 BOARDWALK KNUCKLE 1
1/8" = 1'-0"

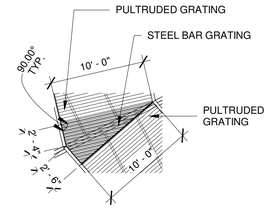

6 BOARDWALK KNUCKLE 2
1/8" = 1'-0"

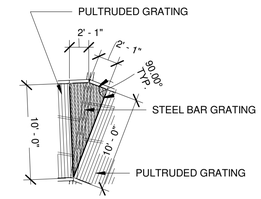

7 BOARDWALK KNUCKLE 3
1/8" = 1'-0"

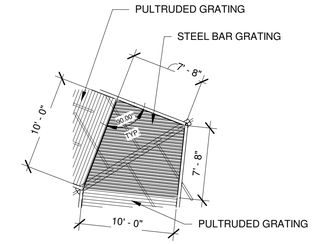

8 BOARDWALK KNUCKLE 4
1/8" = 1'-0"

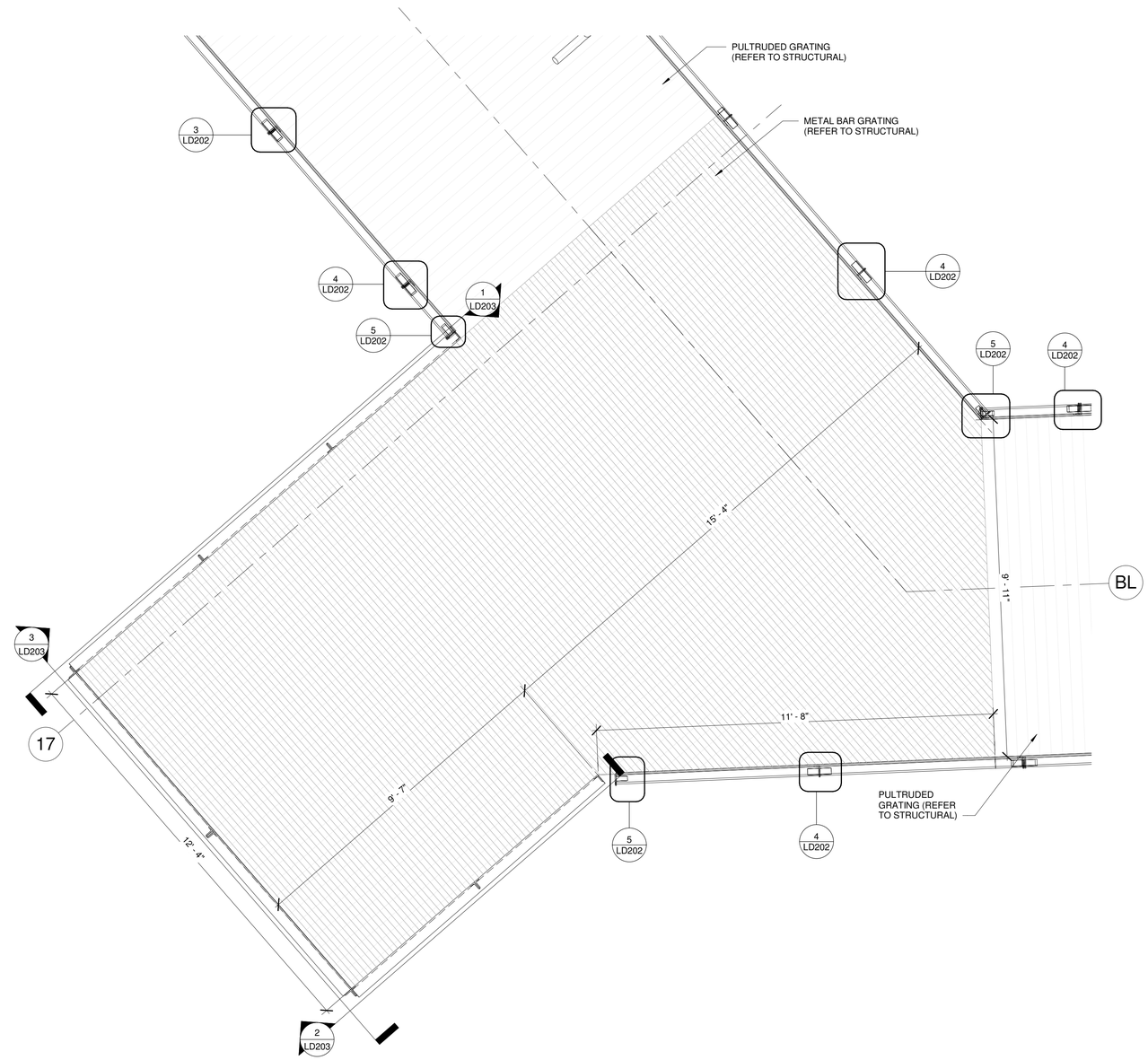

5 BOARDWALK OVERLOOK
ENLARGEMENT
1/2" = 1'-0"

PARTNERSHIP
berger
1927 Post Alley, Ste. 2
Seattle, WA 98101
206.325.6977
bergerpartnership.com

Totem Lake Park Phase 1
City of Kirkland
12031 Totem Lake Way, Kirkland, WA 98034

STATE OF WASHINGTON
ANDY MITTON
NO. 882 EXP. 6/30/2020
LANDSCAPE ARCHITECT

SET TYPE:
Bid Set

SET ISSUE DATE:
09/13/2019

REVISIONS:

Δ	DESCRIPTION	DATE

DRAWN/CHECKED:
MM / AM

SHEET NAME:
LANDSCAPE ENLARGEMENTS

SHEET NUMBER:
L401

Berger Partnership Project Number: 2015487.02 Plotted: 12/3/2019 12:50:42 PM Filename: G:\Everyone\Christine Abbott\Revit Local\Totem Lake Park-PH1_chrislinea@bergerpartnership.com.rvt

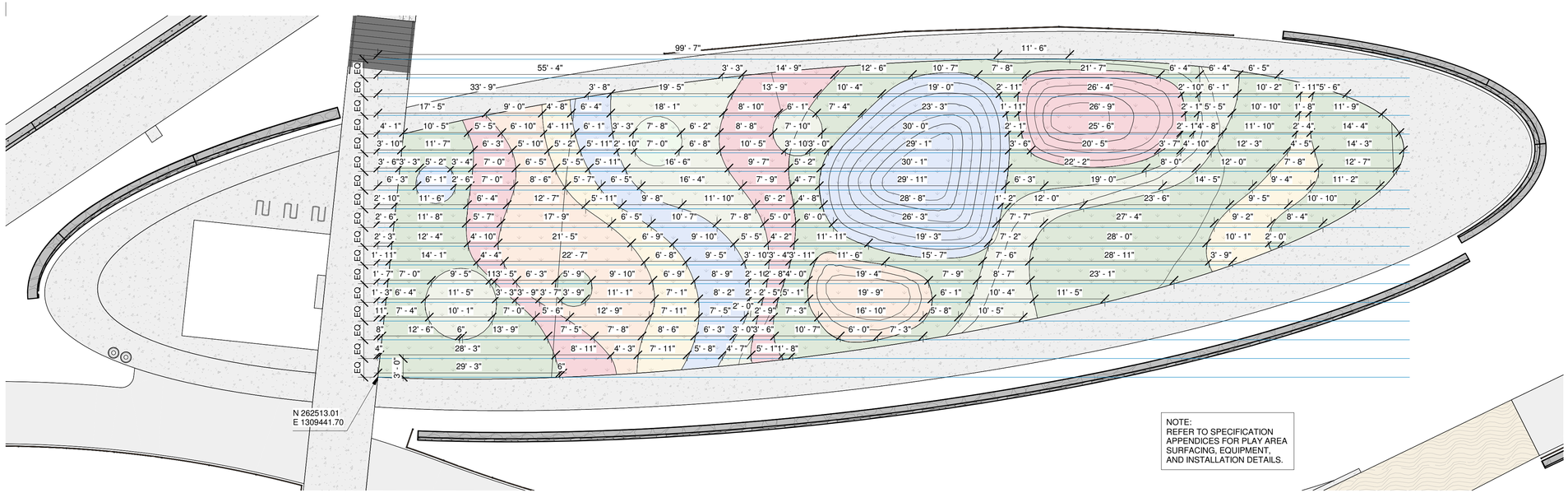

NOTE:
REFER TO SPECIFICATION APPENDICES FOR PLAY AREA SURFACING, EQUIPMENT, AND INSTALLATION DETAILS.

1 PLAY AREA ENLARGEMENT - LAYOUT
1" = 10'-0"

NORTH

0 10' 20'
SCALE: 1"=10'-0"

PARTNERSHIP berger
1927 Post Alley, Ste. 2
Seattle, WA 98101
206 325 6977
bergerpartnership.com

Totem Lake Park Phase 1
City of Kirkland
12031 Totem Lake Way, Kirkland, WA 98034

STATE OF WASHINGTON
ANDY MITTON
NO. 882 EXP. 6/30/2020
LANDSCAPE ARCHITECT

SET TYPE:
Bid Set

SET ISSUE DATE:
09/13/2019

REVISIONS:

Δ	DESCRIPTION	DATE

DRAWN/CHECKED:
Author / Checker

SHEET NAME:
PLAY AREA ENLARGEMENTS

SHEET NUMBER:
L402

Berger Partnership Project Number: 20154875.02
Plotted: 9/12/2019 11:05:40 AM
Filename: G:\Everyone\Christine Abbott\Revit Local\Totem Lake Park-PH1_christinea@bergerpartnership.com.rvt

FINISH NOTES	
Note #	Description
1	LIGHT BROOM FINISH PERPENDICULAR TO DIRECTION OF TRAVEL

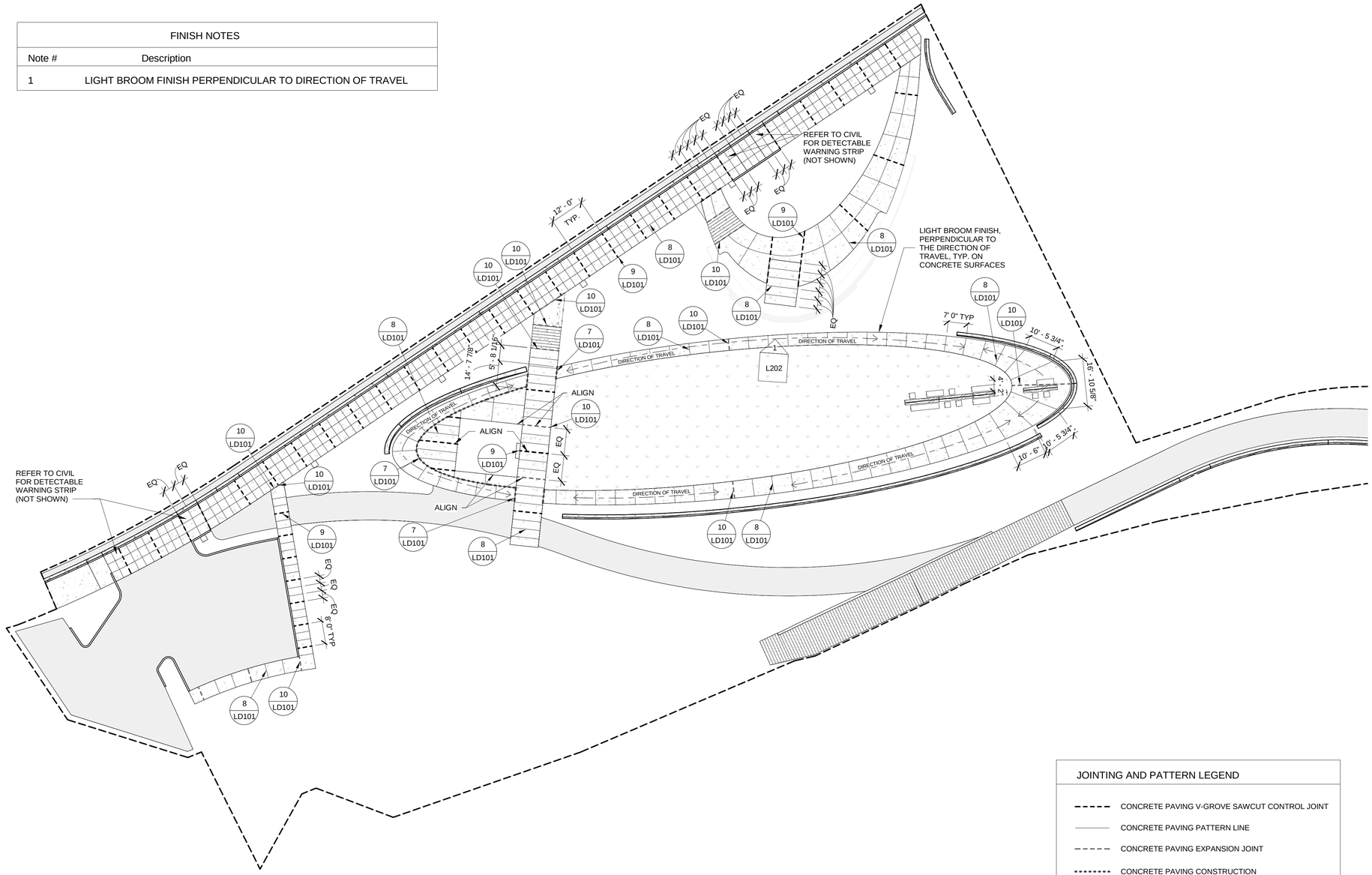

JOINTING AND PATTERN LEGEND
CONCRETE PAVING V-GROVE SAWCUT CONTROL JOINT
CONCRETE PAVING PATTERN LINE
CONCRETE PAVING EXPANSION JOINT
CONCRETE PAVING CONSTRUCTION

1 PAVING JOINT & PATTERN PLAN
1" = 20'-0"

NORTH

0 20' 40'
SCALE: 1"=20'-0"

berger PARTNERSHIP
1927 Post Alley, Ste. 2
Seattle, WA 98101
206 325 6977
bergerpartnership.com

Totem Lake Park Phase 1
City of Kirkland
12031 Totem Lake Way, Kirkland, WA 98034

STATE OF WASHINGTON
ANDY MITTON
NO. 882 EXP. 6/30/2020
LANDSCAPE ARCHITECT

SET TYPE:
Bid Set

SET ISSUE DATE:
09/13/2019

REVISIONS:

Δ	DESCRIPTION	DATE

DRAWN/CHECKED:
MM / AM

SHEET NAME:
PAVING JOINTING & PATTERN DETAIL PLAN

SHEET NUMBER:
L403

Berger Partnership Project Number: 20154875.02
Plotted: 11/20/2019 4:34:12 PM
Filename: G:\Everyone\Christine Abbott\Revit Local\Totem Lake Park-PH1_christinea@bergerpartnership.com.rvt

NOTES:
1. MAXIMUM SLOPE IN DIRECTION OF TRAVEL SHALL BE LESS THAN OR EQ. TO 4.9% UNLESS NOTED OTHERWISE.
2. MIN. CROSS SLOPE (PERPENDICULAR TO DIRECTION OF TRAVEL) SHALL BE 1%; MAX. CROSS SLOPE SHALL BE LESS THAN OR EQUAL TO 2%.
3. MEET ALL ADJACENT PAVING SURFACES IN FLUSH CONDITION UNLESS NOTED OTHERWISE.

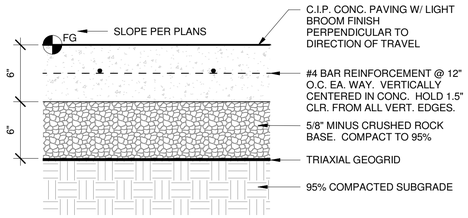

1 CONCRETE PAVING
1 1/2" = 1'-0"

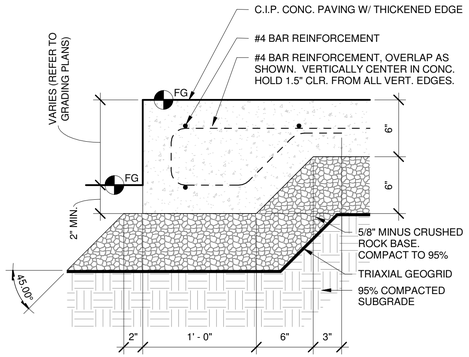

2 CONCRETE PAVING THICKENED EDGE
1 1/2" = 1'-0"

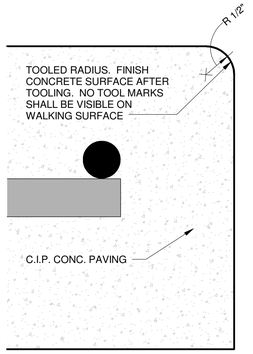

3 CONCRETE PAVING EDGE CONDITION
12" = 1'-0"

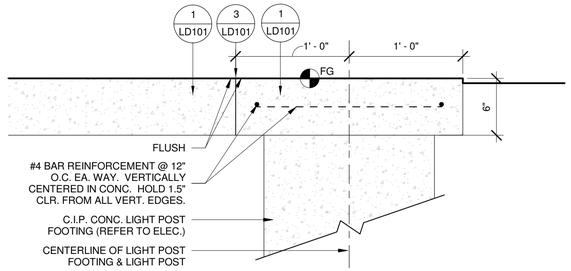

4 CONCRETE PAVING ABOVE LIGHT POST FOOTING
1 1/2" = 1'-0"

NOTES:
1. MAXIMUM SLOPE IN DIRECTION OF TRAVEL SHALL BE LESS THAN OR EQ. TO 4.9% UNLESS NOTED OTHERWISE.
2. MIN. CROSS SLOPE (PERPENDICULAR TO DIRECTION OF TRAVEL) SHALL BE 1%; MAX. CROSS SLOPE SHALL BE LESS THAN OR EQUAL TO 2%.
3. MEET ALL ADJACENT PAVING SURFACES IN FLUSH CONDITION UNLESS NOTED OTHERWISE.

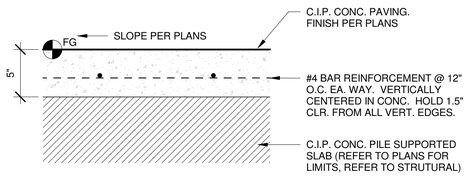

5 CONCRETE PAVING ON STRUCTURE
1 1/2" = 1'-0"

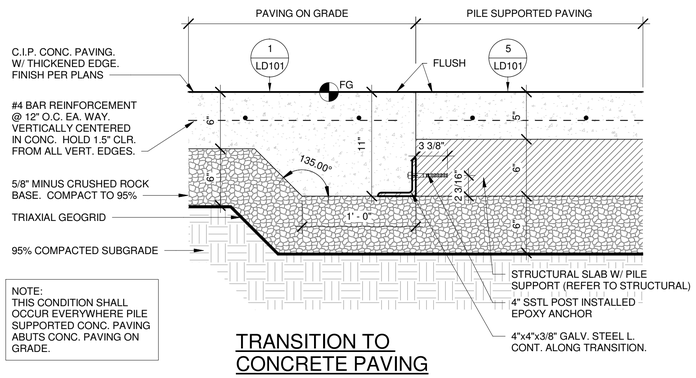

6 PAVING TRANSITIONS - ON STRUCTURE TO ON GRADE
1 1/2" = 1'-0"

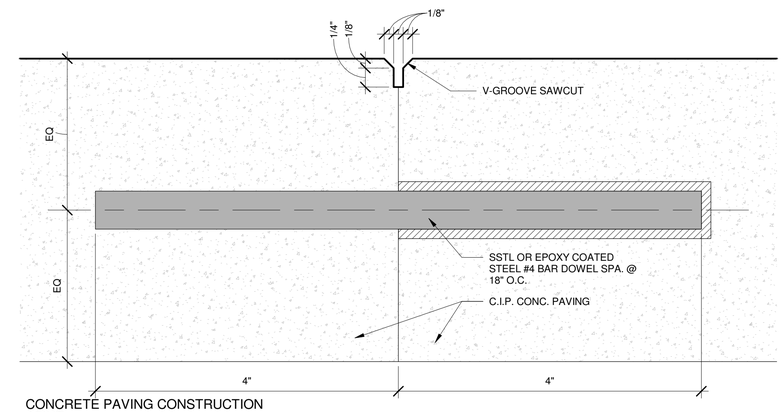

7 CONCRETE PAVING CONSTRUCTION JOINT
12" = 1'-0"

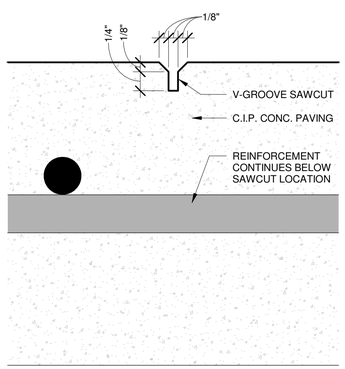

8 CONCRETE PAVING PATTERN LINE
12" = 1'-0"

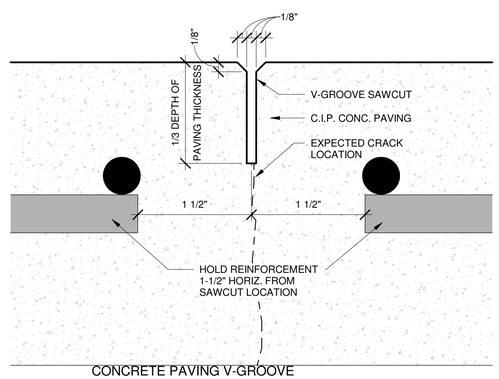

9 CONCRETE PAVING V-GROOVE SAWCUT CONTROL JOINT
12" = 1'-0"

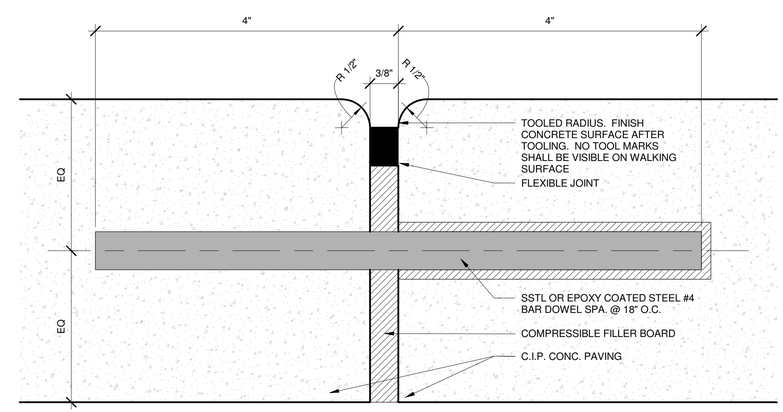

10 CONCRETE PAVING EXPANSION JOINT
12" = 1'-0"

PARTNERSHIP berger
1927 Post Alley, Ste. 2
Seattle, WA 98101
206 325 6977
bergerpartnership.com

Totem Lake Park Phase 1
City of Kirkland
12031 Totem Lake Way, Kirkland, WA 98034

STATE OF WASHINGTON
ANDY MITTON
NO. 882 EXP. 6/30/2020
LANDSCAPE ARCHITECT

SET TYPE:
Bid Set

SET ISSUE DATE:
09/13/2019

REVISIONS:

Δ	DESCRIPTION	DATE

DRAWN/CHECKED:
MM / AM

SHEET NAME:
LANDSCAPE PAVING DETAILS

SHEET NUMBER:
LD101

Berger Partnership Project Number: 20154875.02
Plotted: 9/12/2019 11:05:44 AM
Filename: G:\Everyone\Christine Abbott\Revit Local\Totem Lake Park-PH1_christinea@bergerpartnership.com.rvt

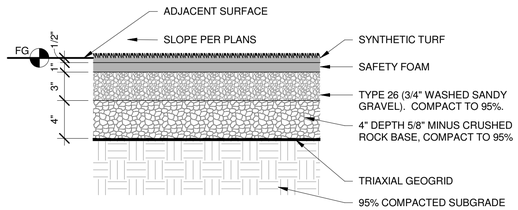

1 SYNTHETIC TURF
1 1/2" = 1'-0"

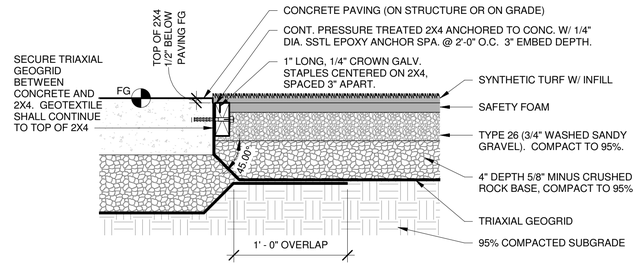

2 SYNTHETIC TURF @ CONCRETE PAVING
1 1/2" = 1'-0"

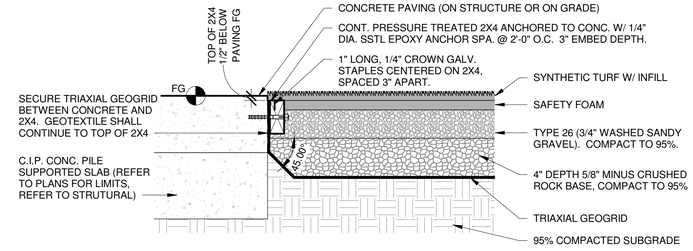

3 SYNTHETIC TURF @ CONCRETE PAVING ON STRUCTURE
1 1/2" = 1'-0"

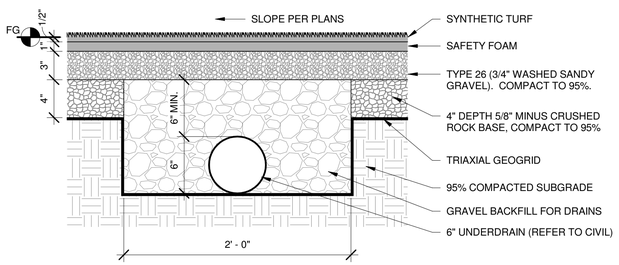

4 SYNTHETIC TURF @ FRENCH DRAIN
1 1/2" = 1'-0"

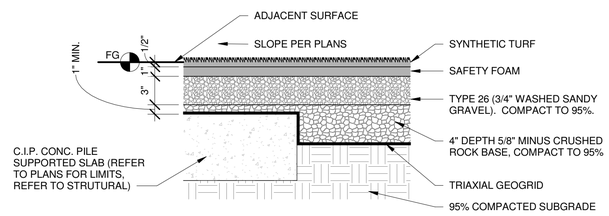

5 SYNTHETIC TURF OVER CONCRETE PAVING ON STRUCTURE
1 1/2" = 1'-0"

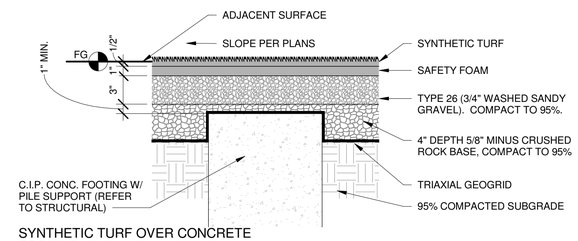

6 SYNTHETIC TURF OVER CONCRETE FOOTING
1 1/2" = 1'-0"

NOTES:
1. ALL STEEL SHALL BE HOT-DIP GALVANIZED.
2. NO THREADS SHALL PROTRUDE BEYOND BOLTS.
3. CONTRACTOR SHALL PROVIDE SHOP DRAWINGS SHOWING ALL MEMBERS, ATTACHMENTS/FASTENERS AND FINISHES.

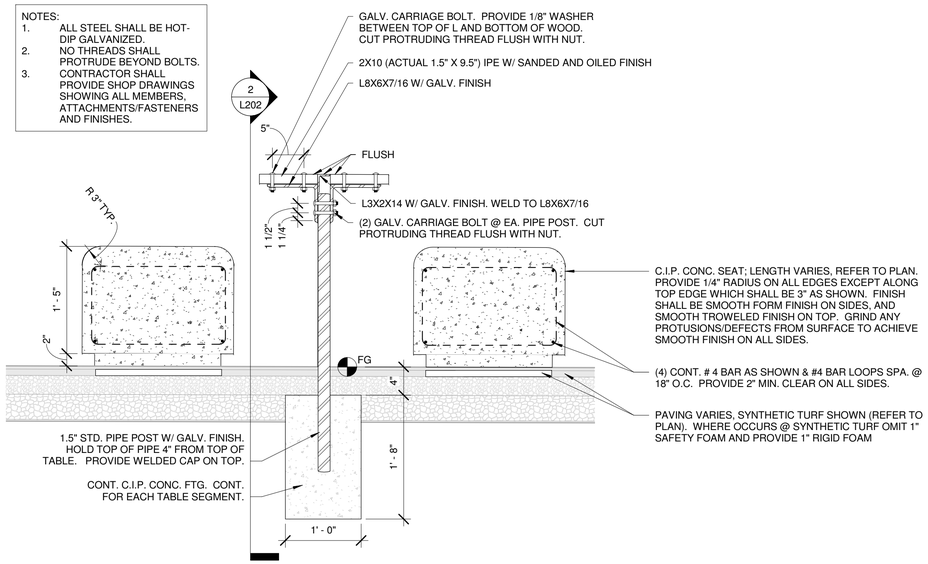

7 PICNIC TABLE AND CONCRETE SEATING
1" = 1'-0"

PARTNERSHIP berger
1927 Post Alley, Ste. 2
Seattle, WA 98101
206 325 6977
bergerpartnership.com

Totem Lake Park Phase 1
City of Kirkland
12031 Totem Lake Way, Kirkland, WA 98034

STATE OF WASHINGTON ANDY MITTON NO. 882 EXP. 6/30/2020 LANDSCAPE ARCHITECT

SET TYPE:
Bid Set

SET ISSUE DATE:
09/13/2019

REVISIONS:

Δ	DESCRIPTION	DATE

DRAWN/CHECKED:
MM / AM

SHEET NAME:
PLAY AREA DETAILS

SHEET NUMBER:
LD102

Berger Partnership Project Number: 20154875.02
Plotted: 11/25/2019 1:32:45 PM
Filename: G:\Everyone\Christine Abbott\Revit Local\Totem Lake Park-PH1_christinea@bergerpartnership.com.rvt

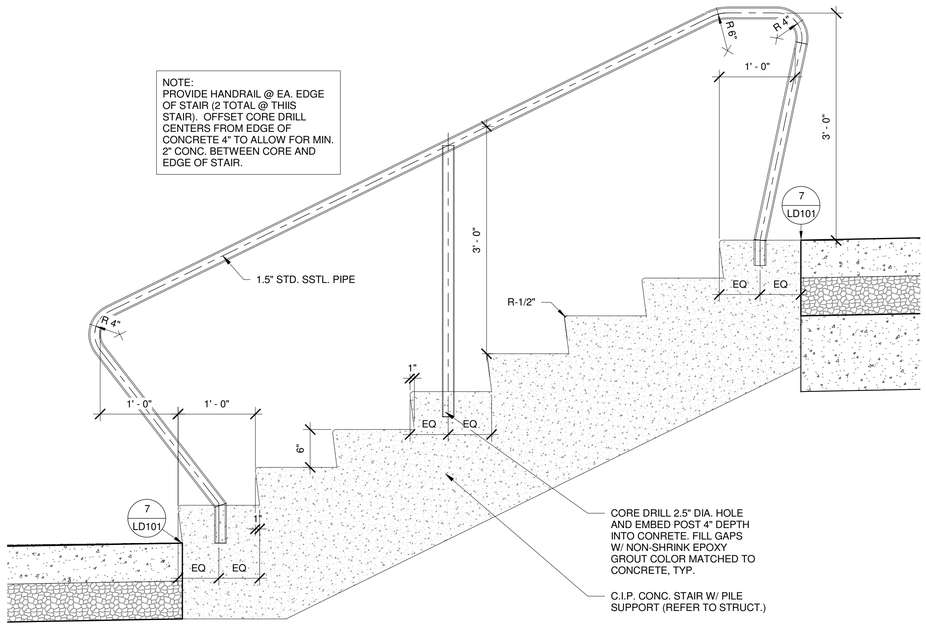

1 ENTRY STAIR SECTION
1" = 1'-0"

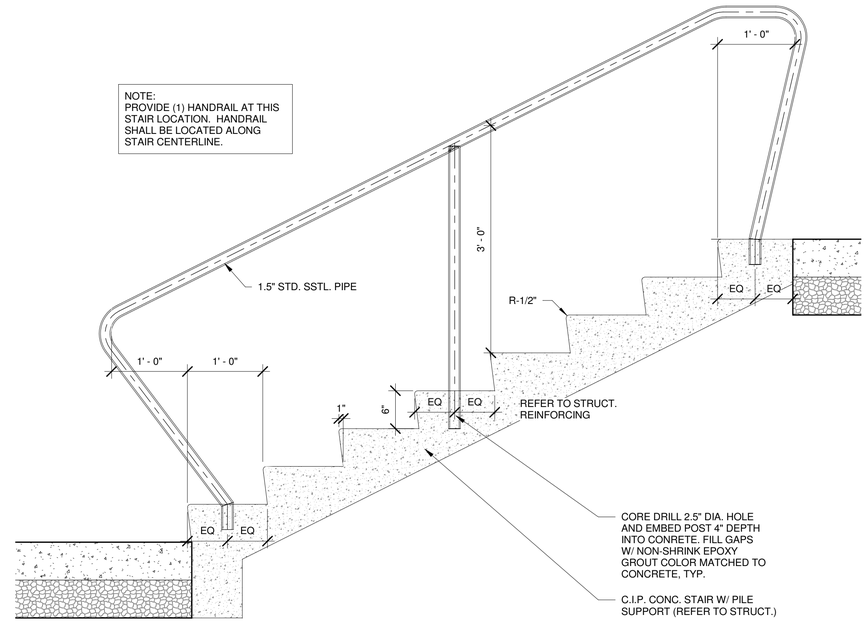

2 OVERLOOK STAIR SECTION
1" = 1'-0"

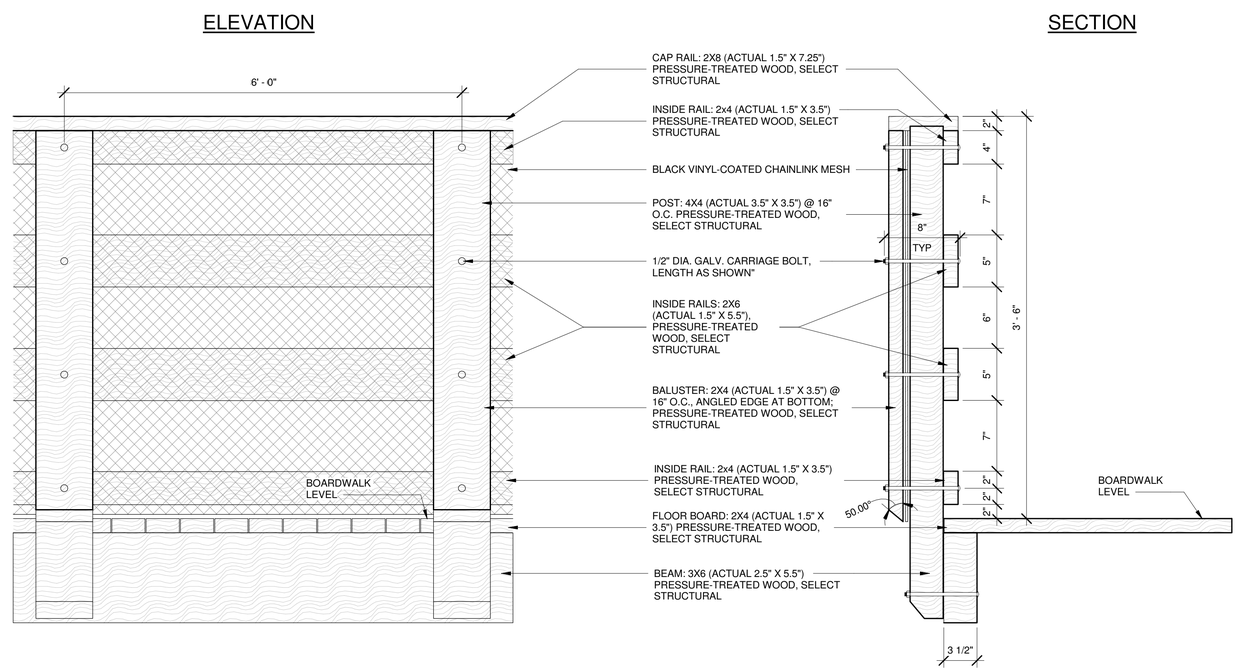

3 WOOD BOARDWALK RAILING SECTION
1 1/2" = 1'-0"

PARTNERSHIP berger
1927 Post Alley, Ste. 2
Seattle, WA 98101
206 325 6977
bergerpartnership.com

Totem Lake Park Phase 1
City of Kirkland
12031 Totem Lake Way, Kirkland, WA 98034

STATE OF WASHINGTON
ANDY MITTON
NO. 882 EXP. 6/30/2020
LANDSCAPE ARCHITECT

SET TYPE:
Bid Set

SET ISSUE DATE:
09/13/2019

REVISIONS:

Δ	DESCRIPTION	DATE

DRAWN/CHECKED:
MM / AM

SHEET NAME:
STAIR & RAILING DETAILS

SHEET NUMBER:
LD103

Berger Partnership Project Number: 20154875.02
Plotted: 11/25/2019 1:33:24 PM
Filename: G:\Everyone\Christine Abbott\Revit Local\Totem Lake Park-PH1_christinea@bergerpartnership.com.rvt

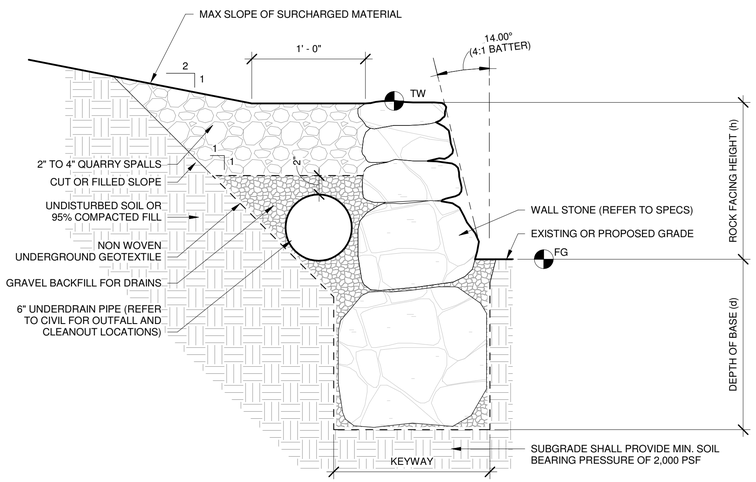

SECTION 'h' >3'-0"

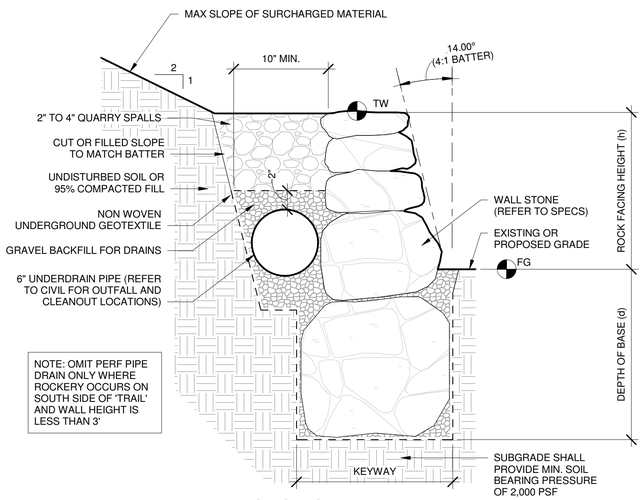

NOTE: OMIT PERF PIPE DRAIN ONLY WHERE ROCKERY OCCURS ON SOUTH SIDE OF 'TRAIL' AND WALL HEIGHT IS LESS THAN 3'

SECTION 'h' <3'-0"

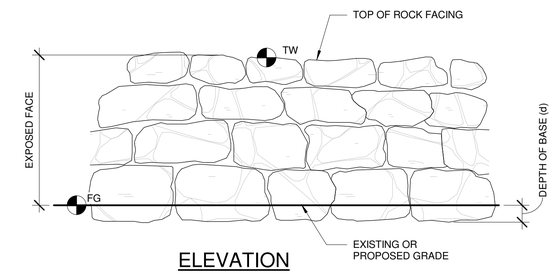

ELEVATION

DESIGN PARAMETERS

(h)	(d)	SIZE(BASE)	SIZE(TOP)
2 FEET	18 INCHES	2-MAN	1-MAN
4 FEET	18 INCHES	3-MAN	2-MAN
6 FEET	18 INCHES	4-MAN	2-MAN
8 FEET	18 INCHES	5-MAN	2-MAN

ROCK SIZES

SIZE	APPROX. WEIGHT	MIN. APPROX. DIMENSIONS	APPROX.VOLUME)
1-MAN ROCK	200-400 LBS.	12 INCHES	2 CF
2-MAN ROCK	500-800 LBS.	13 INCHES	4 CF
3-MAN ROCK	900-1200 LBS.	16 INCHES	6.6 CF
4-MAN ROCK	1300-2000 LBS.	18 INCHES	12.5 CF
5-MAN ROCK	2000-4000 LBS.	24 INCHES	18.5 CF
6-MAN ROCK	4100-6000 LBS.	30 INCHES	31 CF

1 ROCKERY RETAINING WALL
1 1/2" = 1'-0"

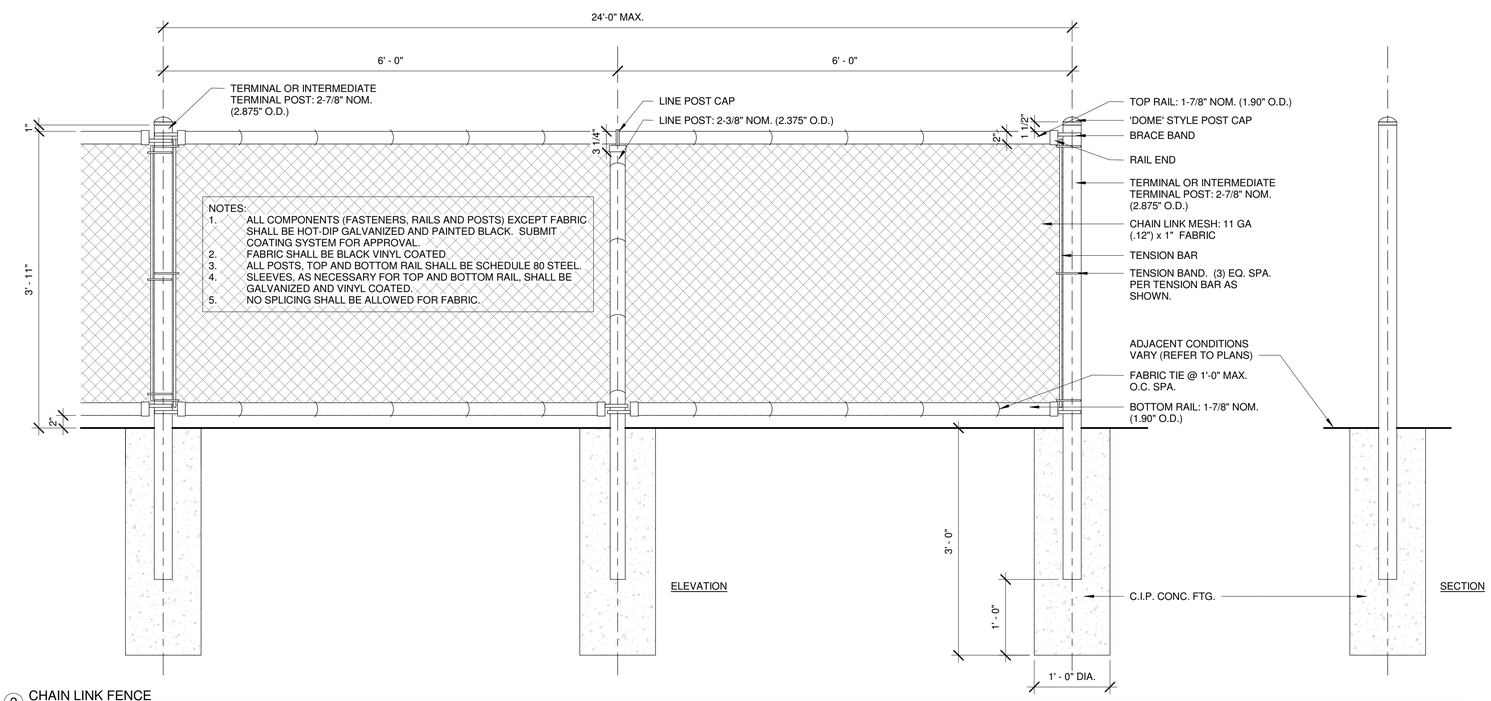

NOTES:
1. ALL COMPONENTS (FASTENERS, RAILS AND POSTS) EXCEPT FABRIC SHALL BE HOT-DIP GALVANIZED AND PAINTED BLACK. SUBMIT COATING SYSTEM FOR APPROVAL.
2. FABRIC SHALL BE BLACK VINYL COATED.
3. ALL POSTS, TOP AND BOTTOM RAIL SHALL BE SCHEDULE 80 STEEL.
4. SLEEVES, AS NECESSARY FOR TOP AND BOTTOM RAIL, SHALL BE GALVANIZED AND VINYL COATED.
5. NO SPLICING SHALL BE ALLOWED FOR FABRIC.

2 CHAIN LINK FENCE
1" = 1'-0"

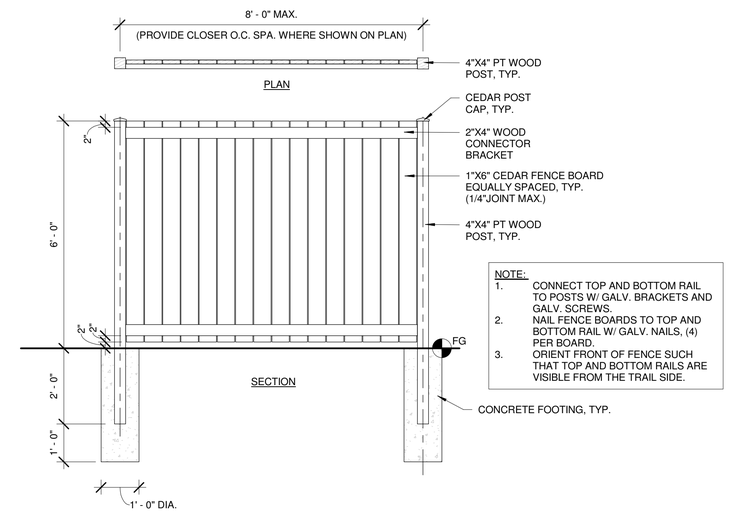

NOTE:
1. CONNECT TOP AND BOTTOM RAIL TO POSTS W/ GALV. BRACKETS AND GALV. SCREWS.
2. NAIL FENCE BOARDS TO TOP AND BOTTOM RAIL W/ GALV. NAILS, (4) PER BOARD.
3. ORIENT FRONT OF FENCE SUCH THAT TOP AND BOTTOM RAILS ARE VISIBLE FROM THE TRAIL SIDE.

3 WOOD FENCE
1/2" = 1'-0"

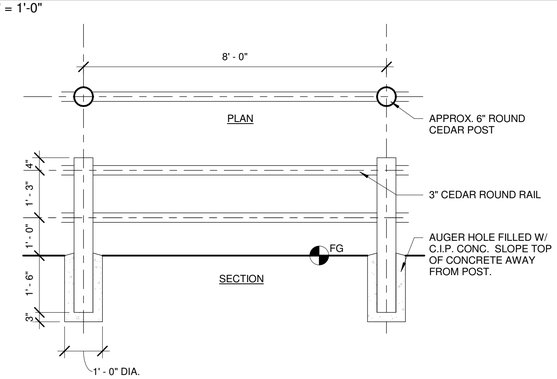

4 ROUND RAIL FENCE
1/2" = 1'-0"

PARTNERSHIP berger
1927 Post Alley, Ste. 2
Seattle, WA 98101
206.325.6977
bergerpartnership.com

Totem Lake Park Phase 1

City of Kirkland

12031 Totem Lake Way, Kirkland, WA 98034

STATE OF WASHINGTON ANDY MITTON NO. 882 EXP. 6/30/2020 LANDSCAPE ARCHITECT

SET TYPE:
Bid Set

SET ISSUE DATE:
09/13/2019

REVISIONS:

Δ	DESCRIPTION	DATE

DRAWN/CHECKED:
MM / AM

SHEET NAME:
WALL & FENCE DETAILS

SHEET NUMBER:
LD104

Berger Partnership Project Number: 20154875.02
Plotted: 12/2/2019 5:16:26 PM
Filename: G:\Everyone\Christine Abbott\Revit Local\Totem Lake Park-PH1_christinea@bergerpartnership.com.rvt

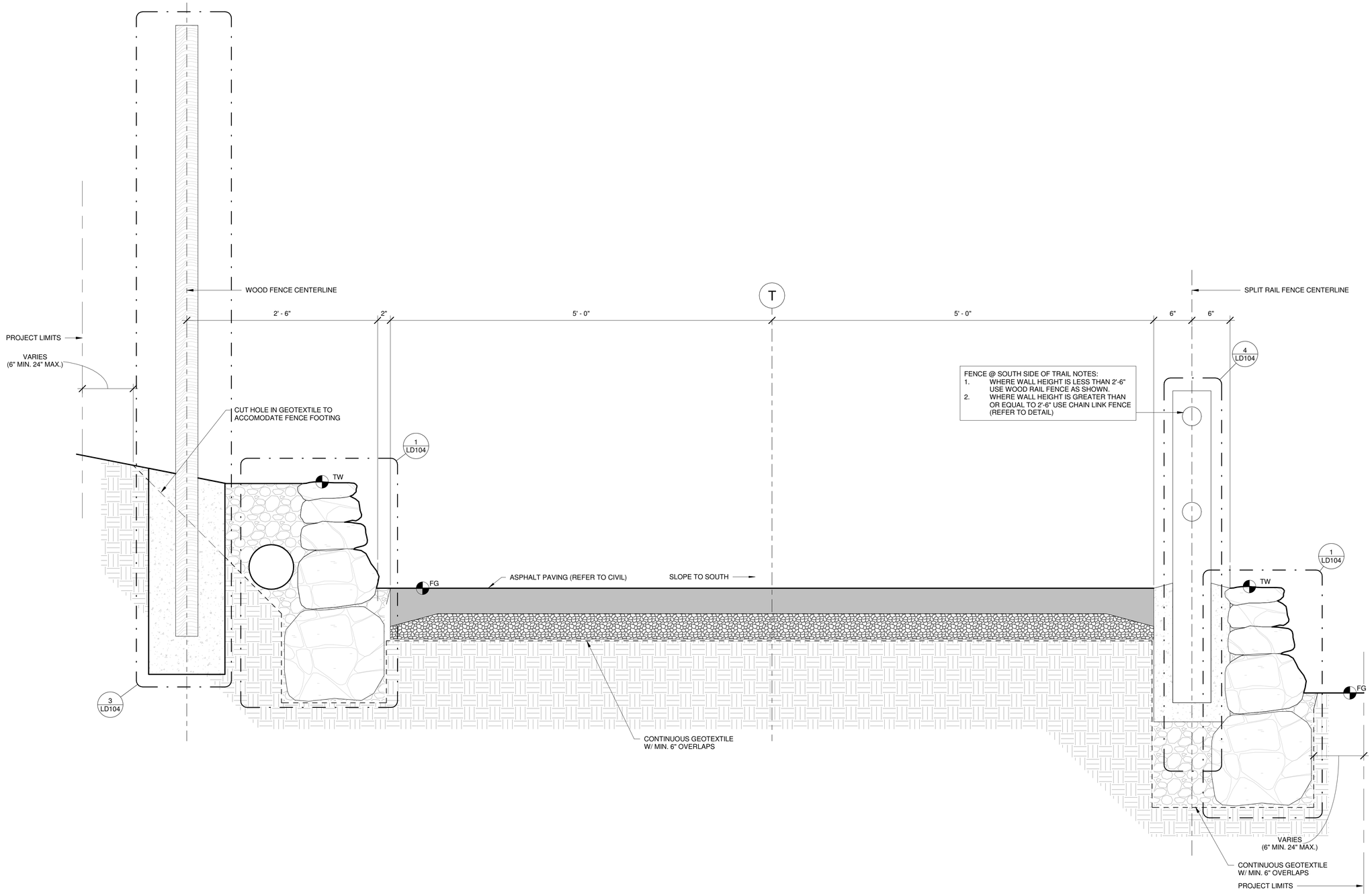

1 TRAIL TYPICAL SECTION
1 1/2" = 1'-0"

berger PARTNERSHIP
1927 Post Alley, Ste. 2
Seattle, WA 98101
206 325 6877
bergerpartnership.com

Totem Lake Park Phase 1

City of Kirkland

12031 Totem Lake Way, Kirkland, WA 98034

STATE OF WASHINGTON
ANDY MITTON
NO. 882 EXP. 6/30/2020
LANDSCAPE ARCHITECT

SET TYPE:
Bid Set

SET ISSUE DATE:
09/13/2019

REVISIONS:

Δ	DESCRIPTION	DATE

DRAWN/CHECKED:
MM / AM

SHEET NAME:
TRAIL TYPICAL DETAIL

SHEET NUMBER:
LD105

Berger Partnership Project Number: 2015487S.02
Plotted: 9/12/2019 11:05:52 AM
Filename: G:\Everyone\Christine Abbott\Revit Local\Totem Lake Park-PH1_christinea@bergerpartnership.com.rvt

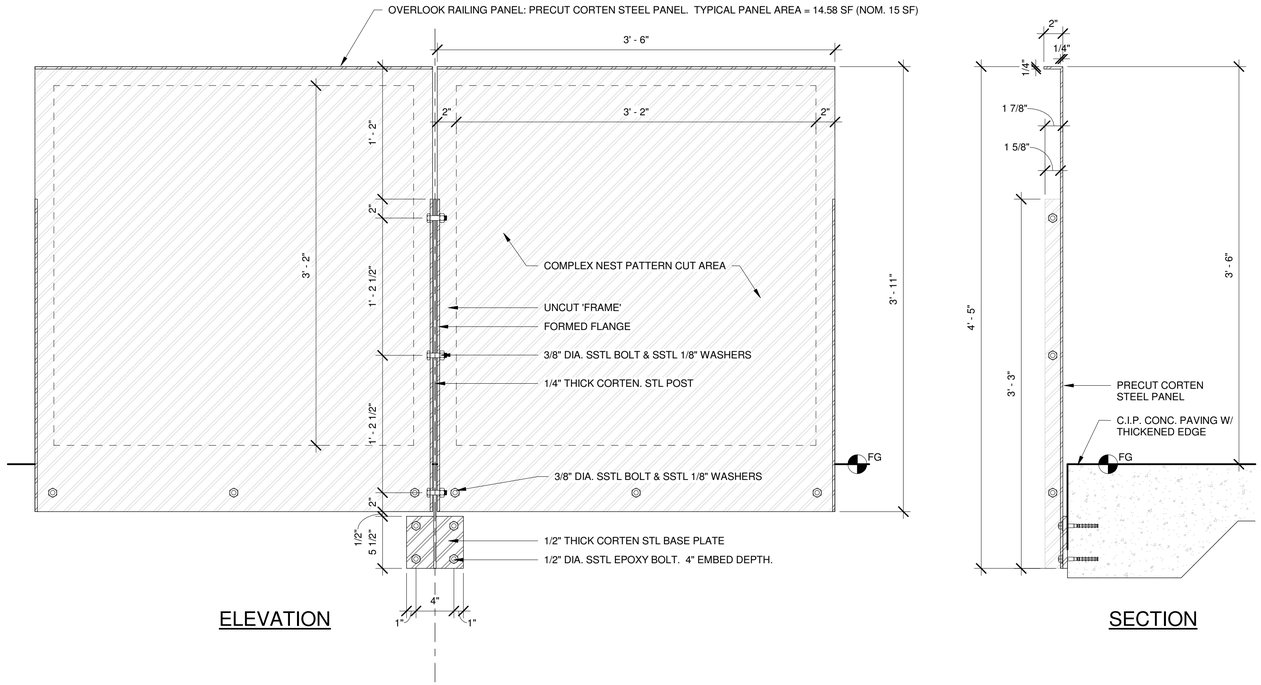

1 OVERLOOK GUARDRAIL W/ POST
1 1/2" = 1'-0"

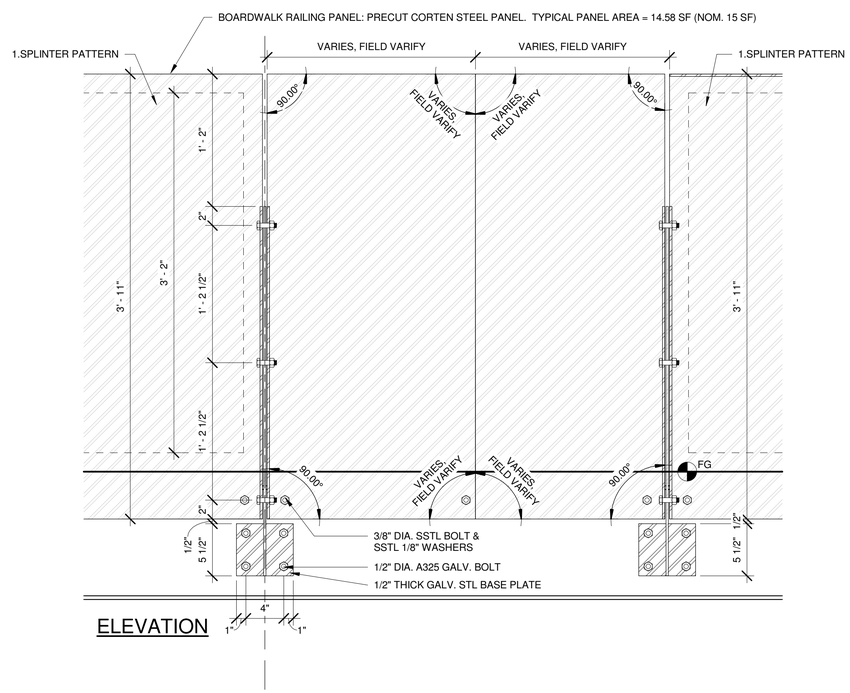

2 OVERLOOK GUARDRAIL @ CORNERS
1 1/2" = 1'-0"

berger PARTNERSHIP
1927 Post Alley, Ste. 2
Seattle, WA 98101
206 325 6977
bergerpartnership.com

Totem Lake Park Phase 1
City of Kirkland
12031 Totem Lake Way, Kirkland, WA 98034

STATE OF WASHINGTON
ANDY MITTON
NO. 982 EXP. 6/30/2020
LANDSCAPE ARCHITECT

SET TYPE:
Bid Set

SET ISSUE DATE:
09/13/2019

REVISIONS:

Δ	DESCRIPTION	DATE

DRAWN/CHECKED:
MM / AM

SHEET NAME:
OVERLOOK DETAILS

SHEET NUMBER:
LD106

Berger Partnership Project Number: 20154875.02
Plotted: 9/12/2019 11:05:53 AM
Filename: G:\Everyone\Christine Abbott\Revit Local\Totem Lake Park-PH1_christinea@bergerpartnership.com.rvt

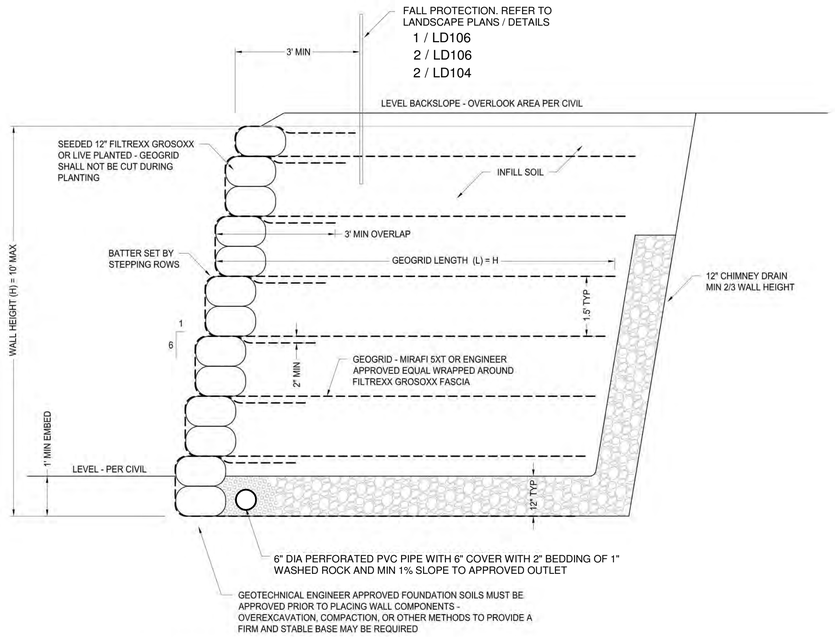

CROSS-SECTION: REINFORCED SLOPE
NO SCALE

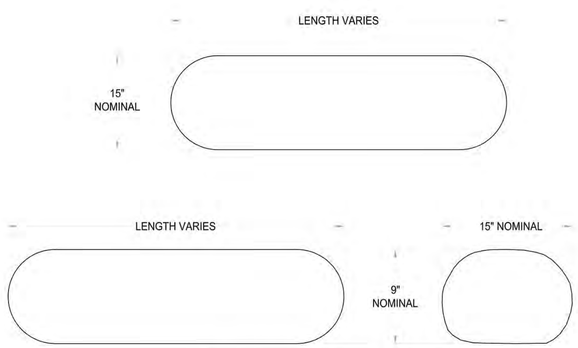

NOTE: GROSOXX ARE 12-INCH DIAMETER TUBES THAT DEFORM TO NOMINALLY 9-INCHES TALL AND 15-INCHES WIDE.

GREENLOXX 12" DIA GROSOXX MODULE DIMENSION DETAIL
NO SCALE

DESIGN NOTES:
THE FOLLOWING DESIGN VALUES WERE USED:
INTERNAL ANGLE OF FRICTION FOR REINFORCED SOIL = 34 DEGREES
UNIT WEIGHT OF SOIL = 125LB/CU FT
MAXIMUM = HEIGHT = 10' MAXIMUM
BATTER OF WALL = 1H:6V
BACKFILL SLOPE = LEVEL
COURSES BURIED = 1' EMBEDMENT

1. CONTRACTOR TO VERIFY ALL LOCATIONS, ELEVATIONS, AND DIMENSIONS.

2. FOR BIDDING PURPOSES, THE DESIGN WALL HEIGHT SHALL INCLUDE BOTH THE ABOVE GRADE DIMENSIONS SHOWN ON THE CIVIL PLANS AND THE BELOW GRADE EMBEDDED PORTION OF THE WALL INDICATED HEREIN.

GENERAL NOTES:

DRAINAGE AGGREGATE
1. DRAINAGE LAYER MATERIALS, INCLUDING THE CHIMNEY DRAIN, SHALL BE 2-INCH WASHED CRUSH ROCK MATERIAL AND FREE OF ORGANICS, WITH LESS THAN 5% FINES (SILT AND CLAY PARTICLES PASSING THE #200 SIEVE MEASURED ON THE MINUS #4 SIEVE SIZE) (WSDOT 9-03.9(2)).

INFILL SOIL - (REINFORCED AND RETAINED SOIL ZONE)
1. REINFORCED SOIL SHALL BE FREE OF DEBRIS AND CONSIST OF GRANULAR ONSITE SAND OR IMPORTED SOIL. THE MAXIMUM PARTICLE SIZE SHALL BE 4 INCHES. THERE SHALL BE LESS THAN 20% BY WEIGHT OF PARTICLES GREATER THAN 1-1/2 INCHES AND AT LEAST 25% RETAINED ON THE NO. 4 SIEVE.

2. THE INFILL SOIL SHALL BE PLACED IN MAXIMUM 8-INCH LIFTS AND COMPACTED TO AT LEAST 95% OF THE MODIFIED PROCTOR MAXIMUM DENSITY AS DEFINED BY ASTM D-1557.

EXCAVATION
1. WHEN NEEDED EXCAVATE TO LINES AND GRADES SHOWN ON THE CONSTRUCTION DRAWINGS. TAKE PRECAUTIONS TO MINIMIZE OVER-EXCAVATION. OVER-EXCAVATION SHALL BE BACKFILLED WITH APPROVED COMPACTED STRUCTURAL FILL.

EXCAVATION BASE PREPARATION

1. INSPECT EXCAVATION BASE PRIOR TO PLACEMENT OF REINFORCED FILL MATERIAL.

2. IN AREAS WHERE SOFT, DISTURBED OR OTHERWISE UNSUITABLE SOILS ARE ENCOUNTERED WITHIN THE ZONE OF THE WALL LOADING IN THE EXCAVATIONS, SUCH UNSUITABLE SOILS SHALL BE OVER-EXCAVATED TO THE DEPTHS AND EXTENTS REQUIRED BY THE GEOTECHNICAL ENGINEER, AND REPLACED WITH STRUCTURAL FILL COMPACTED TO A MINIMUM 95% OF THE MODIFIED PROCTOR, MAXIMUM DENSITY AS DEFINED BY ASTM D:1557.

GEOGRID INSTALLATION
1. GEOGRID SHALL BE ORIENTED WITH THE HIGHEST STRENGTH AXIS PERPENDICULAR TO THE SLOPE FACE. VERIFY ORIENTATION (ROLL DIRECTION) OF GEOGRID REINFORCEMENT.

2. INSTALL GEOGRID TO SLOPE HEIGHT, HORIZONTAL LOCATION, AND EXTENT AS SHOWN ON THE DRAWINGS.

3. LAY THE GEOGRID HORIZONTALLY ON COMPACTED BACKFILL AS THE STRUCTURAL FILL IS BEING CONSTRUCTED. PLACE TURF REINFORCEMENT MAT ON GRID AT SLOPE FACE. PULL GEOGRID AND MAT TAUT AND WRAP THE GEOGRID OVER THE FACE OF THE FILL PER DETAIL.

4. GEOGRID SHALL BE CONTINUOUS THROUGHOUT THEIR EMBEDMENT LENGTHS. SPLICED CONNECTIONS BETWEEN SHORTER PIECES WILL NOT BE ALLOWED.

5. DO NOT OPERATE TRACKED CONSTRUCTION EQUIPMENT DIRECTLY UPON GEOGRID. PROVIDE A MINIMUM FILL THICKNESS OF 6 INCHES PRIOR TO OPERATION OF TRACKED EQUIPMENT OVER GEOGRID. KEEP TRACKED VEHICLE TURNING TO MINIMUM TO PREVENT TRACKS FROM DISPLACING THE FILL AND DAMAGING GEOGRID.

6. RUBBER-TIRED EQUIPMENT MAY PASS OVER GEOGRID AT LOW SPEEDS, LESS THAN 10 MPH, IF PERMITTED BY THE MANUFACTURER. AVOID SUDDEN BRAKING AND SHARP TURNING.

7. CHANGES TO GEOGRID LAYOUT, INCLUDING, BUT NOT LIMITED TO, LENGTH, SOIL REINFORCEMENT TYPE (STRENGTH), OR ELEVATION, MAY BE MADE SUBJECT TO APPROVAL OF THE ENGINEER.

8. HAND CUT GEOGRID FOR FALL PROTECTION INSTALLATION. DO NOT AUGER THROUGH GEOGRID.

FILL PLACEMENT OVER GEOGRID
1. REINFORCED FILL MATERIAL SHALL BE PLACED IN MAXIMUM 8-INCH LOOSE LIFTS ON THE GEOSYNTHETIC REINFORCEMENT.

2. THE GEOGRID SHALL BE PRETENSIONED BY HAND TO REMOVE WRINKLES. TENSIONING IS USUALLY FACILITATED BY THE USE OF STEEL STAKES. APPLY CONSTANT TENSION TO EACH SECTION OF GEOGRID UNTIL SOIL FILL HAS BEEN PLACED. SOIL FILL SHALL BE PLACED, SPREAD, AND COMPACTED IN SUCH A MANNER THAT PREVENTS THE DEVELOPMENT OF WRINKLES AND/OR MOVEMENT OF THE GEOGRID.

3. ONLY HAND-OPERATED COMPACTION EQUIPMENT SHALL BE ALLOWED WITHIN 3 FEET OF THE SLOPE FACE.

4. IF POSSIBLE, SOIL FILL SHALL BE PLACED FROM THE SLOPE FACE OUTWARD TO ENSURE THAT THE GEOGRID REMAINS TAUT. SOIL SHALL BE PLACED IN UNIFORM LIFTS.

5. COMPACT GEOGRID REINFORCED BACKFILL TO A MINIMUM OF 95% STANDARD PROCTOR MAXIMUM DRY DENSITY (ASTM D1557) AT A MOISTURE CONTENT FROM 3% BELOW TO 3% ABOVE OPTIMUM.

6. COMPACT GEOGRID REINFORCED BACKFILL IN ALL AREAS TO THE LINES AND GRADES SHOWN ON THE CONSTRUCTION DRAWINGS INCLUDING ALL SLOPED AREAS.

7. AT THE END OF EACH DAY'S OPERATION, SLOPE THE LAST LIFT OF REINFORCED BACKFILL AWAY FROM THE SLOPE FACE TO RAPIDLY DIRECT RUNOFF AWAY FROM THE SLOPE FACE. DO NOT ALLOW SURFACE RUNOFF FROM ADJACENT AREAS TO ENTER THE CONSTRUCTION SITE.

8. SURFACE DRAINAGE DURING AND AFTER CONSTRUCTION OF THE REINFORCED WALL SHALL BE PROVIDED TO MINIMIZE WATER INFILTRATION IN THE REINFORCED SOIL ZONE.

INSPECTIONS
1. FULL-TIME INSPECTION OF THE REINFORCED WALL CONSTRUCTION, INCLUDING FOUNDATION SOIL PREPARATION, GEOGRID PLACEMENT, AND DRAINAGE, BY THE GEOTECHNICAL ENGINEER IS REQUIRED.

1 VEGETATED RETAINING WALL DETAIL
12" = 1'-0"

associated earth sciences incorporated
911 Fifth Avenue, Kirkland, WA 98033, (425) 827.7701, aesgeo.com
1532 Commerce Street, Suite 102, Tacoma, WA 98402, (253) 722.2992, aesgeo.com
2911 1/2 Hewitt, Suite 2, Everett, WA 98201, (425) 259.0522, aesgeo.com

GREENLOXX MSE WALL
TOTEM LAKE PARK
KIRKLAND, WASHINGTON

DRAWN BY:	EIN
CHECKED BY:	JPL
DATE	6/18
PROJECT NO.	170126E001
SHEET	1

berger PARTNERSHIP
1927 Post Alley, Ste. 2, Seattle, WA 98101
206.325.6977, bergerpartnership.com

Totem Lake Park Phase 1
City of Kirkland
12031 Totem Lake Way, Kirkland, WA 98034

STATE OF WASHINGTON ANDY MITTON NO. 882 EXP. 6/30/2020 LANDSCAPE ARCHITECT

SET TYPE:
Bid Set

SET ISSUE DATE:
09/13/2019

REVISIONS:

Δ	DESCRIPTION	DATE

DRAWN/CHECKED:
MM / AM

SHEET NAME:
GEOTECHNICAL WALL DETAIL

SHEET NUMBER:
LD107

170126 Totem Lk Pk \ 170126 Fill Slope.dwg LAYOUT: E001 F1 Fill Slope
Plotted: 9/12/2019 11:05:54 AM Filename: G:\Everyone\Christine Abbott\Revit Local\Totem Lake Park-PH1_christinea@bergerpartnership.com.rvt
Berger Partnership Project Number: 20154875.02

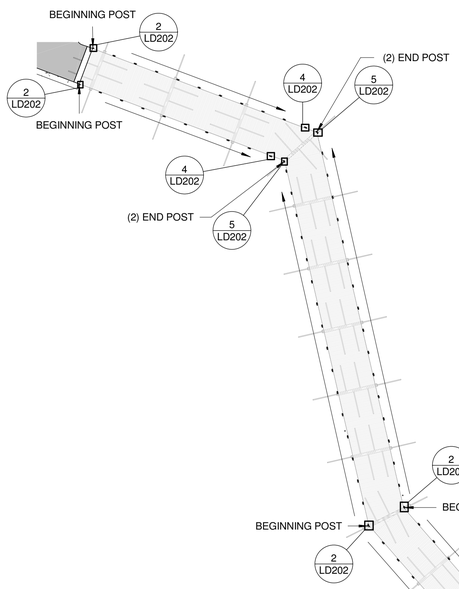

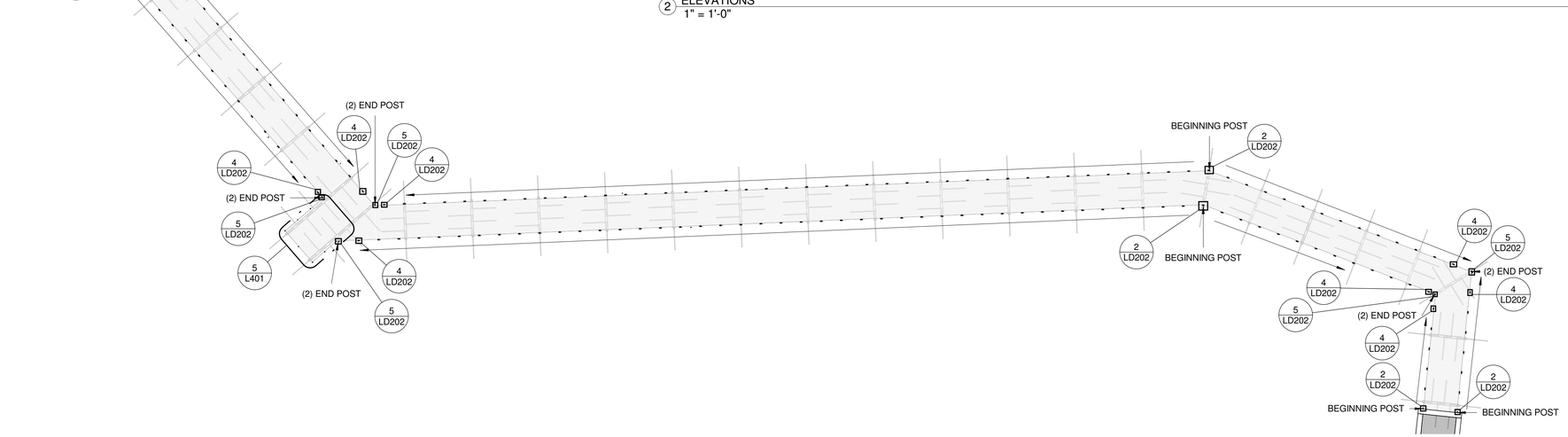

1 BOARDWALK RAILING POST PLAN
1" = 20'-0"

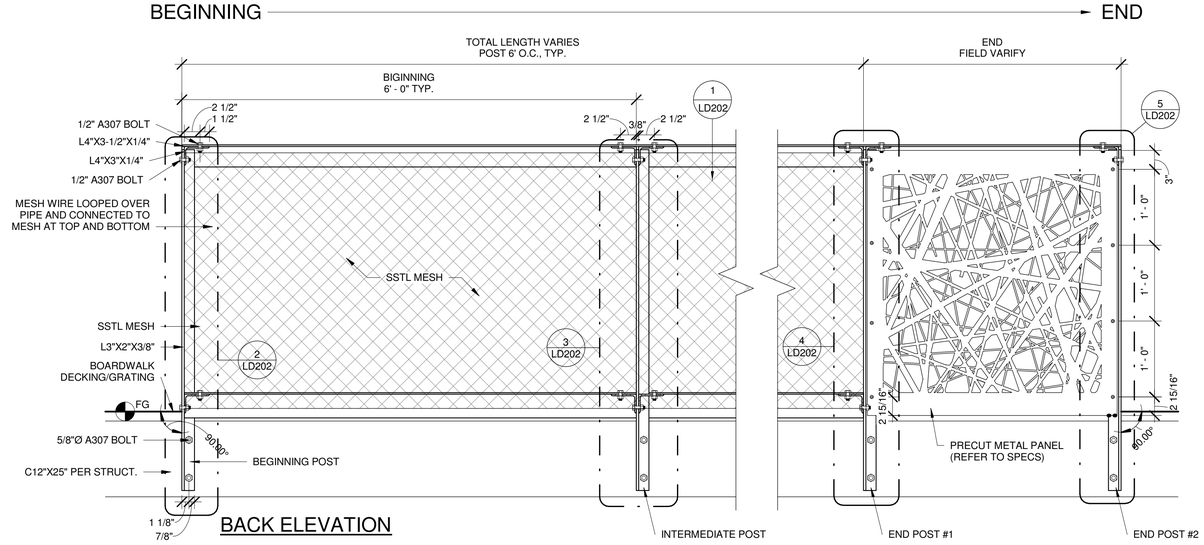

BACK ELEVATION

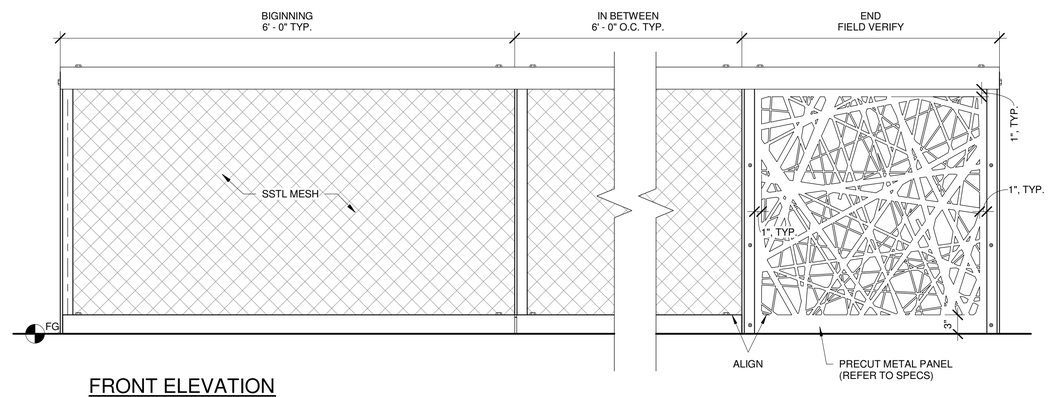

FRONT ELEVATION

2 BOARDWALK RAILING TYPICAL ELEVATIONS
1" = 1'-0"

berger PARTNERSHIP
1927 Post Alley, Ste. 2
Seattle, WA 98101
206 325 6977
bergerpartnership.com

Totem Lake Park Phase 1
City of Kirkland
12031 Totem Lake Way, Kirkland, WA 98034

SET TYPE:
Bid Set

SET ISSUE DATE:
09/13/2019

REVISIONS:

Δ	DESCRIPTION	DATE

DRAWN/CHECKED:
Author / Checker

SHEET NAME:
METAL GUARDRAIL DETAILS

SHEET NUMBER:
LD200

Berger Partnership Project Number: 20154875.02
Plotted: 9/12/2019 11:05:57 AM
Filename: G:\Everyone\Christine Abbott\Revit Local\Totem Lake Park-PH1_christinea@bergerpartnership.com.rvt

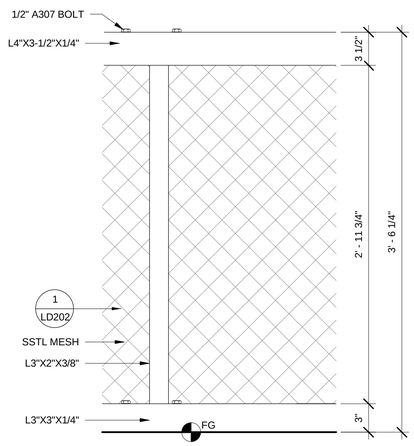

FRONT ELEVATION
@ POST

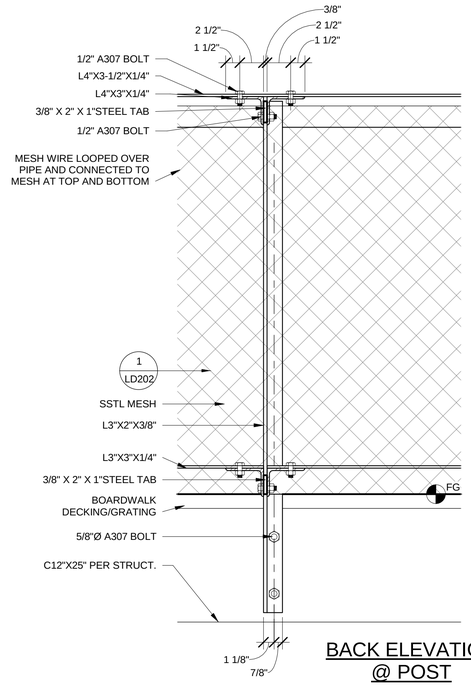

BACK ELEVATION
@ POST

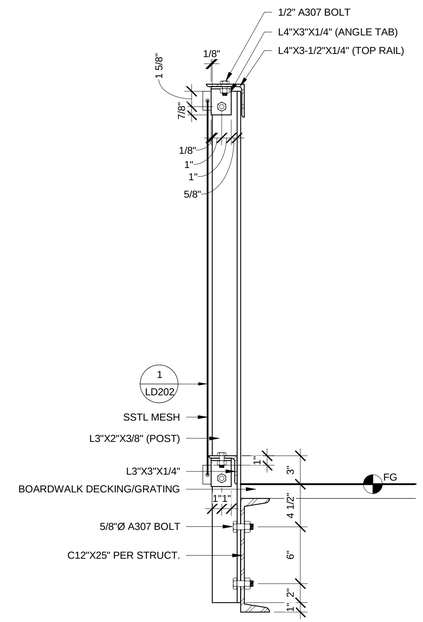

SECTION

1 BOARDWALK RAILING
1 1/2" = 1'-0"

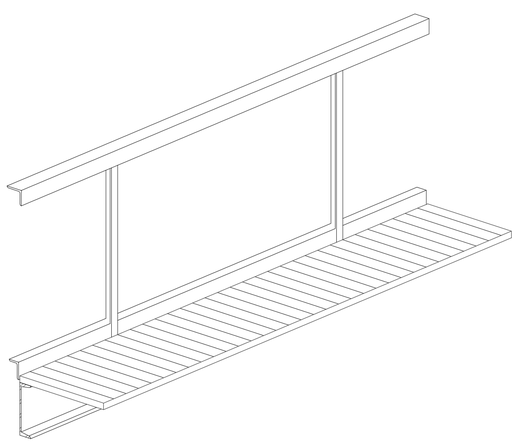

3 BOARDWALK RAILING FRONT (FOR REFERENCE ONLY)

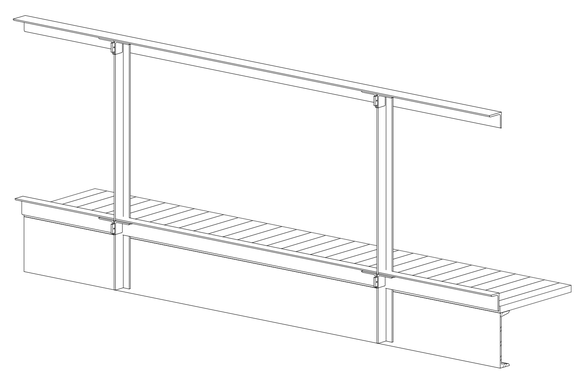

2 BOARDWALK RAILING BACK (FOR REFERENCE ONLY)

SSTL MESH SYSTEM REQUIREMENTS	
Note #	Comments
1	MESH SYSTEM/ASSEMBLY SHALL BE CAPABLE OF WITHSTANDING THE EFFECTS OF GRAVITY LOADS AND CONCENTRATED LOADS OF 200 LBS/FT (0.89 KN) APPLIED HORIZONTALLY ON AN AREA OF 1 SF.
2	MESH SYSTEM ASSEMBLY SHALL COMPLY WITH ALL ADA AND OSHA REGULATIONS AND SHALL BE FABRICATED AND INSTALLED TO COMPLY WITH APPLICABLE CODES AND REGULATIONS.
3	MAXIMUM OPENING IN MESH SYSTEM/ASSEBLY INCLUDING END CONDTIONS SHALL NOT PERMIT THE PASSAGE OF A 4" SPHERE ANYWHERE WITHIN THE SYSTEM OR BETWEEN THE SYSTEM AND THE POST/RAIL RAILING.
4	DESIGN TEMPERATURE RANGE: -30F TO 120F.
5	MESH SYSTEM ASSEMBLY SHALL E FABRICATED AND INSTALLED TO ACCOMODATE EXPANSION AND CONTRACTION OF METAL COMPONENTS WITHOUT CAUSING UNDUE STRESS, BUCKLING, OPENING OF JOINTS, AND DISTORTION.
6	TIGHTENING OF SYSTEM AND CABLES SHALL NOT RESULT IN EXCESSIVE DEFLECTION OR DISTORTION CAUSING SYSTEM TO NOT COMPLY WITH APPLICABLE CODES.
7	EXPOSED COMPONENTS SHALL BE OF THE SAME MATERIALS, COLOR AND FINISH AS MATERIAL TO WHICH APPLIED. ALL EXPOSED COMPONENTS SHALL HAVE THE SAME INHERENT TEXTURE AND COLOR.
8	COMPONENTS OF SYSTEM INCLUDE: END STOPS, CABLE/WIRE ROPE, TURNBUCKLES, MESH, THREADED ENDS, AND MESH WIRE.
9	ALL COMPONENTS SHALL BE STAINLESS STEEL.
10	ALL WIRE ROPE/CABLE SHALL BE PLUMB.
11	WIRE ROPE/CABLE SHALL BE 6X7 3/8" DIA. (10MM)
12	MESH SHALL BE WEB NET W/ INTEGRAL CLAMPS AT INTERSECTIONS, 5/64" DIA (2 MM) WIRE, 2-3/4" VERT. O.C. SPA. INTERSECTIONS X 4-57/64" HORIZ. O.C. SPA. INTERSECTIONS.
13	MESH SHALL BE MAXIMUM 40'-0" LENGTH BETWEEN ENDS AND WIRE ROPE/CABLES.
14	THE END OF EACH WIRE ROPE SHALL BE TIGHTENED TO 1000 LBS TENSION.

GENERAL RAILING NOTES & REQUIREMENTS	
Note #	Comments
1	RAILING MECHANICAL ATTACHMENTS SHALL UTILIZE LOCKING NUTS.
2	PROVIDE (6) SCULPTURE ART CONNECTIONS BRACKETS (REFER TO STRUCTURAL DETAIL) ARTWORK IS SEPARATE PROJECT - NOT INCLUDED, BUT CONNECTION BRACKETS ARE TO BE INCLUDED IN THIS PROJECT. REFER TO BOARDWALK SITE PLAN FOR LOCATIONS. CONFIRM LOCATIONS W/ LANDSCAPE ARCHITECT.
3	CONTRACTOR SHALL PROVIDE SHOP DRAWINGS FOR METAL RAILINGS. SHOP DRAWINGS SHALL INCLUDE ALL MATERIALS, FINISHES, AND FASTENERS, SPLICESLOCATIONS OF ART CONNECTION BRACKETS AND CUTOUTS TO ACCOMODATE ARTWORK.
4	ALL POSTS, AND POST TYPES, SHALL BE PLUMB.
5	POSTS SHALL BE LOCATED PER PLANS.
6	TOP RAILS AND PIPES SHALL BE PARALLEL TO BOARDWALK FINISH GRADE.
7	ALL MEMBERS, FASTENERS AND ATTACHMENT HARDWARE SHALL BE GALVANIZED STEEL UNLESS NOTED OTHERWISE.
8	SPLICES/JOINTS FOR TOP RAIL SHALL OCCUR CENTERED ON A POST SUCH THAT EACH END IS BOLTED TO ANGLE TABS.
9	FINISHED RAILING SHALL NOT PERMIT THE PASSAGE OF A 4" SPHERE.
10	FINISHED GUARDRAIL SHALL BE 3'-6 1/4" HEIGHT.
11	SPLICES FOR TOP AND BOTTOM PIPES SHALL BE SPACED AT MINIMUM 10' O.C.
12	PRECUT METAL PANELS @ BOARDWALK SHALL BE POWDER COATED PER MANUFACTURER'S RECOMMENDATIONS. COLOR TO BE SELECTED FROM VENDORS STANDARD COLOR CHART. PRECUT METAL PANELS AT OVERLOOK GUARDRAIL SHALL BE CORTEN.
13	PRECUT METAL PANEL LENGTH SHALL BE FIELD MEASURED.
14	WHERE ENDPOST #2 OCCURS ANOTHER ENDPOST #2 SHALL BE LOCATED ADJACENT SUCH THAT THE GAP BETWEEN THE POSTS IS 1" MIN. TO 3" MAX. THE GAP SHALL NOT PERMIT THE PASSAGE OF A 4" SPHERE.
15	WHERE BEGINNING POST OCCURS ANOTHER BEGINNING POST SHALL BE LOCATED ADJACENT EXCEPT FOR @ EA. END OF THE BOARDWALK. THE BEGINNING POSTS SHALL BE LOCATED SUCH THAT THE GAP BETWEEN THE POSTS IS 1" MIN. TO 3" MAX. THE GAP SHALL NOT PERMIT THE PASSAGE OF A 4" SPHERE.
16	SCULPTURE ART CONNECTION BRACKETS SHALL BE INSTALLED PLUMB.

PARTNERSHIP berger
1927 Post Alley, Ste. 2
Seattle, WA 98101
206 325 6977
bergerpartnership.com

Totem Lake Park Phase 1
City of Kirkland
12031 Totem Lake Way, Kirkland, WA 98034

STATE OF WASHINGTON
ANDY MITTON
NO. 882 EXP. 6/30/2020
LANDSCAPE ARCHITECT

SET TYPE:
Bid Set

SET ISSUE DATE:
09/13/2019

REVISIONS:

Δ	DESCRIPTION	DATE

DRAWN/CHECKED:
MM / AM

SHEET NAME:
METAL GUARDRAIL DETAILS

SHEET NUMBER:
LD201

Berger Partnership Project Number: 20154875.02
Plotted: 11/25/2019 1:38:11 PM
Filename: G:\Everyone\Christine Abbott\Revit Local\Totem Lake Park-PH1_christinea@bergerpartnership.com.rvt

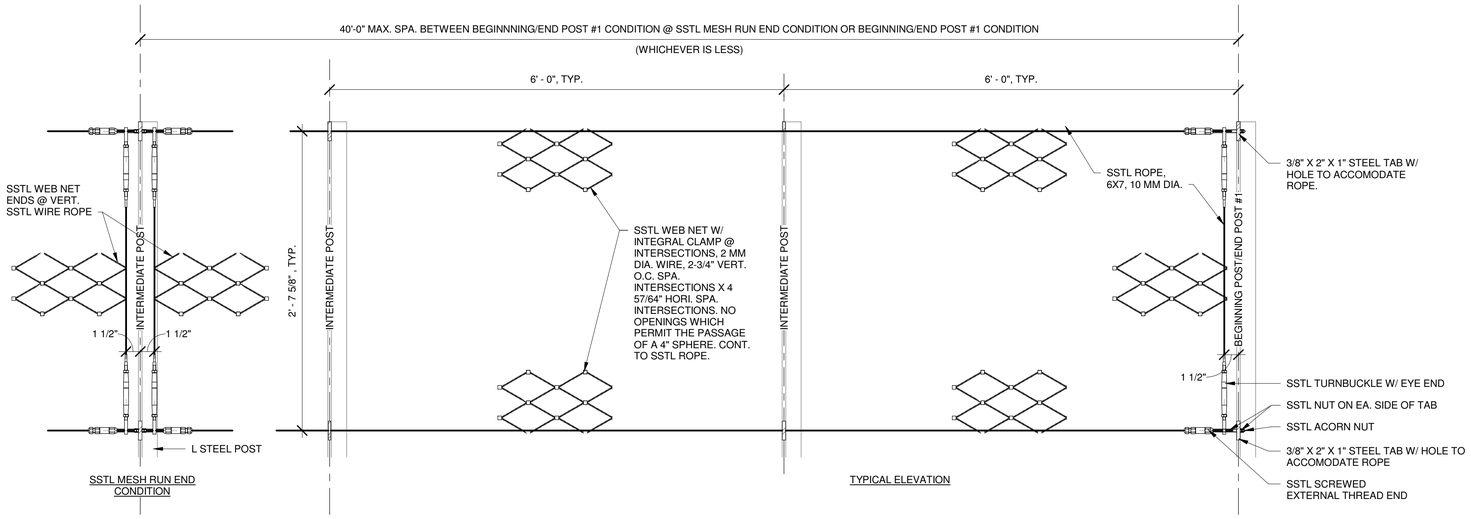

1 BOARDWALK RAILING - WEB NET MESH
1 1/2" = 1'-0"

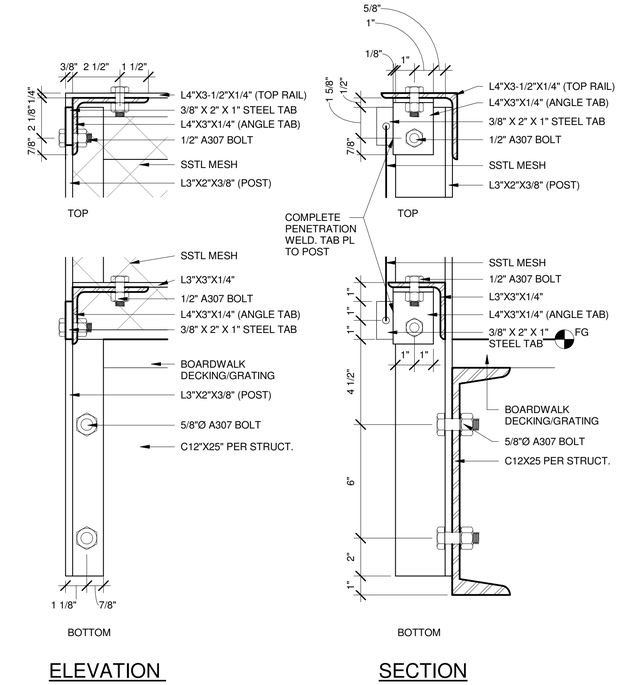

2 BOARDWALK RAILING @ BEGINNING POST
3" = 1'-0"

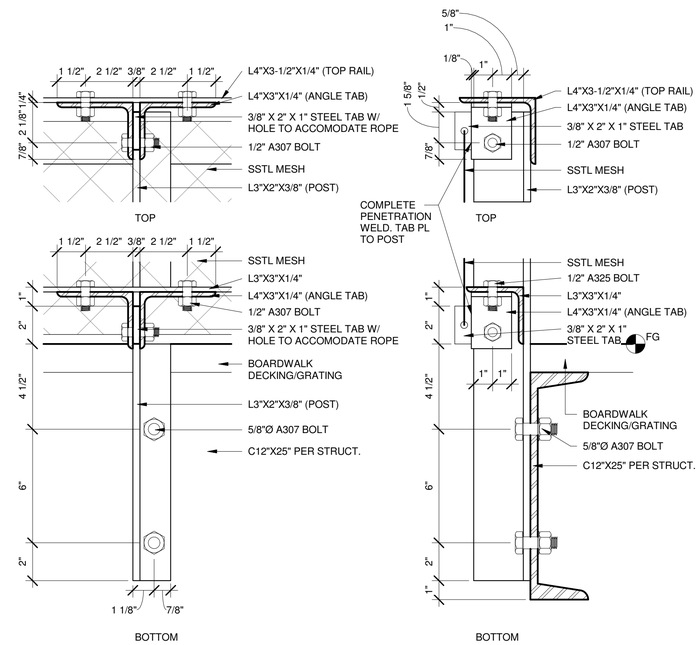

3 BOARDWALK RAILING @ INTERMEDIATE POST
3" = 1'-0"

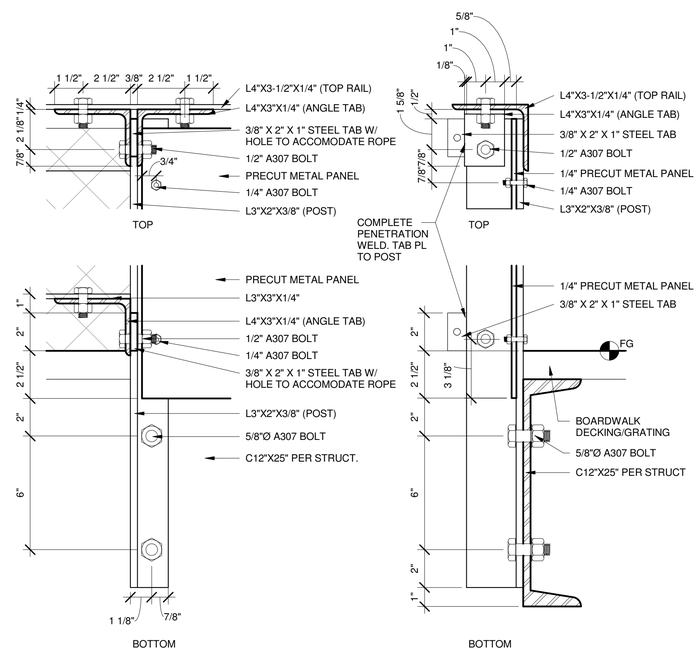

4 BOARDWALK RAILING @ END POST #1
3" = 1'-0"

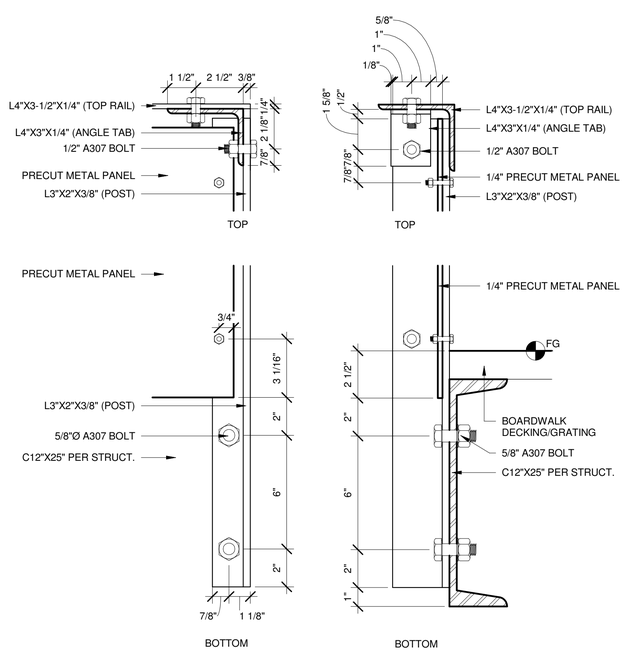

5 BOARDWALK RAILING @ END POST #2
3" = 1'-0"

PARTNERSHIP berger
1927 Post Alley, Ste. 2
Seattle, WA 98101
206 325 6977
bergerpartnership.com

Totem Lake Park Phase 1
City of Kirkland
12031 Totem Lake Way, Kirkland, WA 98034

STATE OF WASHINGTON ANDY MITTON NO. 882 EXP. 6/30/2020 LANDSCAPE ARCHITECT

SET TYPE:
Bid Set

SET ISSUE DATE:
09/13/2019

REVISIONS:

Δ	DESCRIPTION	DATE

DRAWN/CHECKED:
Author / Checker

SHEET NAME:
METAL GUARDRAIL DETAILS

SHEET NUMBER:
LD202

Berger Partnership Project Number: 20154875.02
Plotted: 9/12/2019 11:06:00 AM
Filename: G:\Everyone\Christine Abbott\Revit Local\Totem Lake Park-PH1_christinea@bergerpartnership.com.rvt

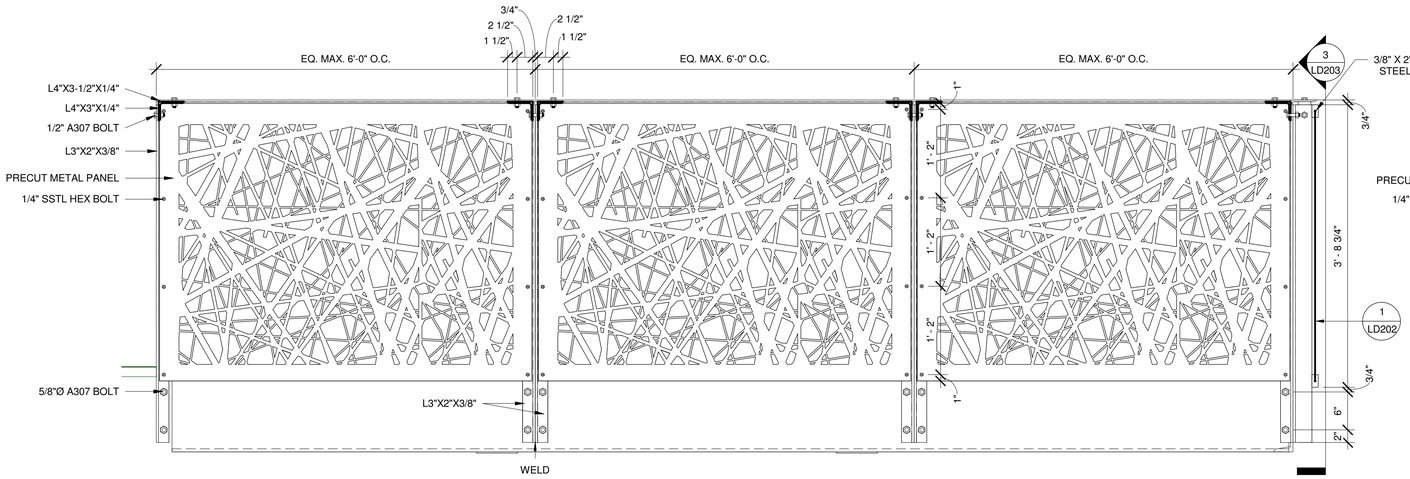

1 GUARDRAIL ELEVATION 3
1" = 1'-0"

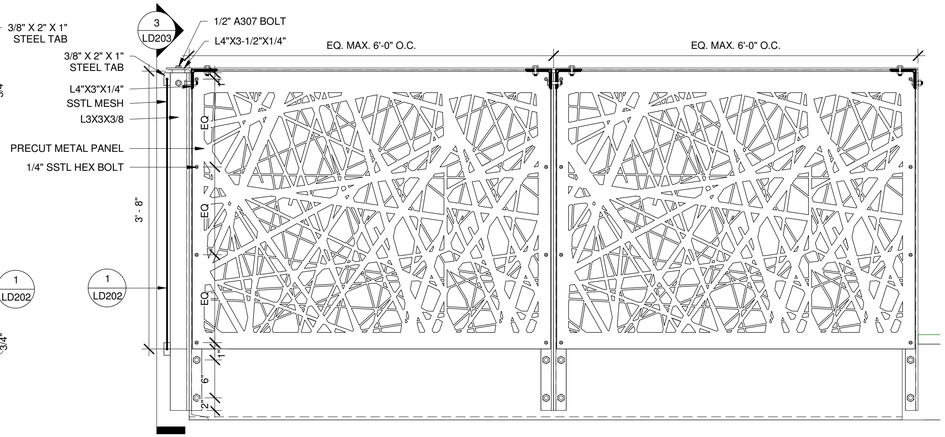

2 GUARDRAIL ELEVATION 1
1" = 1'-0"

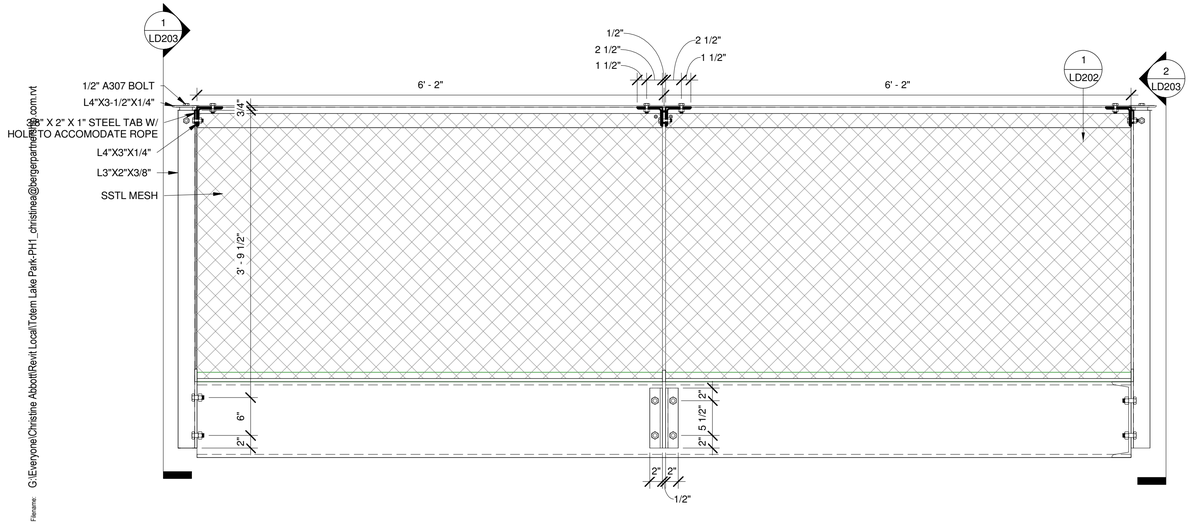

3 GUARDRAIL ELEVATION 2
1" = 1'-0"

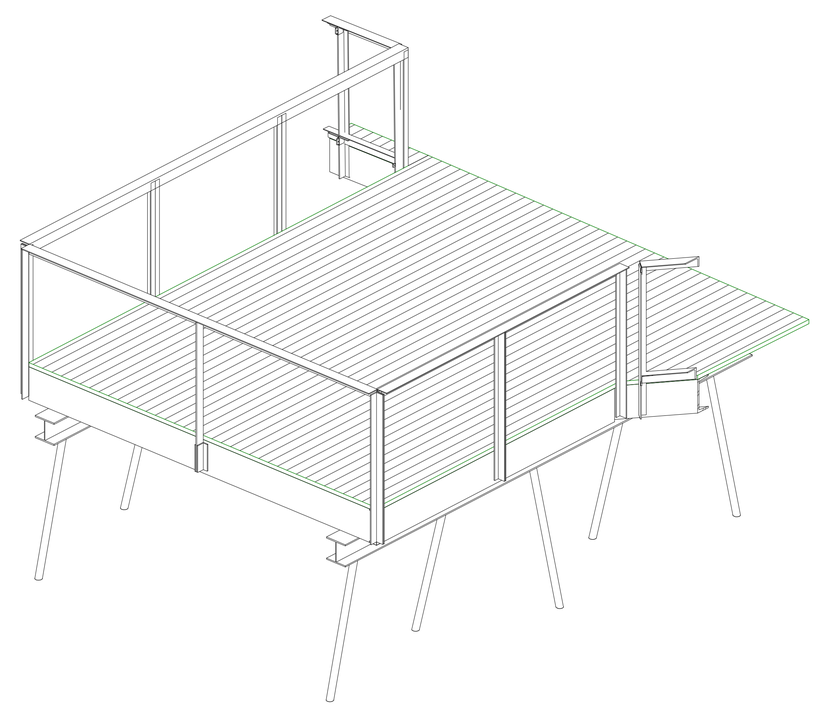

4 OVERLOOK RAILING (FOR REFERENCE ONLY)

PARTNERSHIP berger
1927 Post Alley, Ste. 2
Seattle, WA 98101
206 325 6977
bergerpartnership.com

Totem Lake Park Phase 1

City of Kirkland

12031 Totem Lake Way, Kirkland, WA 98034

STATE OF WASHINGTON
ANDY MITTON
NO. 882 EXP. 6/30/2020
LANDSCAPE ARCHITECT

SET TYPE:
Bid Set

SET ISSUE DATE:
09/13/2019

REVISIONS:

Δ	DESCRIPTION	DATE

DRAWN/CHECKED:
Author / Checker

SHEET NAME:
METAL GUARDRAIL @ BOARDWALK OVERLOOK

LD203

Filename: G:\Everyone\Christine Abbott\Revit Local\Totem Lake Park-PH1_christinea@bergerpartnership.com.rvt
Plotted: 9/12/2019 11:06:04 AM
Berger Partnership Project Number: 20154875.02

General Structural Notes

THE FOLLOWING APPLY UNLESS SHOWN OTHERWISE ON THE DRAWINGS

CRITERIA

1. ALL MATERIALS, WORKMANSHIP, DESIGN, AND CONSTRUCTION SHALL CONFORM TO THE DRAWINGS, SPECIFICATIONS, AND THE INTERNATIONAL BUILDING CODE (2015 EDITION).

2. DESIGN LOADING CRITERIA:
   HANDRAILS AND GUARDS
   GUARDRAILS/BALCONY RAILS . . . . . 50 PLF
   GUARDRAILS/BALCONY RAILS CONCENTRATED LOAD . . . . . 200 LBS
   BOARDWALK
   FLOOR LIVE LOAD (WALKWAY) . . . . . .60 PSF
   DEFLECTION CRITERIA
   LIVE LOAD DEFLECTION L/360
   TOTAL LOAD DEFLECTION L/240
   ENVIRONMENTAL LOADS
   SNOW . . . . . 25PSF OVER BOARDWALK SURFACE
   WIND . . . . . GCpi=0.18, 110 MPH, RISK CATEGORY II, EXPOSURE "B"
   EARTHQUAKE . ANALYSIS PROCEDURE: EQUIVALENT LATERAL FORCE PROCEDURE
   LATERAL SYSTEM (RAMPED BOARDWALK): ORDINARY STEEL
   CONCENTRICALLY BRACED FRAMES, R=3.25
   SITE CLASS=E, Ss=1.25, Sds=0.75, S1=0.48, SD1=0.77,
   Cs=0.602, SDC E, Ie=1.0

3. STRUCTURAL DRAWINGS SHALL BE USED IN CONJUNCTION WITH ARCHITECTURAL DRAWINGS FOR BIDDING AND CONSTRUCTION. ARCHITECTURAL DRAWINGS ARE THE PRIME CONTRACT DRAWINGS. ANY DISCREPANCIES FOUND AMONG THE DRAWINGS, THE SPECIFICATION, THESE GENERAL NOTES AND THE SITE CONDITIONS SHALL BE REPORTED TO THE ARCHITECT, WHO SHALL CORRECT SUCH DISCREPANCY IN WRITING. ANY WORK DONE BY THE GENERAL CONTRACTOR AFTER DISCOVERY OF SUCH DISCREPANCY SHALL BE DONE AT THE GENERAL CONTRACTOR'S RISK.

4. PRIMARY STRUCTURAL ELEMENTS NOT DIMENSIONED ON THE STRUCTURAL PLANS AND DETAILS SHALL BE LOCATED BY THE ARCHITECTURAL PLANS AND DETAILS. VERTICAL DIMENSION CONTROL IS DEFINED BY THE ARCHITECTURAL SECTIONS AND PLANS. DETAILING AND SHOP DRAWING PRODUCTION FOR STRUCTURAL ELEMENTS WILL REQUIRE DIMENSIONAL INFORMATION CONTAINED IN BOTH ARCHITECTURAL AND STRUCTURAL DRAWINGS.

5. CONTRACTOR SHALL BE RESPONSIBLE FOR ALL SAFETY PRECAUTIONS AND THE METHODS, TECHNIQUES, SEQUENCES OR PROCEDURES REQUIRED TO PERFORM THE CONTRACTORS WORK. THE STRUCTURAL ENGINEER HAS NO OVERALL SUPERVISORY AUTHORITY OR ACTUAL AND/OR DIRECT RESPONSIBILITY FOR THE SPECIFIC WORKING CONDITIONS AT THE SITE AND/OR FOR ANY HAZARDS RESULTING FROM THE ACTIONS OF ANY TRADE CONTRACTOR. THE STRUCTURAL ENGINEER HAS NO DUTY TO INSPECT, SUPERVISE, NOTE, CORRECT, OR REPORT ANY HEALTH OR SAFETY DEFICIENCIES TO THE OWNER, CONTRACTORS, OR OTHER ENTITIES OR PERSONS AT THE PROJECT SITE.

6. CONTRACTOR SHALL PROVIDE TEMPORARY BRACING FOR THE STRUCTURE AND STRUCTURAL COMPONENTS UNTIL ALL FINAL CONNECTIONS HAVE BEEN COMPLETED IN ACCORDANCE WITH THE PLANS. CONFORM TO ASCE 37-14 "DESIGN LOADS ON STRUCTURES DURING CONSTRUCTION".

7. CONTRACTOR-INITIATED CHANGES SHALL BE SUBMITTED IN WRITING TO THE ARCHITECT AND STRUCTURAL ENGINEER FOR APPROVAL PRIOR TO FABRICATION OR CONSTRUCTION. CHANGES SHOWN ON SHOP DRAWINGS ONLY WILL NOT SATISFY THIS REQUIREMENT.

8. DRAWINGS INDICATE GENERAL AND TYPICAL DETAILS OF CONSTRUCTION. WHERE CONDITIONS ARE NOT SPECIFICALLY INDICATED BUT ARE OF SIMILAR CHARACTER TO DETAILS SHOWN, SIMILAR DETAILS OF CONSTRUCTION SHALL BE USED, SUBJECT TO REVIEW AND APPROVAL BY THE ARCHITECT AND THE STRUCTURAL ENGINEER. ALL TYPICAL NOTES AND DETAILS SHOWN ON DRAWINGS SHALL APPLY, UNLESS NOTED OTHERWISE. TYPICAL DETAILS MAY NOT NECESSARILY BE INDICATED ON THE PLANS BUT SHALL STILL APPLY AS SHOWN OR DESCRIBED IN THE DETAILS. WHERE TYPICAL DETAILS ARE NOTED ON THE PLANS, THE SPECIFIED TYPICAL DETAIL SHALL BE USED. WHERE NO TYPICAL DETAIL IS NOTED, IT SHALL BE THE CONTRACTOR'S RESPONSIBILITY TO CHOOSE THE APPROPRIATE TYPICAL DETAIL FROM THOSE PROVIDED OR REQUEST ADDITIONAL INFORMATION. THE CONTRACTOR SHALL SUBMIT ALL PROPOSED ALTERNATE TYPICAL DETAILS TO THOSE PROVIDED WITH RELATED CALCULATIONS TO THE ENGINEER FOR APPROVAL PRIOR TO SHOP DRAWING PRODUCTION AND FIELD USE.

9. ALL STRUCTURAL SYSTEMS, WHICH ARE TO BE COMPOSED OF COMPONENTS TO BE FIELD ERECTED, SHALL BE SUPERVISED BY THE SUPPLIER DURING MANUFACTURING, DELIVERY, HANDLING, STORAGE AND ERECTION IN ACCORDANCE WITH INSTRUCTIONS PREPARED BY THE SUPPLIER.

10. SHOP DRAWINGS FOR THE FOLLOWING ITEMS SHALL BE SUBMITTED TO THE ARCHITECT AND STRUCTURAL ENGINEER FOR REVIEW PRIOR TO FABRICATION OF THESE ITEMS.

    STRUCTURAL STEEL

    CONTRACTOR SHALL SUBMIT WALL ELEVATION DRAWINGS OF AT LEAST 1/8" = 1'-0" SCALE INDICATING LOCATIONS OF CONNECTION EMBEDMENT'S AND WALL OPENINGS FOR REVIEW PRIOR TO CONSTRUCTION. CONTRACTOR SHALL COORDINATE WALL ELEVATION DRAWINGS WITH REINFORCEMENT SHOP DRAWINGS.

    APPROVED SETS OF ALL SHOP DRAWINGS SHALL ALSO BE SUBMITTED TO THE BUILDING DEPARTMENT.

11. SHOP DRAWING REVIEW: DIMENSIONS AND QUANTITIES ARE NOT REVIEWED BY THE ENGINEER OF RECORD, THEREFORE MUST BE VERIFIED BY THE CONTRACTOR. CONTRACTOR SHALL REVIEW AND STAMP DRAWINGS PRIOR TO REVIEW BY ENGINEER OF RECORD. CONTRACTOR SHALL REVIEW DRAWINGS FOR CONFORMANCE WITH THE MEANS, METHODS, TECHNIQUES, SEQUENCES AND OPERATIONS OF CONSTRUCTION, AND ALL SAFETY PRECAUTIONS AND PROGRAMS INCIDENTAL THERETO. SUBMITTALS SHALL INCLUDE A REPRODUCIBLE AND ONE COPY; REPRODUCIBLE WILL BE MARKED AND RETURNED WITHIN TWO WEEKS OF RECEIPT WITH A NOTATION INDICATING THAT THE SUBMITTAL HAS BEEN FOUND TO BE IN GENERAL CONFORMANCE WITH THE DESIGN OF THE BUILDING. THE SUBMITTED ITEMS SHALL NOT BE INSTALLED UNTIL THEY HAVE BEEN APPROVED BY THE BUILDING OFFICIAL.

    SHOP DRAWING SUBMITTALS PROCESSED BY THE ENGINEER ARE NOT CHANGE ORDERS. THE PURPOSE OF SHOP DRAWING SUBMITTALS BY THE CONTRACTOR IS TO DEMONSTRATE TO THE ENGINEER THAT THE CONTRACTOR UNDERSTANDS THE DESIGN CONCEPT, BY INDICATING WHICH MATERIAL IS INTENDED TO BE FURNISHED AND INSTALLED AND BY DETAILING THE INTENDED FABRICATION AND INSTALLATION METHODS. IF DEVIATIONS, DISCREPANCIES, OR CONFLICTS BETWEEN SHOP DRAWING SUBMITTALS AND THE CONTRACT DOCUMENTS ARE DISCOVERED EITHER PRIOR TO OR AFTER SHOP DRAWING SUBMITTALS ARE PROCESSED BY THE ENGINEER, THE DESIGN DRAWINGS AND SPECIFICATIONS SHALL CONTROL AND SHALL BE FOLLOWED.

QUALITY ASSURANCE

12. SPECIAL INSPECTION SHALL BE PROVIDED IN ACCORDANCE WITH THE PROJECT SPECIFICATIONS AND SECTIONS 110 AND 1705 OF THE INTERNATIONAL BUILDING CODE BY A QUALIFIED TESTING AGENCY DESIGNATED BY THE ARCHITECT, AND RETAINED BY THE BUILDING OWNER. THE ARCHITECT, STRUCTURAL ENGINEER, AND BUILDING DEPARTMENT SHALL BE FURNISHED WITH COPIES OF ALL INSPECTION AND TEST RESULTS. SPECIAL INSPECTION OF THE FOLLOWING TYPES OF CONSTRUCTION IS REQUIRED UNLESS NOTED OTHERWISE.

STRUCTURAL STEEL FABRICATION AND ERECTION	SEE SHEET SS003
DRIVEN DEEP FOUNDATION	SEE SHEET SS003
CONCRETE CONSTRUCTION	SEE SHEET SS003

    PERIODIC INSPECTION: INSPECTION SHALL BE PERFORMED AT INTERVALS NECESSARY TO CONFIRM THAT WORK REQUIRING SPECIAL INSPECTION IS IN COMPLIANCE WITH REQUIREMENTS.
    CONTINUOUS INSPECTION: INSPECTOR SHALL BE ONSITE AND OBSERVE THE WORK REQUIRING INSPECTION AT ALL TIMES THAT WORK IS PERFORMED.

GEOTECHNICAL

13. FOUNDATION NOTES: SUBGRADE PREPARATION INCLUDING DRAINAGE, EXCAVATION, COMPACTION, AND FILLING REQUIREMENTS, SHALL CONFORM STRICTLY WITH RECOMMENDATIONS GIVEN IN THE SOILS REPORT OR AS DIRECTED BY THE SOILS ENGINEER.

    PILE CAPACITY 2" DIAMETER SCHEDULE 80 . . . . . 4,000 LBS
    PILE CAPACITY 3" DIAMETER SCHEDULE 40 . . . . . .10,000 LBS
    PILE CAPACITY 4" DIAMETER SCHEDULE 40 . . . . . 20,000 LBS
    PILE CAPACITY 6" DIAMETER SCHEDULE 60 . . . . . 30,000 LBS

    SOILS REPORT REFERENCE: PROJECT NO. 170126E001, SEPTEMBER 28TH, 2017, TOTEM LAKE PARK

14. PIPE PILES SHOWN ON THE PLANS SHALL BE EITHER 2" DIAMETER (SCHEDULE 80), 3" DIAMETER (SCHEDULE 40) OR 4" DIAMETER (SCHEDULE 40). ALL PIPE PILES SHALL BE GALVANIZED PER THE GEOTECHNICAL REPORT. THE MAXIMUM CAPACITY OF THE PILE SHALL BE 4 KIPS FOR A 2" DIAMETER PILE AND 20 KIPS FOR A 4" DIAMETER PILE. ALL PILES SHALL BE DRIVEN TO REFUSAL IN ACCORDANCE WITH THE GEOTECHNICAL REPORT. THE MAXIMUM PILE ECCENTRICITY SHALL BE 2 INCHES. CONTINUOUS SPECIAL INSPECTION IS REQUIRED FOR DRIVEN DEEP FOUNDATION ELEMENTS. SEE PLANS FOR OTHER SIZES, SPACING, AND CRITERIA.

CONCRETE

15. CONCRETE SHALL BE MIXED, PROPORTIONED, CONVEYED AND PLACED IN ACCORDANCE WITH ACI 301, INCLUDING TESTING PROCEDURES. CONCRETE SHALL ATTAIN A 28-DAY STRENGTH OF f'c = 4,000 PSI AND MIX SHALL CONTAIN NOT LESS THAN 5-1/2 SACKS OF CEMENT PER CUBIC YARD AND SHALL BE PROPORTIONED TO PRODUCE A SLUMP OF 5" OR LESS. REQUIRED CONCRETE STRENGTH IS BASED ON THE DURABILITY REQUIREMENTS OF SECTION 1904 OF THE IBC.

16. ALL CONCRETE WITH SURFACES EXPOSED TO WEATHER OR STANDING WATER SHALL BE AIR-ENTRAINED WITH AN AIR-ENTRAINING AGENT CONFORMING TO ASTM C260, C494, AND C618. TOTAL AIR CONTENT FOR FROST-RESISTANT CONCRETE SHALL BE IN ACCORDANCE WITH ACI 318-14, TABLE 19.3.2.1 MODERATE EXPOSURE, F1.

17. REINFORCING STEEL SHALL CONFORM TO ASTM A615 (INCLUDING SUPPLEMENT S1), GRADE 60, FY = 60,000 PSI.

18. DETAILING OF REINFORCING STEEL (INCLUDING HOOKS AND BENDS) SHALL BE IN ACCORDANCE WITH ACI 315-99 AND 318-14. LAP ALL CONTINUOUS REINFORCEMENT #5 AND SMALLER 40 BAR DIAMETERS OR 2'-0" MINIMUM. PROVIDE CORNER BARS AT ALL WALL AND FOOTING INTERSECTIONS. LAP CORNER BARS #5 AND SMALLER 40 BAR DIAMETERS OR 2'-0" MINIMUM. LAPS OF LARGER BARS SHALL BE MADE IN ACCORDANCE WITH ACI 318-14, CLASS B. LAP ADJACENT MATS OF WELDED WIRE FABRIC A MINIMUM OF 8" AT SIDES AND ENDS.

    NO BARS PARTIALLY EMBEDDED IN HARDENED CONCRETE SHALL BE FIELD BENT UNLESS SPECIFICALLY SO DETAILED OR APPROVED BY THE STRUCTURAL ENGINEER.

19. CONCRETE PROTECTION (COVER) FOR REINFORCING STEEL SHALL BE AS FOLLOWS:

    FOOTINGS AND OTHER UNFORMED SURFACES CAST AGAINST AND PERMANENTLY EXPOSED TO EARTH . . . . . 3"
    FORMED SURFACES EXPOSED TO EARTH OR WEATHER (#5 BARS OR SMALLER). . 1-1/2"
    COLUMN TIES OR SPIRALS AND BEAM STIRRUPS . . . . . 1-1/2"

20. CAST-IN-PLACE CONCRETE: SEE ARCHITECTURAL DRAWINGS FOR EXACT LOCATIONS AND DIMENSIONS OF DOOR AND WINDOW OPENINGS IN ALL CONCRETE WALLS. SEE MECHANICAL DRAWINGS FOR SIZE AND LOCATION OF MISCELLANEOUS MECHANICAL OPENINGS THROUGH CONCRETE WALLS. SEE ARCHITECTURAL DRAWINGS FOR ALL GROOVES, NOTCHES, CHAMFERS, FEATURE STRIPS, COLOR, TEXTURE, AND OTHER FINISH DETAILS AT ALL EXPOSED CONCRETE SURFACES, BOTH CAST-IN-PLACE AND PRECAST.

21. NON-SHRINK GROUT SHALL BE FURNISHED BY AN APPROVED MANUFACTURER AND SHALL BE MIXED AND PLACED IN STRICT ACCORDANCE WITH THE MANUFACTURER'S PUBLISHED RECOMMENDATIONS. GROUT STRENGTH SHALL BE AT LEAST EQUAL TO THE MATERIAL ON WHICH IT IS PLACED (4000 PSI MINIMUM).

ANCHORAGE

22. EXPANSION BOLTS INTO CONCRETE SHALL BE HOT DIPPED GALVANIZED "STRONG-BOLT 2" WEDGE ANCHORS AS MANUFACTURED BY THE SIMPSON STRONG TIE COMPANY AND INSTALLED IN STRICT CONFORMANCE TO ICC-ES REPORT NUMBER ESR-3037, INCLUDING MINIMUM EMBEDMENT REQUIREMENTS. PERIODIC SPECIAL INSPECTION IS REQUIRED TO VERIFY ANCHOR TYPE, ANCHOR DIMENSIONS, ANCHOR LOCATION, TIGHTENING TORQUE, HOLE DIMENSIONS, ANCHOR EMBEDMENT, AND ADHERENCE TO THE INSTALLATION INSTRUCTIONS.

23. EPOXY-GROUTED ITEMS (THREADED RODS OR REINFORCING BAR) SPECIFIED ON THE DRAWINGS SHALL BE INSTALLED USING "SET-XP" HIGH STRENGTH EPOXY AS MANUFACTURED BY THE SIMPSON STRONG, TIE COMPANY. INSTALL IN STRICT ACCORDANCE WITH ICC-ES REPORT NO. ESR-2508. MINIMUM BASE MATERIAL TEMPERATURE IS 50 DEGREES, F. RODS SHALL BE ASTM GALVANIZED A-36 UNLESS OTHERWISE NOTED. PERIODIC SPECIAL INSPECTION OF INSTALLATION IS REQUIRED TO VERIFY ANCHOR OR EMBEDDED BAR TYPE AND DIMENSIONS, LOCATION, ADHESIVE IDENTIFICATION AND EXPIRATION, HOLE DIMENSIONS, HOLE CLEANING PROCEDURE, ANCHOR EMBEDMENT, AND ADHERENCE TO THE INSTALLATION INSTRUCTIONS. CONTINUOUS SPECIAL INSPECTION IS REQUIRED FOR HORIZONTAL AND OVERHEAD INSTALLATIONS.

STEEL

24. STRUCTURAL STEEL DESIGN, FABRICATION, AND ERECTION SHALL BE BASED ON:

    A. AISC 360 AND SECTION 2205.2 OF THE INTERNATIONAL BUILDING CODE.
    B. APRIL 14, 2010 AISC CODE OF STANDARD PRACTICE FOR STEEL BUILDINGS AND BRIDGES AMENDED AS FOLLOWS: AS NOTED IN THE CONTRACT DOCUMENTS, BY THE DELETION OF PARAGRAPH 4.4.1, AND REVISE REFERENCE FROM "STRUCTURAL DESIGN DRAWINGS" TO "CONTRACT DOCUMENTS" IN PARAGRAPH 3.1.
    C. SPECIFICATION FOR STRUCTURAL JOINTS USING ASTM A325 OR A490 BOLTS.

25. STRUCTURAL STEEL SHALL CONFORM TO THE FOLLOWING REQUIREMENTS:

TYPE OF MEMBER	ASTM SPECIFICATION	FY
A. WIDE FLANGE SHAPES	A992	50 KSI
B. OTHER SHAPES, PLATES, AND RODS	A36	36 KSI
C. PIPE COLUMNS	A53 (E OR S, GR.B)	35 KSI
D. STRUCTURAL TUBING	A500 (GR.B) OR ASTM A1085	
-SQUARE OR RECTANGULAR		46 KSI
-ROUND		42 KSI
E. CONNECTION BOLTS (3/4" ROUND, UNLESS SHOWN OTHERWISE)	A325-N	

26. ARCHITECTURALLY EXPOSED STRUCTURAL STEEL SHALL CONFORM TO SECTION 10 OF THE AISC CODE OF STANDARD PRACTICE FOR STEEL BUILDINGS AND BRIDGES.

27. ALL STEEL AND BOLTED CONNECTIONS EXPOSED TO THE WEATHER OR IN CONTACT WITH GROUND SHALL BE CORROSION PROTECTED BY GALVANIZATION (HOT DIPPED GALVANIZED), UNLESS OTHERWISE NOTED.

28. ALL A-325N CONNECTION BOLTS NEED ONLY BE TIGHTENED TO A SNUG TIGHT CONDITION, DEFINED AS THE TIGHTNESS THAT EXISTS WHEN ALL PLIES IN A JOINT ARE IN FIRM CONTACT. THIS MAY BE ATTAINED BY A FEW IMPACTS OF AN IMPACT WRENCH OR THE FULL EFFORT OF AN IRONWORKER USING AN ORDINARY SPUD WRENCH.

29. ALL CAST-IN-PLACE ANCHORS EMBEDDED IN CONCRETE SHALL BE A307 HEADED BOLTS OR A36 THREADED ROD WITH AN ASTM 563 HEAVY HEX NUT TACK WELDED ON THE EMBEDDED END.

30. ALL WELDING SHALL BE IN CONFORMANCE WITH AISC AND AWS STANDARDS AND SHALL BE PERFORMED BY WABO CERTIFIED WELDERS USING E70XX ELECTRODES. ONLY PREQUALIFIED WELDS (AS DEFINED BY AWS) SHALL BE USED. ALL COMPLETE JOINT PENETRATION GROOVE WELDS SHALL BE MADE WITH A FILLER MATERIAL THAT HAS A MINIMUM CVN TOUGHNESS OF 20 FT-LBS AT -20 DEGREES F AND 40 FT - LBS AT 70 DEGREES F, AS DETERMINED BY AWS CLASSIFICATION OR MANUFACTURER CERTIFICATION.

PARTNERSHIP berger
1927 Post Alley, Ste. 2
Seattle, WA 98101
206.325.6877
bergerpartnership.com

SSF STRUCTURAL ENGINEERING
2124 Third Avenue - Suite 100 - Seattle, WA 98121
p: 206.443.6212 ssfengineers.com
934 Broadway - Tacoma, WA 98402
p: 253.284.9470 ssfengineers.com

Totem Lake Park Phase 1
City of Kirkland
12031 Totem Lake Way, Kirkland, WA 98034

SET TYPE:
Bid Set

SET ISSUE DATE:
9/13/2019

REVISIONS:

DRAWN/CHECKED:
NHD/GFJ

SHEET NAME:
GENERAL STRUCTURAL NOTES

SHEET NUMBER:
SS001

Berger Partnership Project Number: XXXXXXXX.XX Printed: 08.21.2019 9:11 AM By: Nathan Darden Filename: I:\150058604 totem lake park\phase 01\lp-ss001.dwg

General Structural Notes

THE FOLLOWING APPLY UNLESS SHOWN OTHERWISE ON THE DRAWINGS

WOOD

31. FRAMING LUMBER SHALL BE S-DRY, KD, OR MC-19, AND GRADED AND MARKED IN CONFORMANCE WITH WCLIB STANDARD "GRADING RULES FOR WEST COAST LUMBER NO. 17", OR WWPA STANDARD, "WESTERN LUMBER GRADING RULES 2011". FURNISH TO THE FOLLOWING MINIMUM STANDARDS:

JOISTS AND BEAMS	(2X & 3X MEMBERS)	HEM-FIR NO. 2 MINIMUM BASE VALUE, Fb = 850 PSI
	(4X MEMBERS)	DOUGLAS FIR-LARCH NO. 1 MINIMUM BASE VALUE, Fb = 1000 PSI
BEAMS	(INCL. 6X AND LARGER)	DOUGLAS FIR-LARCH NO. 1 MINIMUM BASE VALUE, Fb = 1350 PSI
POSTS	(4X MEMBERS)	DOUGLAS FIR-LARCH NO. 2 MINIMUM BASE VALUE, Fc = 1350 PSI
	(6X AND LARGER)	DOUGLAS FIR-LARCH NO. 1 MINIMUM BASE VALUE, Fc = 1000 PSI
STUDS, PLATES & MISC. FRAMING:		DOUGLAS-FIR-LARCH OR HEM-FIR NO. 2

32. ALL WOOD IN DIRECT CONTACT WITH CONCRETE OR MASONRY SHALL BE PRESSURE-TREATED WITH AN APPROVED PRESERVATIVE OR (2) LAYERS OF ASPHALT IMPREGNATED BUILDING PAPER SHALL BE PROVIDED BETWEEN UNTREATED WOOD AND CONCRETE OR MASONRY.

33. PRESERVATIVE TREATED WOOD SHALL BE TREATED PER AWPA STANDARD U1 TO THE USE CATEGORY EQUAL TO OR HIGHER THAN THE INTENDED APPLICATION. TREATED WOOD FOR ABOVE GROUND USE SHALL BE TREATED TO AWPA UC3B. WOOD IN CONTINUOUS CONTACT WITH FRESH WATER OR SOIL SHALL BE TREATED TO AWPA UC4A. WOOD FOR USE IN PERMANENT FOUNDATIONS SHALL BE TREATED TO AWPA UC4B.

34. WOOD TREATED FOR FIRE RESISTANCE SHALL MEET THE REQUIREMENTS OF ASTM E 84 OR UL 723 AND HAVE A LISTED FLAME SPREAD INDEX OF 25 OR LESS. FIRE RETARDANT TREATED LUMBER AND WOOD STRUCTURAL PANELS SHALL BE LABELED IN ACCORDANCE WITH IBC 2303.2.4. WOOD TREATED FOR FIRE PROTECTION FOR USE IN INTERIOR ABOVE GROUND CONSTRUCTION AND CONTINUOUSLY PROTECTED FROM WEATHER AND OTHER SOURCES OF MOISTURE SHALL BE TREATED TO AWPA UCFA. WOOD TREATED FOR FIRE PROTECTION FOR USE IN EXTERIOR ABOVE GROUND CONSTRUCTION AND SUBJECT TO WETTING OR OTHER SOURCES OF MOISTURE SHALL BE TREATED TO AWPA UCFB.

35. FASTENERS AND TIMBER CONNECTORS USED WITH TREATED WOOD SHALL HAVE CORROSION RESISTANCE AS INDICATED IN THE FOLLOWING TABLE, UNLESS OTHERWISE NOTED.

WOOD TREATMENT	CONDITION	PROTECTION
HAS NO AMMONIA CARRIER	INTERIOR DRY	G90 GALVANIZED
CONTAINS AMMONIA CARRIER	INTERIOR DRY	G185 OR A185 HOT DIPPED OR CONTINUOUS HOT-GALVANIZED PER ASTM A653
CONTAINS AMMONIA CARRIER	INTERIOR WET	TYPE 304 OR 316 STAINLESS
CONTAINS AMMONIA CARRIER	EXTERIOR	TYPE 304 OR 316 STAINLESS
AZCA	ANY	TYPE 304 OR 316 STAINLESS

INTERIOR DRY CONDITIONS SHALL HAVE WOOD MOISTURE CONTENT LESS THAN 19%. WOOD MOISTURE CONTENT IN OTHER CONDITIONS (INTERIOR WET, EXTERIOR WET, AND EXTERIOR DRY) IS EXPECTED TO EXCEED 19%. CONNECTORS AND THEIR FASTENERS SHALL BE THE SAME MATERIAL. COMPLY WITH THE TREATMENT MANUFACTURERS RECOMMENDATIONS FOR PROTECTION OF METAL.

36. TIMBER CONNECTORS CALLED OUT BY LETTERS AND NUMBERS SHALL BE "STRONG-TIE" BY SIMPSON COMPANY, AS SPECIFIED IN THEIR CATALOG NUMBER C-C-2017. EQUIVALENT DEVICES BY OTHER MANUFACTURERS MAY BE SUBSTITUTED, PROVIDED THEY HAVE ICC-ES APPROVAL FOR EQUAL OR GREATER LOAD CAPACITIES. PROVIDE NUMBER AND SIZE OF FASTENERS AS SPECIFIED BY MANUFACTURER FOR MAXIMUM LOAD CARRYING CAPACITY. CONNECTORS SHALL BE INSTALLED IN ACCORDANCE WITH THE MANUFACTURER'S RECOMMENDATIONS.

ALL 2X JOISTS SHALL BE CONNECTED TO FLUSH BEAMS WITH "LUS" SERIES JOIST HANGERS. ALL TJI JOISTS SHALL BE CONNECTED TO FLUSH BEAMS WITH "ITS" SERIES JOIST HANGERS. ALL DOUBLE-JOIST BEAMS SHALL BE CONNECTED TO FLUSH BEAMS WITH "MIT" SERIES JOIST HANGERS.

WHERE CONNECTOR STRAPS CONNECT TWO MEMBERS, PLACE ONE-HALF OF THE NAILS OR BOLTS IN EACH MEMBER.

ALL SHIMS SHALL BE SEASONED AND DRIED AND THE SAME GRADE (MINIMUM)AS MEMBERS CONNECTED.

37. WOOD FASTENERS

A. NAIL SIZES SPECIFIED ON DRAWINGS ARE BASED ON THE FOLLOWING SPECIFICATIONS:

SIZE	LENGTH	DIAMETER
6d	2"	0.113"
8d	2-1/2"	0.131"
10d	3"	0.148"
12d	3-1/4"	0.148"
16d BOX	3-1/2"	0.135"

IF CONTRACTOR PROPOSES THE USE OF ALTERNATE NAILS, THEY SHALL SUBMIT NAIL SPECIFICATIONS TO THE STRUCTURAL ENGINEER (PRIOR TO CONSTRUCTION) FOR REVIEW AND APPROVAL.

NAILS - PLYWOOD (APA RATED SHEATHING) FASTENERS TO FRAMING SHALL BE DRIVEN FLUSH TO FACE OF SHEATHING WITH NO COUNTERSINKING PERMITTED. TOE-NAILS SHALL BE DRIVEN AT AN ANGLE OF 30 DEGREES WITH THE MEMBER AND STARTED 1/3 THE LENGTH OF THE NAIL FROM THE MEMBER END.

B. ALL BOLTS IN WOOD MEMBERS SHALL CONFORM TO ASTM A307. PROVIDE WASHERS UNDER THE HEADS AND NUTS OF ALL BOLTS AND LAG BOLTS BEARING ON WOOD. INSTALLATION OF LAG BOLTS SHALL CONFORM TO THE NATIONAL DESIGN SPECIFICATION FOR WOOD CONSTRUCTION WITH A LEAD BORE HOLE OF 60 TO 70 PERCENT OF THE SHANK DIAMETER. LEAD HOLES ARE NOT REQUIRED FOR 3/8" AND SMALLER LAG SCREWS.

PARTNERSHIP berger
1927 Post Alley, Ste. 2
Seattle, WA 98101
206.325.6877
bergerpartnership.com

SSF STRUCTURAL ENGINEERING
2124 Third Avenue - Suite 100 - Seattle, WA 98121
p: 206.443.6212 ssfengineers.com
934 Broadway - Tacoma, WA 98402
p: 253.284.9470 ssfengineers.com

Totem Lake Park Phase 1
City of Kirkland
12031 Totem Lake Way, Kirkland, WA 98034

SET TYPE:
Bid Set

SET ISSUE DATE:
9/13/2019

REVISIONS:

DRAWN/CHECKED:
NHD/GFJ

SHEET NAME:
GENERAL STRUCTURAL NOTES

SHEET NUMBER:
SS002

Berger Partnership Project Number: XXXXXXXX.XX Printed: 08.21.2019 9:11 AM By: Nathan Darden Filename: I:\150058604 totem lake park\phase 01\lp-ss001.dwg

Statement of Special Inspections

Special inspections shall be provided per the requirements of IBC section 1705 and as noted herein

DRIVEN DEEP FOUNDATION ELEMENTS

VERIFICATION AND INSPECTION TASK	CONTINUOUS	PERIODIC	COMMENTS	REFERENCES
1. VERIFY ELEMENT MATERIALS, SIZES AND LENGTHS COMPLY WITH THE REQUIREMENTS	X			IBC 1705.7
2. OBSERVE DRIVING OPERATIONS AND MAINTAIN COMPLETE AND ACCURATE RECORDS FOR EACH ELEMENT	X			
5. SEE STEEL CONSTRUCTION INSPECTION REQUIREMENTS FOR STEEL PILE ELEMENTS				IBC 1705.2

STRUCTURAL STEEL

VERIFICATION AND INSPECTION TASK	CONTINUOUS	PERIODIC	COMMENTS	REFERENCE
1. FABRICATED AND ERECTED STEEL:				
a. COMPLIANCE WITH DETAILS SHOWN ON CONSTRUCTION DOCUMENTS		X		AISC 360, SECTION N5.7
b. APPLICATION OF JOINT DETAILS AT EACH CONNECTION		X		
2. MATERIAL VERIFICATION OF WELD FILLER MATERIALS:				
a. IDENTIFICATION MARKINGS TO CONFORM TO AWS SPECIFICATIONS IN THE APPROVED CONSTRUCTION DOCUMENTS		X		AISC 360, SECTION A3.5 AND APPLICABLE AWS A5 DOCUMENTS
b. MANUFACTURER'S CERTIFICATE OF COMPLIANCE REQUIRED		X		
3. INSPECTION OF WELDING:				
a. COMPLETE AND PARTIAL JOINT PENETRATION GROOVE WELD	X			IBC 1705.2 AWS D1.1
b. SINGLE PASS FILLET WELDS $\leq$ 5/16"		X		

CONCRETE AND CONCRETE REINFORCING

VERIFICATION AND INSPECTION TASK	CONTINUOUS	PERIODIC	COMMENTS	REFERENCE
1. INSPECTION OF REINFORCING STEEL INCLUDING PLACEMENT		X		IBC 1908.4 ACI 318: Ch. 20, 25.2, 25.3, 26.6.1–26.6.3
2. INSPECTION OF ANCHORS CAST IN CONCRETE		X		ACI 318: 17.8.2
3. INSPECTION OF POST-INSTALLED ANCHORS IN HARDENED CONCRETE MEMBERS:				
a. ADHESIVE ANCHORS	X		SEE ICC-ES ESR REPORT FOR ADDITIONAL REQUIREMENTS	ACI 318: 17.8.2.4
4. VERIFYING USE OF REQUIRED DESIGN MIX		X		IBC 1904.1 IBC 1904.2 IBC 1908.2 IBC 1908.3 ACI 318: Ch. 19, 26.4.3, 26.4.4
5. INSPECT FORMWORK FOR GENERAL CONFORMITY TO APPROVED PLANS FOR SIZE, SHAPE, LOCATION AND DIMENSIONS OF THE CONCRETE MEMBER BEING FORMED		X		ACI 318: 26.11.1.2(b)

NOTES

1. TESTING AND SPECIAL INSPECTION REPORTS SHALL BE PREPARED FOR EACH INSPECTION ITEM ON A DAILY BASIS WHENEVER WORK IS PERFORMED ON THAT ITEM. REPORTS SHALL BE DISTRIBUTED TO OWNER, CONTRACTOR, BUILDING OFFICIAL, ARCHITECT, AND STRUCTURAL ENGINEER.

2. "STRUCTURAL STEEL" REFERS TO STEEL CONSTRUCTION DEFINED BY AISC 303, "CODE OF STANDARD PRACTICE FOR STEEL BUILDINGS AND BRIDGES."

PARTNERSHIP berger
1927 Post Alley, Ste. 2
Seattle, WA 98101
206.325.6877
bergerpartnership.com

STRUCTURAL ENGINEERING
2124 Third Avenue - Suite 100 - Seattle, WA 98121
p: 206.443.6212 ssfengineers.com
934 Broadway - Tacoma, WA 98402
p: 253.284.9470 ssfengineers.com

Totem Lake Park Phase 1
City of Kirkland
12031 Totem Lake Way, Kirkland, WA 98034

SET TYPE:
Bid Set

SET ISSUE DATE:
9/13/2019

REVISIONS:

DRAWN/CHECKED:
NHD/GFJ

SHEET NAME:
STATEMENT OF SPECIAL INSPECTIONS

SHEET NUMBER:
SS003

Berger Partnership Project Number: XXXXXXXX.XX Plotted: 08.21.2019 9:11 AM By: Nathan Darden Filename: f:\150058604 totem lake park\phase 01\tlp-ss001.dwg

PARTNERSHIP berger
1927 Post Alley, Ste. 2
Seattle, WA 98101
206.325.6877
bergerpartnership.com

SSF STRUCTURAL ENGINEERING
2124 Third Avenue - Suite 100 - Seattle, WA 98121
p: 206.443.6212 ssfengineers.com
934 Broadway - Tacoma, WA 98402
p: 253.284.9470 ssfengineers.com

Totem Lake Park Phase 1

City of Kirkland

12031 Totem Lake Way, Kirkland, WA 98034

NATHAN BRESKO
STATE OF WASHINGTON
51774
STRUCTURAL ENGINEER
PROFESSIONAL ENGINEER

SET TYPE:
Bid Set

SET ISSUE DATE:
9/13/2019

REVISIONS:

DRAWN/CHECKED:
NHD/GFJ

SHEET NAME:
STRUCTURAL SHEET LAYOUT

SHEET NUMBER:
SS100

Berger Partnership Project Number: XXXXXXXXX.XX Plotted: 08.21.2019 9:11 AM By: Nathan Darden Filename: f:\150058604 totem lake park\phase 01\tlp-ss100.dwg

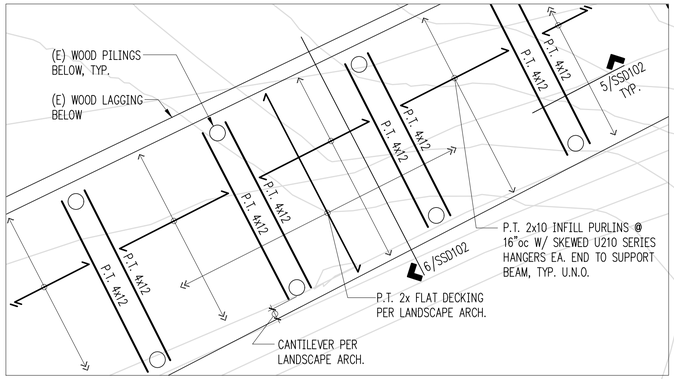

Wood Boardwalk Partial Framing Plan

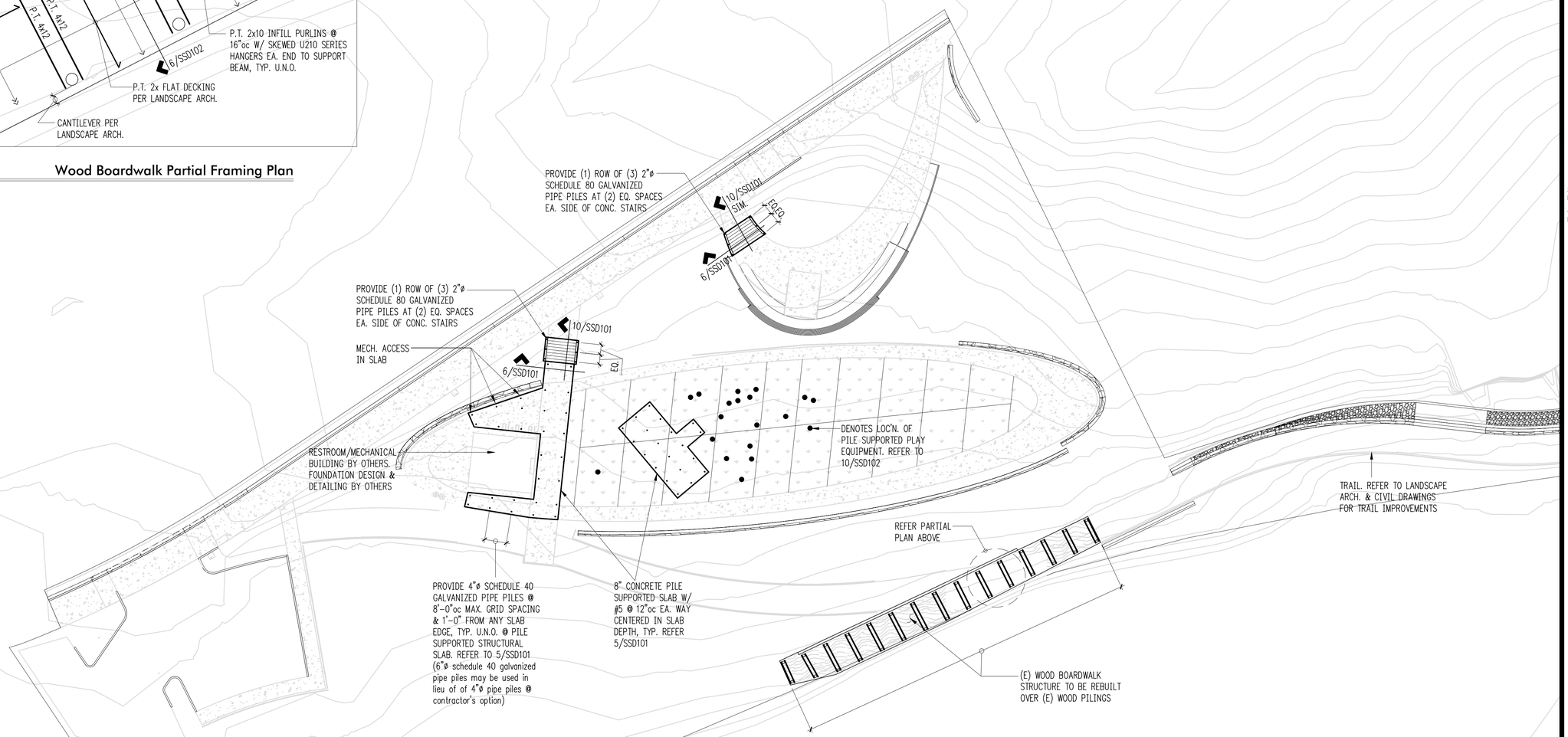

Pin Pile Plan Notes

1. PIPE PILES SHALL EITHER BE 2"ø (SCHEDULE 80), OR 4"ø (SCHEDULE 40) GALVANIZED STEEL PIPE AS CALLED FOR ON PLAN.
2. ALL PILES SHALL BE DRIVEN TO REFUSAL. REFER TO THE GEOTECHNICAL REPORT AND PIPE PILE SCHEDULE THIS SHEET FOR MINIMUM HAMMER SIZE (POUNDS) AND REFUSAL CRITERIA.
3. MINIMUM EMBEDMENT: ALL PILES SHALL BE DRIVEN COMPLETELY THROUGH LOOSE MATERIAL INTO THE UNDERLYING COMPETENT NATURAL SEDIMENTS AS DETERMINED IN THE FIELD PER THE GEOTECHNICAL REPORT.
4. MONITORING: CONTINUOUS SPECIAL INSPECTION IS REQUIRED DURING INSTALLATION OF ALL PIPE PILES.
5. LOAD TESTING: REFER TO THE GEOTECHNICAL REPORT AND PIPE PILE SCHEDULE THIS SHEET FOR LOAD TESTING RECOMMENDATIONS/REQUIREMENTS.
6. REFER GENERAL STRUCTURAL NOTES FOR ADDITIONAL REQUIREMENTS.
7. REFER TO THE GEOTECHNICAL REPORT FOR ADDITIONAL REQUIREMENTS.

Plan Notes

1. PILES SHOWN IN A GRID LINE PATTER NFOR THE AID OF INSTALLING AT A MAXIMUM SPACING OF 8'-0" AND A MAXIMUM DISTANCE OF 4'-0" FROM THE ED OF SLAB.
2. REFER TO GEOTECHNICAL REPORT FOR ADDITIONAL REQUIREMENTS.
3. REFER TO GENERAL STRUCTURAL NOTES FOR ADDITIONAL REQUIREMENTS.

Pipe Pile Schedule

PIPE ø (inches)	WALL THICKNESS	MIN. HAMMER SIZE (lbs)	REFUSAL ① CRITERIA (sec.)	ALLOWABLE ② COMPRESSIVE LOADS (kips)
2	SCHED. 80	90	60	4
4	SCHED. 40	650	20	20
6	SCHED. 40	1,500	15	30

① REFUSAL IS DEFINED AS LESS THAN 1 INCH OF PENETRATION IN "X" SECONDS UNDER CONSTANT DRIVING.
② ALLOWABLE LOADS TO BE VERIFIED BY LOAD TESTS IN ACCORDANCE WITH ASTM D-1143 "QUICK LOAD TEST."

MINOR PIPE PILE ADJUSTMENT OPTIONS TO DEAL WITH OBSTRUCTIONS:

1. PIPE PILES MAY BE SHIFTED IN ANY DIRECTION 2" FOR 2" PIPE PILES AND 4" FOR 4" PIPE PILES AND RE-DRIVEN.
2. CONTACT ENGINEER IF MINOR SHIFT IN PIPE PILE DOES NOT CLEAR OBSTRUCTION.

Park Plan

Scale: 1"=20'-0"

PARTNERSHIP berger
1927 Post Alley, Ste. 2
Seattle, WA 98101
206.325.6877
bergerpartnership.com

SSF STRUCTURAL ENGINEERING
2124 Third Avenue - Suite 100 - Seattle, WA 98121
p: 206.443.6212 ssfengineers.com
934 Broadway - Tacoma, WA 98402
p: 253.284.9470 ssfengineers.com

Totem Lake Park Phase 1
City of Kirkland
12031 Totem Lake Way, Kirkland, WA 98034

SET TYPE:
Bid Set

SET ISSUE DATE:
9/13/2019

REVISIONS:

DRAWN/CHECKED:
NHD/GFJ

SHEET NAME:
PARK PLAN

SHEET NUMBER:
SS101

Berger Partnership Project Number: XXXXXXXXX.XX Printed: 08.21.2019 9:11 AM By: Nathan Darden Filename: I:\150056604 totem lake park\phase 01\lp-ss100.dwg

Trail Plan

Scale: 1"=20'-0"

PARTNERSHIP berger
1927 Post Alley, Ste. 2
Seattle, WA 98101
206.325.6877
bergerpartnership.com

SSF STRUCTURAL ENGINEERING
2124 Third Avenue - Suite 100 - Seattle, WA 98121
p: 206.443.6212 ssfengineers.com
934 Broadway - Tacoma, WA 98402
p: 253.284.9470 ssfengineers.com

Totem Lake Park Phase 1

City of Kirkland

12031 Totem Lake Way, Kirkland, WA 98034

SET TYPE:
Bid Set

SET ISSUE DATE:
9/13/2019

REVISIONS:

DRAWN/CHECKED:
NHD/GFJ

SHEET NAME:
TRAIL PLAN

SHEET NUMBER:
SS102

Berger Partnership Project Number: XXXXXXXX.XX Plotted: 08.21.2019 9:11 AM By: Nathan Darden FileName: f:\1150058604 totem lake park\phase 01\tlp-ss100.dwg

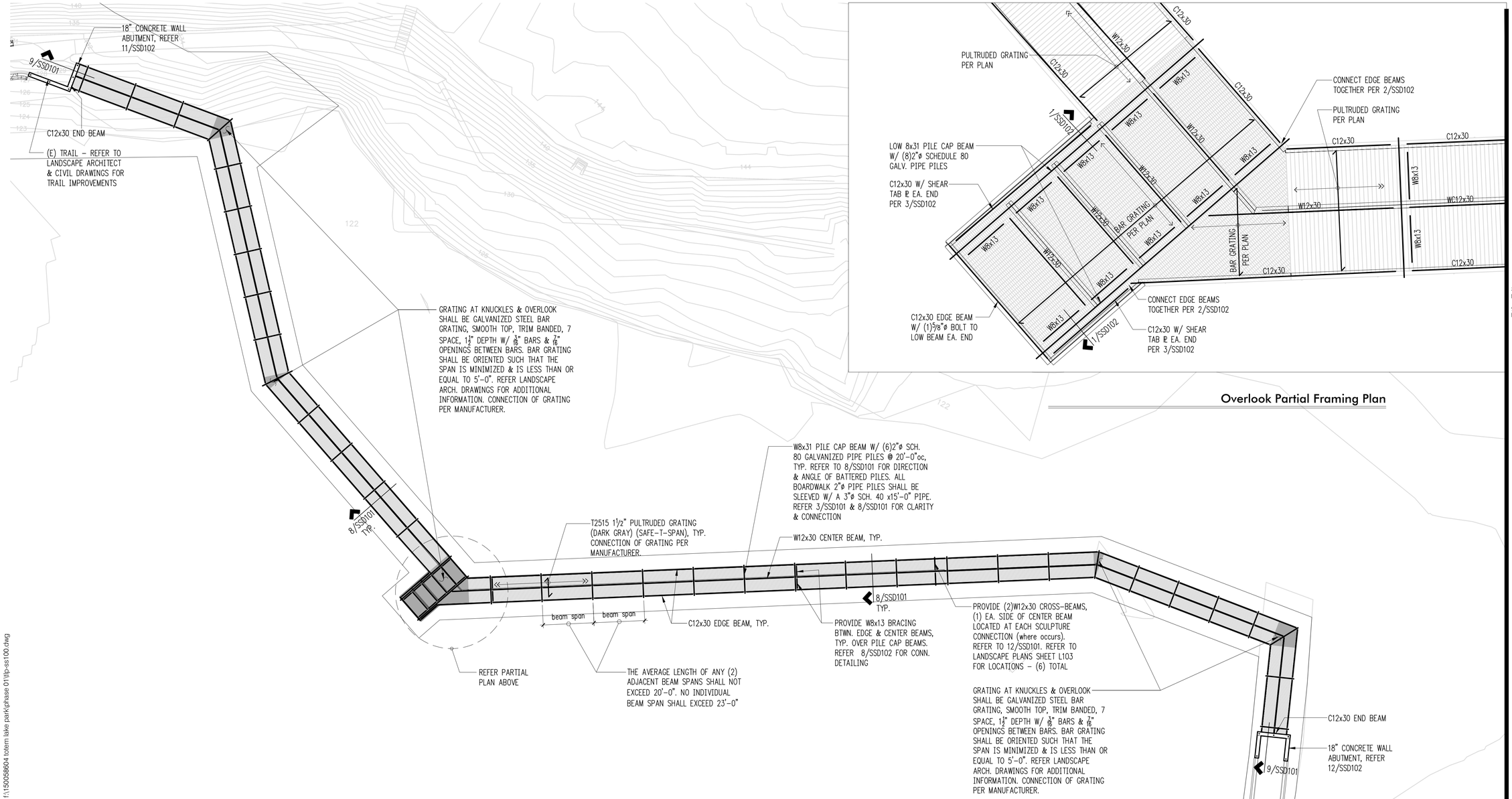

Overlook Partial Framing Plan

Boardwalk Plan

Scale: 1"=20'-0"

Pin Pile Plan Notes

1. PIPE PILES SHALL BE 2"ø (SCHEDULE 80). ALL 2"ø PIPE PILES SUPPORTING ELEVATED BOARDWALK FRAMING SHALL BE SLEEVED WITH A 3"ø SCHEDULE 40 X 15'-0" PIPE. REFER 3/SSD101 AND 8/SSD101 FOR CONNECTION DETAILING.
2. ALL PILES SHALL BE DRIVEN TO REFUSAL. REFER TO THE GEOTECHNICAL REPORT AND PIPE PILE SCHEDULE THIS SHEET FOR MINIMUM HAMMER SIZE (POUNDS) AND REFUSAL CRITERIA.
3. MINIMUM EMBEDMENT: ALL PILES SHALL BE DRIVEN COMPLETELY THROUGH LOOSE MATERIAL INTO THE UNDERLYING COMPETENT NATURAL SEDIMENTS AS DETERMINED IN THE FIELD PER THE GEOTECHNICAL REPORT.
4. MONITORING: CONTINUOUS SPECIAL INSPECTION IS REQUIRED DURING INSTALLATION OF ALL PIPE PILES.
5. LOAD TESTING: REFER TO THE GEOTECHNICAL REPORT AND PIPE PILE SCHEDULE THIS SHEET FOR LOAD TESTING RECOMMENDATIONS/REQUIREMENTS.
6. REFER GENERAL STRUCTURAL NOTES FOR ADDITIONAL REQUIREMENTS.
7. REFER TO THE GEOTECHNICAL REPORT FOR ADDITIONAL REQUIREMENTS.
8. CONTRACTOR SHALL DRIVE ALL PILES, SURVEY AS-BUILT PILE LOCATIONS, AND THEN SUBMIT SHOP DRAWINGS SHOWING AS-BUILT PILE LOCATIONS AND LENGTHS.

Plan Notes

1. DO NOT SCALE DRAWINGS. REFER TO LANDSCAPE DRAWINGS FOR DIMENSIONS & ELEVATIONS.
2. TYPICAL BOARDWALK ASSEMBLY SHALL CONSIST OF PULTRUDED GRATING OVER GALVANIZED STEEL FRAMING PER PLAN.
3. ALL FASTENERS & HARDWARE SHALL BE STAINLESS STEEL OR GALVANIZED PER GENERAL STRUCTURAL NOTES.
4. REFER TO GEOTECHNICAL REPORT FOR ADDITIONAL REQUIREMENTS.
5. REFER TO GENERAL STRUCTURAL NOTES FOR ADDITIONAL REQUIREMENTS.

Pipe Pile Schedule

PIPE ø (inches)	WALL THICKNESS	MIN. HAMMER SIZE (lbs)	REFUSAL① CRITERIA (sec.)	ALLOWABLE ② COMPRESSIVE LOADS (kips)
2	SCHED. 80	90	60	4

① REFUSAL IS DEFINED AS LESS THAN 1 INCH OF PENETRATION IN "X" SECONDS UNDER CONSTANT DRIVING.
② ALLOWABLE LOADS TO BE VERIFIED BY LOAD TESTS IN ACCORDANCE WITH ASTM D-1143 "QUICK LOAD TEST."

MINOR PIPE PILE ADJUSTMENT OPTIONS TO DEAL WITH OBSTRUCTIONS:

1. INDIVIDUAL PIPE PILES MAY BE SHIFTED ALONG THE LENGTH OF THE PILE CAP BEAMS 6" MAXIMUM IN EITHER DIRECTION.
2. PILE CAP BEAMS MAY BE SHIFTED ALONG THE LENGTH OF THE BOARDWALK 3'-0" IN EITHER DIRECTION EXCEPT AT KINKS IN BOARDWALK DIRECTIONS AND AT OVERLOOK. THE AVERAGE LENGTH OF ANY (2) ADJACENT BEAM SPANS SHALL NOT EXCEED 20'-0". NO INDIVIDUAL BEAM SPAN SHALL EXCEED 23'-0".
3. CONTACT ENGINEER IF MINOR SHIFT IN PIPE PILE DOES NOT CLEAR OBSTRUCTION.

PARTNERSHIP berger
1927 Post Alley, Ste. 2
Seattle, WA 98101
206.325.6877
bergerpartnership.com

SSF STRUCTURAL ENGINEERING
2124 Third Avenue - Suite 100 - Seattle, WA 98121
p: 206.443.6212 ssfengineers.com
934 Broadway - Tacoma, WA 98402
p: 253.284.9470 ssfengineers.com

Totem Lake Park Phase 1

City of Kirkland

12031 Totem Lake Way, Kirkland, WA 98034

SET TYPE:
Bid Set

SET ISSUE DATE:
9/13/2019

REVISIONS:

DRAWN/CHECKED:
NHD/GFJ

SHEET NAME:
BOARDWALK PLAN

SHEET NUMBER:
SS103

Berger Partnership Project Number: XXXXXXXX.XX Printed: 11.14.2019 11:59 AM By: Nathan Darden Filename: I:\150058604 totem lake park\phase 01\lp-sss100.dwg

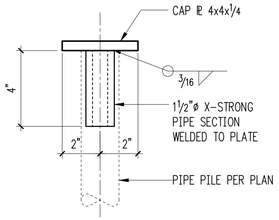

Cap For 2"ø SCH. 80 A53 GRADE B Pipe Piles

NOTE:
CUT OFF PILE AT APPROPRIATE ELEVATION IN FTG. & HAMMER CAP ONTO TOP OF PILE

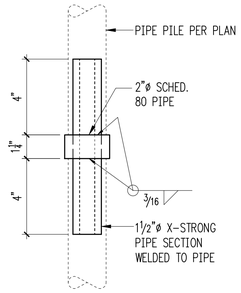

Coupler For Splicing 2"ø Sch. 80 A53 GRADE B Pipe Piles

NOTE:
SPLICE PIPE PILES BY HAMMERING COUPLER INTO END OF SECTION

NOTES:
1. PLATE MATERIAL: A36
2. ALL BOLTS, STEEL FRAMING AND PLATE MATERIAL SHALL BE GALVANIZED.

3" = 1'-0"

Pile Cap Plate - 2" Pipe 1

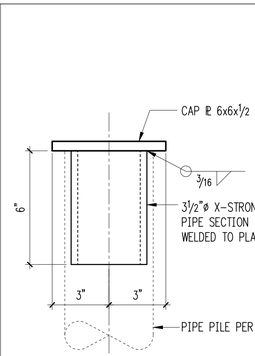

Cap For 4"ø ASTM SCH. 40 A53 Gr. B Pipe Piles

NOTE:
CUT OFF PILE AT APPROPRIATE ELEVATION IN FTG. & HAMMER CAP ONTO TOP OF PILE

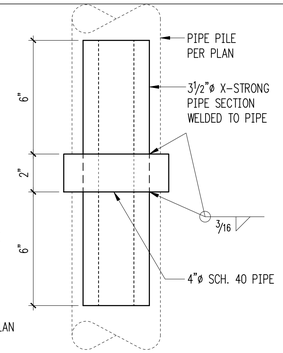

Coupler For Splicing 4"ø ASTM SCH. 40 A53 Gr. B Pipe Piles

NOTE:
SPLICE PIPE PILES BY HAMMERING COUPLER INTO END OF SECTION

NOTES:
1. PLATE MATERIAL: A36
2. ALL BOLTS, STEEL FRAMING AND PLATE MATERIAL SHALL BE GALVANIZED.

3" = 1'-0"

Pile Cap Plate - 4" Pipe 2

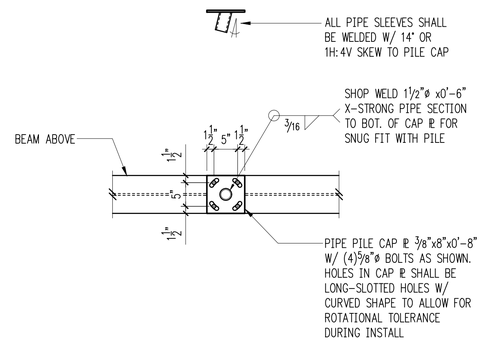

View from Below

NOTES:
1. BOLT TYPE: A307N
2. PLATE MATERIAL: A36
3. ALL BOLTS, STEEL FRAMING AND PLATE MATERIAL SHALL BE GALVANIZED.
4. OPTION TO FIELD WELD 3" SCH. 40 SLEEVE PIPE DIRECTLY TO CAP PLATE IN LIEU OF 1-1/2" PIPE SLEEVE AND 5/8"ø THRU BOLT @ CONTRACTOR'S OPTION.

3/4" = 1'-0"

3

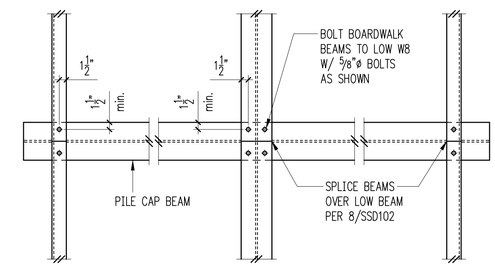

Plan View

NOTES:
1. BOLT TYPE: A307N
2. PLATE MATERIAL: A36
3. ALL BOLTS, STEEL FRAMING AND PLATE MATERIAL SHALL BE GALVANIZED.
4. GUARDRAIL, GRATING, AND BRACING BEAMS NOT SHOWN FOR CLARITY.

3/4" = 1'-0"

4

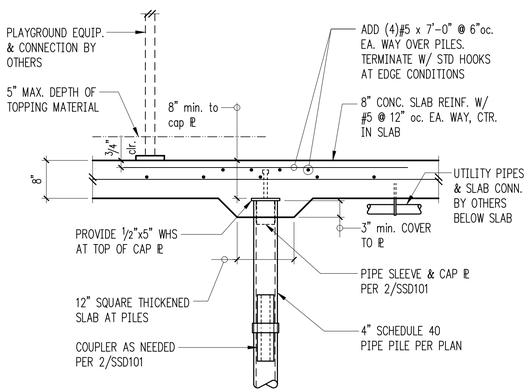

NOTES:
1. PLATE MATERIAL: A36
2. ALL BOLTS, STEEL FRAMING AND PLATE MATERIAL SHALL BE GALVANIZED.

3/4" = 1'-0"

5

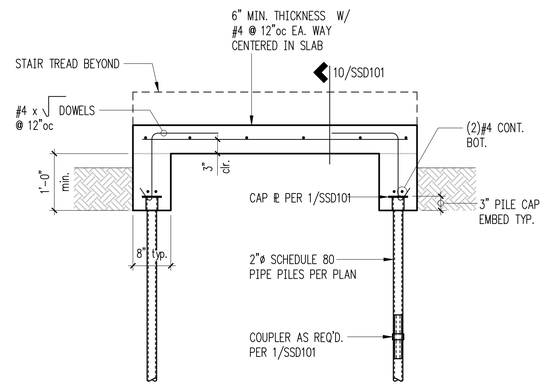

NOTES:
1. PLATE MATERIAL: A36
2. ALL BOLTS, STEEL FRAMING AND PLATE MATERIAL SHALL BE GALVANIZED.

3/4" = 1'-0"

6

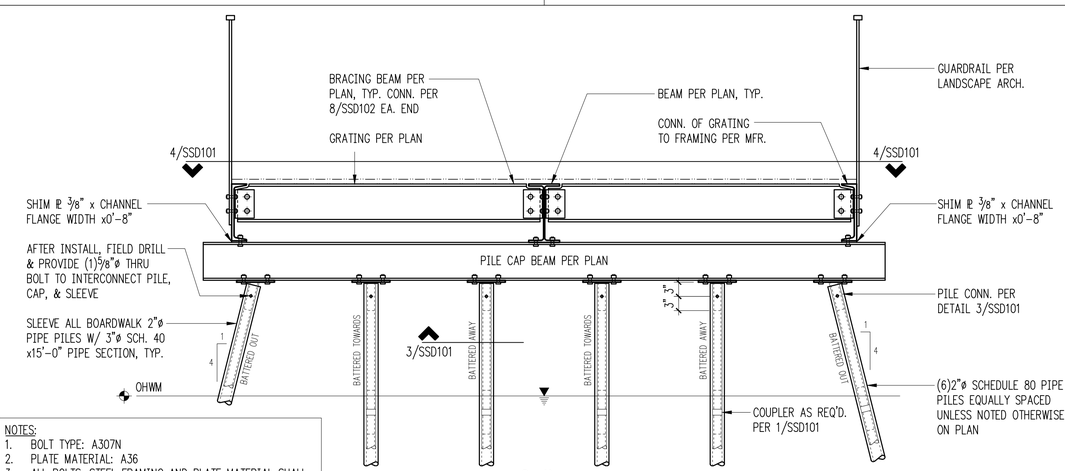

Section

NOTES:
1. BOLT TYPE: A307N
2. PLATE MATERIAL: A36
3. ALL BOLTS, STEEL FRAMING AND PLATE MATERIAL SHALL BE GALVANIZED.
4. ALL PILES SHALL BE BATTERED AT 1H:4V (14°).
5. OPTION TO FIELD WELD 3" SCH. 40 SLEEVE PIPE DIRECTLY TO CAP PLATE IN LIEU OF 1-1/2" PIPE SLEEVE AND 5/8"ø THRU BOLT @ CONTRACTOR'S OPTION.

3/4" = 1'-0"

8

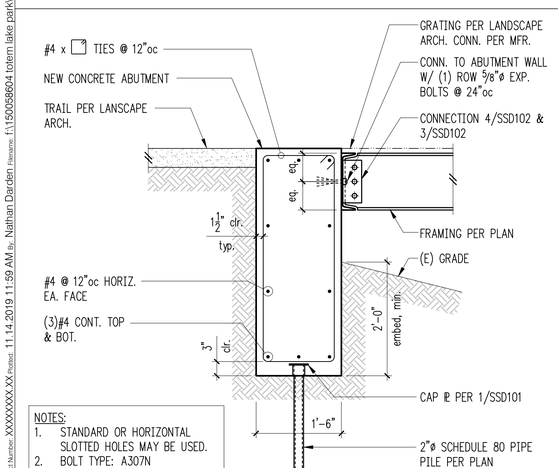

NOTES:
1. STANDARD OR HORIZONTAL SLOTTED HOLES MAY BE USED.
2. BOLT TYPE: A307N
3. PLATE MATERIAL: A36
4. ALL BOLTS, STEEL FRAMING AND PLATE MATERIAL SHALL BE GALVANIZED.

3/4" = 1'-0"

9

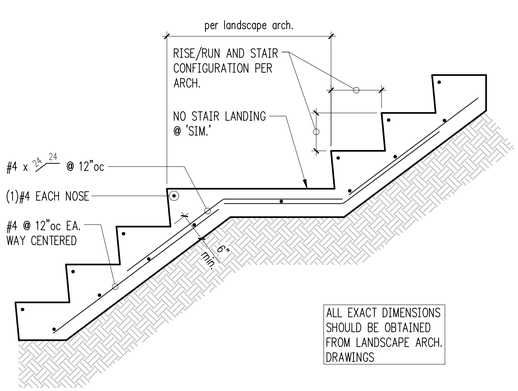

NOTES:
1. PLATE MATERIAL: A36
2. ALL BOLTS, STEEL FRAMING AND PLATE MATERIAL SHALL BE GALVANIZED.

3/4" = 1'-0"

10

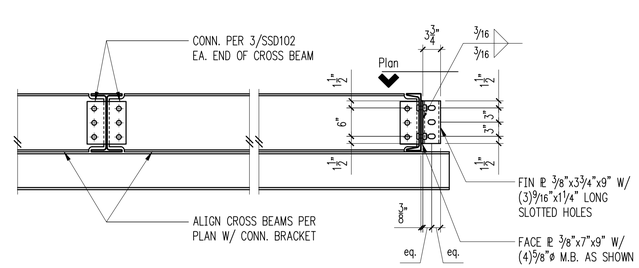

Sculpture Art Connection Bracket

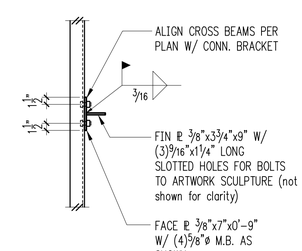

Plan

NOTES:
1. STANDARD OR HORIZONTAL SLOTTED HOLES MAY BE USED.
2. BOLT TYPE: A307N
3. PLATE MATERIAL: A36
4. ALL BOLTS, STEEL FRAMING AND PLATE MATERIAL SHALL BE GALVANIZED.

3/4" = 1'-0"

12

PARTNERSHIP berger
1927 Post Alley, Ste. 2
Seattle, WA 98101
206.325.6877
bergerpartnership.com

SSF STRUCTURAL ENGINEERING
2124 Third Avenue - Suite 100 - Seattle, WA 98121
p: 206.443.6212
ssfengineers.com
934 Broadway - Tacoma, WA 98402
p: 253.284.9470
ssfengineers.com

Totem Lake Park Phase 1

City of Kirkland

12031 Totem Lake Way, Kirkland, WA 98034

SET TYPE:
Bid Set

SET ISSUE DATE:
9/13/2019

REVISIONS:

DRAWN/CHECKED:
NHD/GFJ

SHEET NAME:
DETAILS

SHEET NUMBER:
SSD101

Berger Partnership Project Number: XXXXXXXX.XX Project: 11.14.2019 11:59 AM By: Nathan Darden Filename: f:\150058604 totem lake park\phase 01\tp-ssd101.dwg

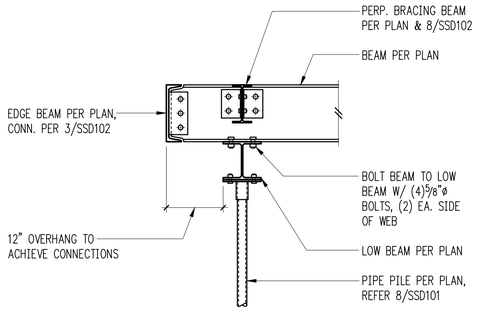

NOTES:
1. BOLT TYPE: A307N
2. PLATE MATERIAL: A36
3. ALL BOLTS, STEEL FRAMING AND PLATE MATERIAL SHALL BE GALVANIZED.

3/4" = 1'-0"

1

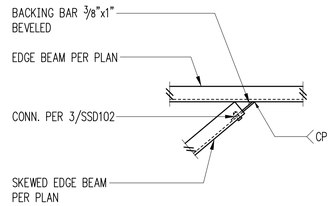

NOTES:
1. BOLT TYPE: A307N
2. PLATE MATERIAL: A36
3. ALL BOLTS, STEEL FRAMING AND PLATE MATERIAL SHALL BE GALVANIZED.

3/4" = 1'-0"

2

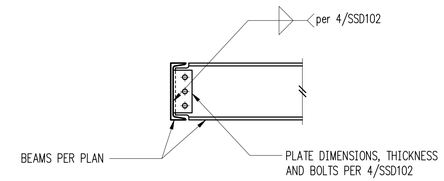

NOTES:
1. STANDARD OR HORIZONTAL SLOTTED HOLES MAY BE USED.
2. BOLT TYPE: A307N
3. PLATE MATERIAL: A36
4. ALL BOLTS, STEEL FRAMING AND PLATE MATERIAL SHALL BE GALVANIZED.

3/4" = 1'-0"

Typical Beam to Beam Connection 3

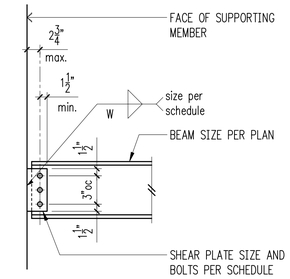

Shear Plate Schedule

Beam Size	No. of Bolts	Bolt Size	Plate Thickness	Weld Size	Capacity
C12, W12	3	3/4"ø	1/4"	3/16"	16k

NOTES:
1. STANDARD OR HORIZONTAL SLOTTED HOLES MAY BE USED.
2. BOLT TYPE: A307N
3. PLATE MATERIAL: A36
4. ALL BOLTS, STEEL FRAMING AND PLATE MATERIAL SHALL BE GALVANIZED.

3/4" = 1'-0"

Typical Single Shear Plate Connection and Schedule 4

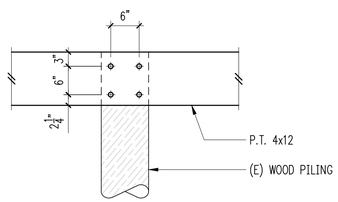

Bolt Spacing

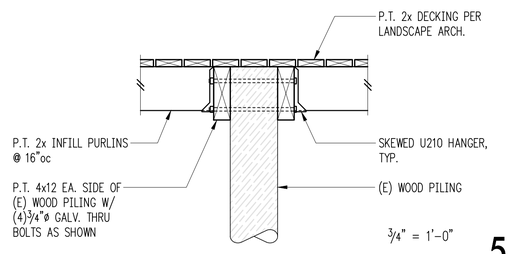

3/4" = 1'-0"

5

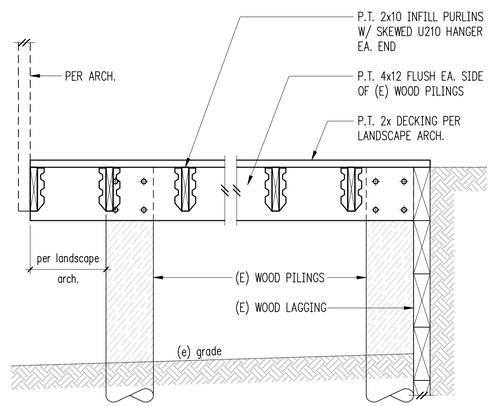

3/4" = 1'-0"

6

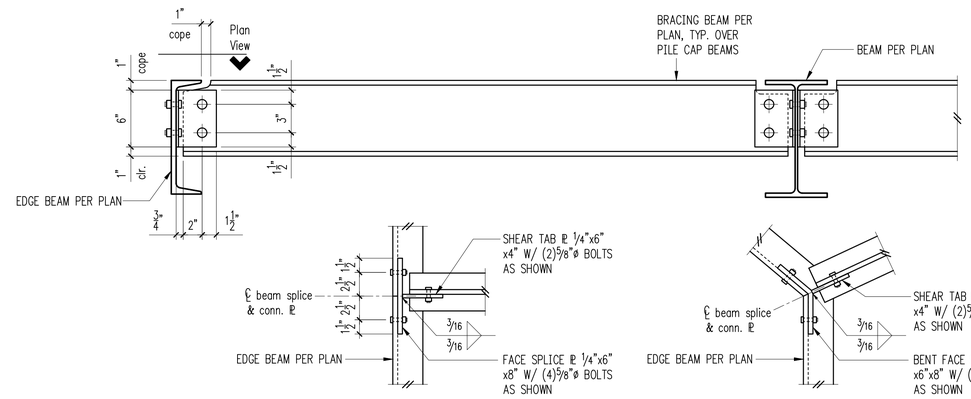

NOTES:
1. STANDARD OR HORIZONTAL SLOTTED HOLES MAY BE USED.
2. BOLT TYPE: A307N
3. PLATE MATERIAL: A36
4. ALL BOLTS, STEEL FRAMING AND PLATE MATERIAL SHALL BE GALVANIZED.

Plan View at Beam Splice
(straight run)

Plan View at Beam Splice
(kinked run)

1 1/2" = 1'-0"

8

9

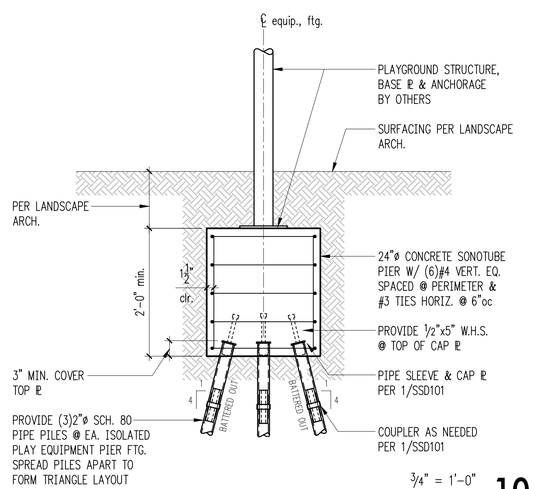

3/4" = 1'-0"

10

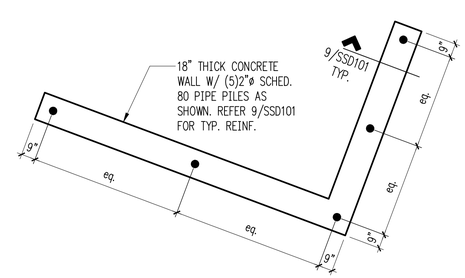

NOTES:
1. REFER LANDSCAPE ARCH. DRAWINGS FOR ALL EXACT DIMENSIONS AND ELEVATIONS.
2. BOARDWALK FRAMING AND TRAIL NOT SHOWN FOR CLARITY.

1/4" = 1'-0"

North Abutment Partial Plan 11

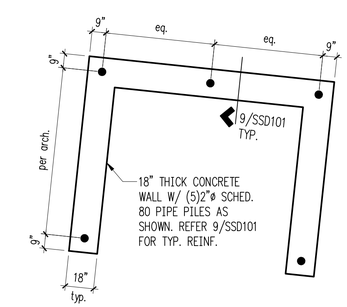

NOTES:
1. REFER LANDSCAPE ARCH. DRAWINGS FOR ALL EXACT DIMENSIONS AND ELEVATIONS.
2. BOARDWALK FRAMING AND TRAIL NOT SHOWN FOR CLARITY.

1/4" = 1'-0"

South Abutment Partial Plan 12

PARTNERSHIP berger
1927 Post Alley, Ste. 2
Seattle, WA 98101
206.325.6877
bergerpartnership.com

SSF STRUCTURAL ENGINEERING
2124 Third Avenue - Suite 100 - Seattle, WA 98121
p: 206.443.6212 ssfengineers.com
934 Broadway - Tacoma, WA 98402
p: 253.284.9470 ssfengineers.com

Totem Lake Park Phase 1

City of Kirkland

12031 Totem Lake Way, Kirkland, WA 98034

NATHAN A. BRESKO
STATE OF WASHINGTON
31728
STRUCTURAL ENGINEER
PROFESSIONAL ENGINEER

SET TYPE:
Bid Set

SET ISSUE DATE:
9/13/2019

REVISIONS:

DRAWN/CHECKED:
NHD/GFJ

SHEET NAME:
DETAILS

SHEET NUMBER:
SSD102

Berger Partnership Project Number: XXXXXXXX.XX Plotted: 12.03.2019 9:47 AM By: Nathan Darden Filename: f:\1500586604 totem lake park\phase 01\tlp-ssd102.dwg

1. STRUCTURAL NOTES
ANY DISCREPANCY FOUND AMONG THE DRAWINGS, SPECIFICATIONS, THESE NOTES, AND THE SITE CONDITIONS SHALL BE REPORTED TO THE ARCHITECT AND THE STRUCTURAL ENGINEER, WHO SHALL CORRECT SUCH DISCREPANCY IN WRITING. ANY WORK DONE BY THE CONTRACTOR AFTER DISCOVERY OF SUCH DISCREPANCY SHALL BE DONE AT THE CONTRACTOR'S RISK. THE CONTRACTOR SHALL VERIFY AND COORDINATE THE DIMENSIONS AMONG ALL DRAWINGS PRIOR TO PROCEEDING WITH ANY WORK OR FABRICATION. THE CONTRACTOR IS RESPONSIBLE FOR ALL ERECTION BRACING, FORMWORK AND TEMPORARY CONSTRUCTION SHORING.

1.1 BIDDERS WARRANTY

BY THE ACT OF SUBMITTING A BID FOR THE PROPOSED CONTRACT, THE CONTRACTOR WARRANTS THAT:

1.1.1 THE CONTRACTOR AND ALL SUBCONTRACTORS HE INTENDS TO USE (INCLUDING AGENTS AND SUPPLIERS) HAVE CAREFULLY AND THOROUGHLY REVIEWED THE DRAWINGS AND STRUCTURAL NOTES AND HAVE FOUND THEM COMPLETE AND FREE FROM AMBIGUITIES AND SUFFICIENT FOR THE PURPOSE INTENDED.

1.1.2 THE CONTRACTOR HAS CAREFULLY EXAMINED THE SITE OF THE WORK AND THAT FROM HIS OWN INVESTIGATIONS, HE HAS SATISFIED HIMSELF AS TO THE NATURE AND LOCATION OF THE WORK, AS TO THE CHARACTER, QUALITY, AND QUANTITIES OF MATERIAL AND DIFFICULTIES TO BE ENCOUNTERED, AS TO THE EXTENT OF EQUIPMENT AND OTHER FACILITIES NEEDED FOR THE PERFORMANCE OF THE WORK AND AS TO THE GENERAL AND LOCAL CONDITIONS, AND OTHER ITEMS WHICH MAY IN ANY AFFECT THE WORK OR ITS PERFORMANCE.

1.1.3 THE CONTRACTOR AND ALL WORKERS HE INTENDS TO USE ARE SKILLED AND EXPERIENCED IN THE TYPE OF CONSTRUCTION REPRESENTED BY THE DRAWINGS AND DOCUMENTS BID UPON.

1.1.4 NEITHER THE CONTRACTOR NOR ANY OF HIS EMPLOYEES, AGENTS, INTENDED SUPPLIERS, OR SUBCONTRACTORS HAVE RELIED UPON ANY VERBAL REPRESENTATIONS ALLEGEDLY AUTHORIZED OR UNAUTHORIZED FROM THE OWNER OR HIS EMPLOYEES OR AGENTS, INCLUDING THE ARCHITECT OR ENGINEERS, IN ASSEMBLING THE BID FIGURES.

1.1.5 CONTRACT DOCUMENT DRAWING COORDINATION:

1.1.5.1 THE REQUIREMENTS CONTAINED WITHIN THESE SECTIONS (1.1.5.1 THRU 1.1.5.7), SUPERSEDE REQUIREMENTS AND/OR RECOMMENDATIONS CONTAINED IN THE AISC "CODE OF STANDARD PRACTICE FOR STEEL BUILDING AND BRIDGES", AS WELL AS CASE DOCUMENT 962-D "A GUIDELINE ADDRESSING COORDINATION AND COMPLETENESS OF STRUCTURAL CONSTRUCTION DOCUMENTS"

1.1.5.2 THE CONTRACTOR AND ALL SUBCONTRACTORS HE INTENDS TO USE ARE AWARE OF AND ACKNOWLEDGE THAT CLOSE COORDINATION AMONG ARCHITECTURAL, STRUCTURAL, MECHANICAL, ELECTRICAL AND OTHER TRADE DRAWINGS IS REQUIRED.

1.1.5.3 THE CONTRACTOR AND ALL SUBCONTRACTORS HE INTENDS TO USE SHALL RECOGNIZE THAT THE PROJECT CONTRACT DOCUMENTS INCLUDE THE ARCHITECTURAL, STRUCTURAL, MECHANICAL AND ELECTRICAL AND OTHER TRADE DRAWINGS AND SPECIFICATIONS.

1.1.5.4 THE CONTRACTOR AND ALL SUBCONTRACTORS ACKNOWLEDGE THAT CLOSE COORDINATION BETWEEN DISCIPLINES INCLUDED WITHIN THE CONTRACT DOCUMENTS IS NECESSARY. ELEMENTS THAT WILL REQUIRE CLOSE COORDINATION BY THE CONTRACTOR INCLUDE (BUT ARE NOT LIMITED TO):

1. VERIFICATION OF ALL DIMENSIONS INDICATED ON THE ARCHITECTURAL AND STRUCTURAL DRAWINGS
2. DETERMINATION OF ALL COLUMN LOCATIONS
3. DETERMINATION OF TOP OF FLOOR, TOP OF STEEL, WALL PLATE AND/OR TOP OF BEAM ELEVATIONS
4. DETERMINATION OF TOP OF FOOTING ELEVATIONS AND FOOTING STEP LOCATIONS
5. MECHANICAL/ELECTRICAL EQUIPMENT LOCATIONS AND WEIGHTS
6. LOCATION AND SIZE OF ALL MECHANICAL/ ELECTRICAL PENETRATIONS THROUGH WALLS AND FLOORS/ ROOFS
7. COORDINATION WITH DESIGNERS/ SUPPLIERS OF PRE-ENGINEERED COMPONENTS (JOISTS, TRUSSES, STAIRS, ETC.)

1.1.5.5 THE CONTRACTOR AND ALL SUBCONTRACTORS HE INTENDS TO USE SHALL MAKE CONSIDERATION FOR, AND INCLUDE MONIES FOR THE ABOVE IN THE PREPARATION OF THEIR BIDS.

1.1.5.6 THE CONTRACTOR SHALL NOT SCALE THE ARCHITECTURAL AND STRUCTURAL DRAWINGS FOR LOCATIONS OF ELEMENTS NOTED ABOVE.

1.1.5.7 ELECTRONIC COPIES OF THE STRUCTURAL DRAWINGS (PDF'S, CAD DRAWINGS OR BIM MODELS) MAY BE PROVIDED TO THE CONTRACTOR FOR THEIR USE. THESE FILES MAY BE PROVIDED AT THE REQUEST OF THE CONTRACTOR FOR THEIR CONVENIENCE ONLY. THE CONTRACTOR AGREES THAT THESE FILES SHALL NOT SUPERCEDE INFORMATION SHOWN ON THE ORIGINAL BID/ CONSTRUCTION DOCUMENTS. THE CONTRACTOR AGREES TO HOLD THE STRUCTURAL ENGINEER HARMLESS FOR ANY ERRORS OR DISCREPANCIES CONTAINED WITHIN THESE ELECTRONIC FILES.

1.1.6 THE BID FIGURE IS BASED SOLELY UPON THE CONSTRUCTION CONTRACT DOCUMENTS AND PROPERLY ISSUED WRITTEN OR VERBAL REPRESENTATIONS.

1.2 CODES

1.2.1 ALL METHODS, MATERIALS AND WORKMANSHIP SHALL CONFORM TO THE 2012 INTERNATIONAL BUILDING CODE (IBC) AS AMENDED AND ADOPTED BY THE LOCAL BUILDING AUTHORITY.

1.2.2 ALL REFERENCES TO OTHER CODES, STANDARDS AND SPECIFICATIONS, (ACI, ASTM, ETC.), SHALL BE FOR THE EDITION CURRENTLY REFERENCED BY IBC AS AMENDED AND ADOPTED BY THE LOCAL BUILDING AUTHORITY.

1.3 DESIGN CRITERIA

1.3.1 UNIFORM LOADS:

LOCATION	LIVE LOAD	DEAD LOAD
ROOF	25 PSF (SNOW*)	ACTUAL
SLAB ON GRADE	50 PSF	ACTUAL

* THIS IS NOT A GROUND SNOW LOAD

1.3.1.2 SNOW LOAD (PER IBC SECTION 1608 AND CHAPTER 7 OF ASCE 7) – 25 SPF

1.3.2 CONCENTRATED LOADS:

ALL MANUFACTURERS OF PRE-ENGINEERED COMPONENTS OR SYSTEMS SHALL LOCATE, COORDINATE, VERIFY WEIGHTS, ETC., OF MECHANICAL UNITS OR OTHER CONCENTRATED LOADS AND DESIGN THEIR SYSTEM FOR THESE LOADS.

1.3.3 LATERAL LOADS:

REPORTS, CERTIFICATES, AND OTHER DOCUMENTS RELATED TO THE STRUCTURAL INSPECTION AND TESTING SHALL BE SUBMITTED BY THE CONTRACTOR TO THE ARCHITECT, OWNER AND THE LOCAL BUILDING OFFICIAL.

1.3.3.1 WIND: PER IBC SECTION 1609

BASIC WIND SPEED: 110 MPH

EXPOSURE: B

WIND IMPORTANCE FACTOR (I_w) 1.0

1.3.3.2 SEISMIC: PER IBC SECTION 1613

*NOTE: STRUCTURE IS DEFINED AS A "SIGNIFICANT STRUCTURE" PER WASHINGTON STATE RCW REQUIREMENTS.

S_{DS} : 1.36

S_{D1} : 1.45

S_S : 0.9

S_1 : 2.4

DESIGN BASE SHEAR: 8.1 KIPS

SEISMIC RESPONSE COEFFICENT (C_S): 0.54

SITE CLASS F

IMPORTANCE FACTOR, Ie = 1.0

SEISMIC DESIGN CATEGORY D

SEISMIC IMPORTANCE FACTOR (I_E): 1.0

R = 2.5 (CANTILEVERED STEEL COLUMN SYSTEM.)

R = 5.0 (BEARING WALL, SPECIAL REINFORCED MASONRY SHEAR WALLS)

ANALYSIS PROCEDURE USED: ELFA

SEISMIC FORCE-RESISTING SYSTEM	RESPONSE MODIFICATION COEFFICIENT (R)	SYSTEM OVERSTRENGTH FACTOR (Ω_0)
A. BEARING WALL SYSTEMS		
SPECIAL REINFORCED MASONRY SHEAR WALLS	5	2 1/2
C. MOMENT RESISTING FRAME SYSTEMS		
CANTILEVERED COLUMN SYSTEM	2 1/2	1 1/4

1.5 INSPECTION/TESTING REQUIREMENTS

SEE STATEMENT OF SPECIAL INSPECTION AND TESTING SHEET

1.6 SHOP DRAWINGS

SUBMIT SHOP DRAWINGS TO ARCHITECT/ENGINEER FOR THE FOLLOWING:

1.6.1 CONCRETE MIX DESIGN SUBMITTALS

1.6.2 REINFORCING STEEL

1.6.3 STRUCTURAL AND MISCELLANEOUS STEEL INCLUDING WELD INSERTS AND ANCHORS

1.6.5 GLUED-LAMINATED/PARALAMS/LSL MEMBERS

*NOTE: ALL PRE-ENGINEERED COMPONENTS SHALL BE DESIGNED BY A LICENSED STRUCTURAL ENGINEER AS REQUIRED FOR "SIGNIFICANT STRUCTURES" IN WASHINGTON STATE.

1.6.6 SHOP DRAWING REVIEW NOTES:

1. STRUCTURAL ENGINEER SHALL REVIEW SHOP DRAWINGS FOR GENERAL CONFORMANCE WITH THE PROJECT CONSTRUCTION DOCUMENTS (PLANS AND SPECIFICATIONS).
2. STRUCTURAL ENGINEERING REVIEW OF SHOP DRAWINGS SHALL NOT RELIEVE THE GENERAL CONTRACTOR OF THEIR RESPONSIBILITY FOR REVIEW OF THE SHOP DRAWINGS FOR COMPLIANCE WITH THE PROJECT REQUIREMENTS.
3. APPROVAL OF THE SHOP DRAWINGS BY THE ENGINEER OF RECORD SHALL NOT BE CONSIDERED AS A GUARANTEE BY THE ENGINEER THAT THE SHOP DRAWINGS COMPLY WITH ALL PROJECT REQUIREMENTS.
4. CONCURRENT SHOP DRAWING REVIEW SHALL ONLY BE PERMITTED IF APPROVED BY THE ARCHITECT/ENGINEER OF RECORD PRIOR TO THE START OF SHOP DRAWING REVIEW.

1.7 MISCELLANEOUS

1.7.1 VERIFY ALL DIMENSIONS AND CONDITIONS IN THE FIELD.

1.7.2 VERIFY SIZE AND LOCATION OF ALL OPENINGS IN THE FLOORS, ROOF AND WALLS WITH ARCHITECTURAL, MECHANICAL AND ELECTRICAL DRAWINGS.

1.7.3 CONSTRUCTION DETAILS NOT SPECIFICALLY SHOWN ON THE DRAWINGS SHALL FOLLOW SIMILAR DETAILS OF SECTIONS OF THIS PROJECT AS APPROVED BY THE ARCHITECT/ ENGINEER.

1.7.4 SEE ARCHITECTURAL, MECHANICAL AND ELECTRICAL DRAWINGS FOR DIMENSIONS AND LOCATIONS OF OPENINGS NOT DIMENSIONED OR SHOWN ON STRUCTURAL PLANS.

1.7.5 FOR PIPES, CONDUITS, DUCTS AND MECHANICAL EQUIPMENT SUPPORTED OR BRACED FROM STRUCTURE: CONFORM TO SHEET METAL AND AIR CONDITIONING CONTRACTORS NATIONAL ASSOCIATION, INC., PUBLICATION "APPENDIX E: SEISMIC RESTRAINT MANUAL GUIDELINES FOR MECHANICAL SYSTEMS." ALL BRACING AND SUPPORTS SHALL BE DESIGNED FOR SEISMIC HAZARD LEVEL (SHL) B. SPRINKLER LINE ATTACHMENTS SHALL CONFORM TO NFPA PAMPHLET 13.

1.7.6 THE STRUCTURE HAS BEEN DESIGNED TO RESIST CODE REQUIRED VERTICAL AND LATERAL FORCES AFTER THE CONSTRUCTION OF ALL STRUCTURAL ELEMENTS HAS BEEN COMPLETED. STABILITY OF THE STRUCTURE PRIOR TO COMPLETION IS THE SOLE RESPONSIBILITY OF THE GENERAL CONTRACTOR. THIS RESPONSIBILITY INCLUDES BUT IS NOT LIMITED TO JOB SITE SAFETY: ERECTION MEANS, METHODS, AND SEQUENCES; TEMPORARY SHORING, FORMWORK, AND BRACING; USE OF EQUIPMENT AND CONSTRUCTION PROCEDURES. WHERE SHORING IS REQUIRED, A SHORING PLAN, STAMPED BY A LICENSED PROFESSIONAL/STRUCTURAL ENGINEER SHALL BE SUBMITTED TO THE ENGINEER FOR APPROVAL.

1.8 THE FOLLOWING ITEMS ARE CONSIDERED TO BE DEFERRED SUBMITTALS UNDER SECTION 107.3.4.2 OF THE INTERNATIONAL BUILDING CODE AND MUST BE SUBMITTED TO THE ARCHITECT OR THE ENGINEER FOR REVIEW. THESE ITEMS WILL THEN BE FORWARDED TO THE BUILDING OFFICIAL FOR APPROVAL. THE DEFERRED SUBMITTAL ITEMS SHALL NOT BE INSTALLED UNTIL THEIR DESIGN AND SUBMITTAL DOCUMENTS HAVE BEEN APPROVED BY THE BUILDING OFFICIAL.

1. CONCRETE MIX DESIGNS.
2. CONNECTION OF WOOD NAILER TO THE PREFABRICATED OPEN-WEB STEEL JOIST AND JOIST GIRDERS.

1.9 FABRICATOR APPROVAL

FABRICATOR SHALL SUBMIT A CERTICATE OF COMPLIANCE AND MILL TEST REPORTS TO THE BUILDING OFFICIAL PER IBC SECTION 1704.2.2 FOR THE FOLLOWING WORK.

1. MANUFACTURERS OF CONCRETE REINFORCEMENT COMPLYING WITH ASTM A 615, WHERE PROPOSED AS A SUBSTITUTE FOR REINFORCEMENT COMPLYING WITH ASTM A 706, IN SPECIAL REINFORCED CONCRETE SHEAR WALL, WHERE APPLICABLE.

2. MATERIAL PROPERTIES VERIFYING COMPLIANCE WITH AWS D1.4 FOR WELDABILITY OF THE CONCRETE REINFORCEMENT TO BE WELDED THAT COMPLIES WITH A STANDARD OTHER THAN ASTM A 706, WHERE APPLICABLE.

SITE PREPARATION/SOIL REMEDIATION

2.1 SOIL DATA

ALL FOUNDATION TO BE SUPPORTED BY STEEL PIPE PILES. SEE GEOTECHNICAL ENGINEERING REPORT BY ASSOCIATED EARTH SCIENCES, INC. SEE GEOTECH REPORT FOR ALL SUBGRADE PREPARATION REQUIREMENTS AS WELL AS CAPILLARY BREAK AND VAPOR BARRIER RECOMMENDATIONS.

2.2 EXCAVATION

EXCAVATE TO DEPTH SHOWN AND TO FIRM UNDISTURBED MATERIAL. OVER-EXCAVATIONS SHALL BE BACKFILLED WITH LEAN CONCRETE (f'c=500-1200 PSI) OR STRUCTURAL FILL AT THE CONTRACTOR'S EXPENSE. EXERCISE EXTREME CARE DURING EXCAVATION TO AVOID DAMAGE TO BURIED LINES, TANKS, AND OTHER CONCEALED ITEMS. DO NOT PROCEED WITH WORK UNTIL RECEIVING WRITTEN INSTRUCTIONS FROM THE ARCHITECT. A COMPETENT REPRESENTATIVE OF THE OWNER SHALL INSPECT ALL FOOTING EXCAVATIONS FOR SUITABILITY OF BEARING SURFACES PRIOR TO PLACEMENT OF REINFORCING STEEL. PROVIDE DRAINAGE AS NECESSARY TO AVOID WATER-SOFTENED SUBGRADE.

2.3 FILL, BACKFILL AND COMPACTION
BACKFILL AGAINST WALLS SHALL NOT BE PLACED UNTIL AFTER THE REMOVAL OF ALL MATERIAL SUBJECT TO ROT OR CORROSION. ALL FILL PLACED AGAINST RETAINING WALLS OR BASEMENT WALLS SHALL BE FREE DRAINING GRANULAR MATERIAL. STRUCTURAL FILL OTHER THAN PER GRAVEL SHALL BE GRANULAR PLACED IN 6-INCH LIFTS AND COMPACTED TO AT LEAST 95% OF ITS MAXIMUM DRY DENSITY AS DETERMINED BY ASTM D-1557 (MOD PROCTOR). PEA GRAVEL FILL SHALL HAVE A MAXIMUM PARTICLE SIZE OF 3/8" DIAMETER.

STRUCTURAL CONCRETE

3.1 GENERAL

ALL CONCRETE SHALL BE HARD ROCK CONCRETE MEETING THE REQUIREMENTS OF ACI-301, "SPECIFICATIONS FOR STRUCTURAL CONCRETE FOR BUILDINGS." PROPORTIONING OF INGREDIENTS FOR EACH CONCRETE MIX SHALL BE BY METHOD 2 OR THE ALTERNATE PROCEDURE GIVEN IN ACI-301. PLACE CONCRETE PER ACI-304 AND CONFORM TO ACI-604 (306) FOR WINTER CONCRETING AND ACI-605 (305) FOR HOT WEATHER CONCRETING. USE INTERIOR MECHANICAL VIBRATORS WITH 7,000 RPM MINIMUM FREQUENCY. DO NOT OVER-VIBRATE. CONCRETE SHALL BE PLACED MONOLITHICALLY BETWEEN CONSTRUCTION OR CONTROL JOINTS. PROTECT ALL CONCRETE FROM PREMATURE DRYING, EXCESSIVE HOT OR COLD TEMPERATURE FOR SEVEN DAYS AFTER PLACING.

3.2 STRENGTH

TWENTY-EIGHT DAY COMPRESSIVE STRENGTHS SHALL BE:

	PSI
SLABS ON GRADE, BEAMS, COLUMNS, WALLS	4000
FOOTINGS, PILE CAPS	4000

CONCRETE SUPPLIER TO PROVIDE TEST RECORDS PER SECTION 5.3 OF ACI 318.

WHEN NO PRIOR EXPERIENCE OR TRIAL MIXTURE DATA ARE AVAILABLE, THE WATER/CEMENT RATIO FROM THE TABLE BELOW MAY BE USED, BUT ONLY WHEN SPECIAL PERMISSION IS GIVEN BY ENGINEER.

MAXIMUM ABSOLUTE WATER-CEMENT RATIO BY WEIGHT

SPECIFIED COMPRESSIVE STRENGTH	NON-AIR ENTRAINED CONCRETE	AIR-ENTRAINED CONCRETE
4000	0.44	0.35

THESE MAXIMUMS MAY BE EXCEEDED IF TEST RECORDS PER SECTION 5.3 OF ACI 318 (BUILDING CODE REQUIREMENTS FOR REINFORCED CONCRETE) ARE SUBMITTED TO AND APPROVED BY THE ENGINEER.

3.3 MATERIALS

3.3.1 CEMENT: ASTM C150, TYPE I OR TYPE II. ENGINEER'S APPROVAL IS NEEDED FOR USE OF TYPE III CEMENT.

3.3.2 COARSE AND FINE AGGREGATE: ASTM C33.

3.3.3 WATER SHALL BE CLEAN AND POTABLE.

3.3.4 FLYASH: ASTM C618 CLASS C (CLASS F SHALL BE ALLOWED IF PERMITTED BY THE STRUCTURAL ENGINEER)

3.3.5 GROUND GRANULATED BLAST FURNACE SLAG (GGBFS): ASTM C989 GRADE 100 OR 120. GGBFS SHALL NOT BE PERMITTED UNLESS REVIEWED AND APPROVED BY THE STRUCTURAL ENGINEER.

3.4 ADMIXTURES

3.4.1 WATER REDUCING ADMIXTURE: ASTM C494. ADMIXTURES SHALL BE USED IN EXACT ACCORDANCE WITH MANUFACTURER'S INSTRUCTIONS.

3.4.1.1 WATER REDUCING ADMIXTURES SHALL BE USED AT ALL HEAVILY CONGESTED AREAS (I.E. CONCRETE BEAMS, COLUMNS AND WALLS WITH REINFORCING SPACING OF 4" OR LESS)

3.4.2 CONCRETE USING ADMIXTURES TO PRODUCE FLOWABLE CONCRETE MAY BE USED SUBJECT TO ENGINEER'S APPROVAL.

3.4.3 AIR ENTRAINMENT: ASTM C260 AND ASTM C494 ENTRAIN 5% PLUS/MINUS 1.5% BY VOLUME IN ALL CONCRETE EXPOSED TO WEATHER.

3.4.4 NO OTHER ADMIXTURES PERMITTED UNLESS APPROVED BY THE ENGINEER.

3.5 FIBROUS CONCRETE REINFORCEMENT

FIBROUS REINFORCEMENT SHALL BE 100% VIRGIN POLYPROPYLENE, FIBRILLATED FIBERS CONTAINING NO REPROCESSED OLEFIN MATERIALS AND SPECIFICALLY MANUFACTURED FOR USE AS CONCRETE SECONDARY REINFORCEMENT. VOLUME PER CUBIC YARD SHALL EQUAL A MINIMUM OF 0.1% (1.5 POUNDS). FIBERS ARE FOR THE CONTROL OF CRACKING DUE TO DRYING SHRINKAGE AND THERMAL EXPANSION/ CONTRACTION, REDUCTION OF PERMEABILITY, INCREASED IMPACT CAPACITY, SHATTER RESISTANCE, ABRASION RESISTANCE, AND ADDED TOUGHNESS. FIBER MANUFACTURER MUST DOCUMENT EVIDENCE OF 5 YEAR SATISFACTORY PERFORMANCE HISTORY, COMPLIANCE WITH APPLICABLE BUILDING CODES AND ASTM C-1116 TYPE III 4.1.3 AND ASTM C-1116 PERFORMANCE LEVEL I OUTLINED IN SECTION 21 NOTE 17. FIBROUS CONCRETE REINFORCEMENT SHALL BE MANUFACTURED BY FIBERMESH COMPANY, 4019 INDUSTRY DRIVE, CHATTANOOGA, TENNESSEE, OR APPROVED EQUIVALENT.

3.9 FORMWORK AND SHORING

3.9.1 FOLLOW RECOMMENDED PRACTICE FOR CONCRETE FORMWORK (ACI-347).

3.9.4 ALL SHORING SHALL BE THE RESPONSIBILITY OF THE CONTRACTOR. FORMWORK SUPPORTS AND SHORING SHALL BE DESIGNED TO PROVIDE FINISHED CONCRETE SURFACES AT ALL FACES LEVEL, PLUMB AND TRUE TO THE DIMENSIONS AND ELEVATIONS SHOWN. TOLERANCES AND VARIATIONS SHALL BE AS SPECIFIED. A SHORING PLAN, STAMPED BY A LICENSED PROFESSIONAL ENGINEER SHALL BE SUBMITTED TO THE ENGINEER FOR APPROVAL.

3.10 REINFORCING STEEL

DETAIL, FABRICATE, AND PLACE PER ACI-315 AND ACI-318. SUPPORT REINFORCEMENT WITH APPROVED CHAIRS, SPACERS, OR TIES.

3.10.1 DEFORMED BAR REINFORCEMENT: ASTM A615 GR 60

3.10.2 WELDABLE DEFORMED BAR REINFORCEMENT: ASTM A706 GR 60 OR ASTM A615 GR 40 AS NOTED ON STRUCTURAL DRAWINGS

3.10.3 LONGITUDINAL (VERTICAL) REINFORCEMENT RESISTING SEISMIC AXIAL FORCES IN STRUCTURAL WALL BOUNDARY ELEMENTS SHALL BE ASTM A706 GR 60. ASTM A615 GR 60 MAY BE USED IF:

3.10.3.1 THE ACTUAL YIELD STRENGTH BASED ON MILL TESTS DOES NOT EXCEED THE SPECIFIED YIELD BY MORE THAN 18 KSI; AND

3.10.3.2 THE RATIO OF THE ACTUAL ULTIMATE TENSILE STRENGTH TO THE ACTUAL YIELD STRENGTH IS NOT LESS THAN 1.25.

3.10.4 WELDED WIRE FABRIC: ASTM A-185 & ASTM A-82 F_y=65 KSI

3.10.5 DEFORMED BAR ANCHORS: ASTM A-496

3.10.6 EXCEPT AS NOTED SPECIFICALLY ON THE DRAWINGS, ALL REINFORCEMENT SHALL BE LAP-SPLICED AS FOLLOWS:

#6 AND SMALLER 48 X BAR DIAMETER
#7 AND LARGER 56 X BAR DIAMETER

NO MORE THAN 50% HORIZONTAL OR VERTICAL BARS SHALL BE SPLICED AT ONE LOCATION

3.10.7 EXCEPT AS NOTED SPECIFICALLY ON THE DRAWINGS, PROVIDE CORNER BARS TO MATCH QUANTITY AND DIAMETER OF HORIZONTAL REINFORCEMENT AND LAP WITH HORIZONTAL REINFORCEMENT AS FOLLOWS:

#6 AND SMALLER 48 X BAR DIAMETER
#7 AND LARGER 56 X BAR DIAMETER

THESE CORNER BARS SHALL BE PLACED AT ALL CORNERS AND INTERSECTIONS IN FOOTINGS AND WALLS.

3.10.8 LAP WELDED WIRE FABRIC 12" OR ONE SPACING PLUS 2", WHICHEVER IS MORE.

3.11 CONCRETE COVER ON REINFORCING (UNLESS SHOWN OTHERWISE)

3.11.1	BOTTOM OF FOOTINGS	3"
3.11.2	FORMED EARTH FACE AND SLAB ON GRADE	2"
3.11.3	WALLS, WEATHER FACE	1-1/2"
3.11.4	WALLS, INSIDE FACE	1"
3.11.5	COLUMNS TO STIRRUPS	1-1/2"
3.11.6	BEAMS TO STIRRUPS	1-1/2"
3.11.7	BOTTOM OF ELEVATED STRUCTURAL SLAB	3/4"

3.12 CONSTRUCTION AND CONTROL JOINTS

3.12.1 UNLESS NOTED OTHERWISE, LOCATION OF THE CONSTRUCTION OR CONTROL JOINTS IN SLAB ON GRADE SHALL BE ON COLUMN GRIDS OR UNDER PERMANENT PARTITIONS AND SHALL NOT EXCEED 15'-0" C/C EACH WAY. SEE ARCHITECTURAL DRAWINGS FOR JOINT SPACING REQUIREMENTS AND LOCATIONS AT EXPOSED SLAB LOCATIONS.

3.12.2 CONSTRUCTION JOINT SPACING IN WALLS SHALL NOT EXCEED 50' ON CENTER EXCEPT AS DIRECTED BY THE ARCHITECT/ENGINEER.

3.13 CONDUIT AND PIPING EMBEDDED IN CONCRETE

3.13.1 ELECTRICAL CONDUIT SHALL NOT BE PLACED WITHIN A SLAB ON GRADE, BUT PLACED BELOW THE SLAB IN THE SUB-BASE.

3.13.2 NO JOISTS, BEAMS OR GIRDERS SHALL BE SLEEVED FOR PIPING OR CONDUIT EXCEPT AS NOTED ON THE STRUCTURAL DRAWINGS OR AS APPROVED BY THE ARCHITECT/ENGINEER.

3.14 GROUT FOR BEARING PLATES

THE NON-SHRINK GROUT SHALL MEET ASTM C1107 GRADE B OR EQUIVALENT (MASTERFLOW 928 BY BASF OR APPROVED EQUIVALENT). GROUT SHALL BE A PRE-PACKAGED HYDRAULIC CEMENT BASED MINERAL AGGREGATE GROUT, MIXED, PLACED AND CURED AS RECOMMENDED BY THE MANUFACTURER. COMPRESSIVE STRENGTH SHALL EXCEED 6000 PSI AT 28 DAYS.

3.19 ADHESIVE EXPANSIVE WATERSTOPS

ADHESIVE EXPANSIVE WATERSTOP SHALL BE VOLCLAY WATERSTOP-RX (AS MANUFACTURED BY CETCO), SWELLSTOP OR HYDROTIGHT (GREENSTREAK), OR APPROVED EQUIVALENT. INSTALL PER MANUFACTURER'S RECOMMENDATIONS.

3.20 INTEGRAL CONCRETE WATERPROOFING

3.20.1 XYPEX ADMIXTURE C-1000 AT THE RATE OF 2%-3% BY WEIGHT OF CEMENT AS MANUFACTURED BY XYPEX CHEMICAL CORPORATION AND APPLIED IN ACCORDANCE WITH MANUFACTURER'S RECOMMENDATIONS WHERE INDICATED ON PLAN, OR,

3.20.2 EVERDURE CALTITE ADMIXTURE AT THE RATE OF 6 GAL PER YARD AND SUPERPLASTET AS MANUFACTURED BY CEMENTAID AND APPLIED IN ACCORDANCE WITH MANUFACTURER'S RECOMMENDATION WHERE INDICATED ON PLAN.

3.20.2.1 CONCRETE FREE WATER TO CEMENT RATIO SHALL NOT EXCEED 0.45.

MASONRY

4.1 MORTAR AND GROUT

MORTAR: ASTM C-270, TYPE S, f'c = 1800 PSI AT 28 DAYS
(ASTM C-270, TYPE M, f'c = 2500 PSI AT 28 DAYS.)

GROUT: ASTM C-476, f'c = 2500 PSI AT 28 DAYS
5-1/2 SACK MIX (MINIMUM), 3/8" MAX AGGREGATE
SLUMP 8" TO 11"

4.2 REINFORCEMENT: SEE SECTION 3 OF STRUCTURAL NOTES.

4.3 CONCRETE MASONRY UNITS (CMU)

CONFORM TO ASTM C-90, MINIMUM FACE SHELL THICKNESS OF 1-1/4", GRADE N-1. MINIMUM COMPRESSIVE STRENGTH OF MASONRY (f'm) SHALL BE 1500 PSI.

4.5 INSTALLATION OF MASONRY UNITS.

PER THE IBC SECTION 2104 FOR UNIT MASONRY CONSTRUCTION REQUIREMENTS.

4.6 SPECIAL INSPECTION

THE QUALITY ASSURANCE PROGRAM SHALL COMPLY WITH THE INSPECTION AND TESTING REQUIREMENTS OF CHAPTER 17 AND TMS 602/ACI 530.1/ASCE 6.

METALS

5.1 STRUCTURAL STEEL

5.1.1 ALL DETAILING, FABRICATION, AND ERECTION SHALL CONFORM TO THE AISC, "MANUAL OF STEEL CONSTRUCTION," LATEST EDITION EXCEPT AS AMENDED BY SECTION 1.1 OF THESE STRUCTURAL NOTES.

5.1.2 STEEL W SHAPES SHALL BE ASTM A992 Fy=50 KSI. OTHER SHAPES AND PLATES SHALL BE ASTM A36 Fy=36 KSI.

5.1.3 STEEL PIPE SECTIONS (PIPE) SHALL BE ASTM A53 TYPE E OR S, GRADE B, Fy=35 KSI.

5.1.4 RECTANGULAR AND ROUND HOLLOW STEEL SECTIONS (HSS) OR TUBE STEEL SECTIONS (TS) SHALL BE ASTM A500, GRADE B, Fy=46 KSI (Fy=42 KSI FOR ROUND SECTIONS)

5.1.5 MACHINE BOLTS.

5.1.5.1 MACHINE BOLTS NOT SPECIFIED AS HIGH STRENGTH SHALL BE ASTM A-307.

5.1.5.2 HIGH STRENGTH BOLTS SHALL BE ASTM A-325 AND ASTM A-490. ALL BOLTS SHALL BE CONSIDERED BEARING TYPE WITH THREADS INCLUDED IN SHEAR PLANE (CONNECTION TYPE N) UNLESS NOTED OTHERWISE. ALL HIGH STRENGTH BOLTED CONNECTIONS SHALL BE INSTALLED WITH NUTS CONFORMING TO ASTM A563 AND HARDENED CONFORMING TO ASTM F436

5.1.5.2.1 FULLY PRE-TENSIONED AND SLIP CRITICAL CONNECTIONS SHALL BE AT LOCATIONS NOTED ON THE STRUCTURAL DRAWINGS

5.1.5.2.3 ALL HIGH STRENGTH BOLTS SHALL BE INSTALLED PER THE SPECIFICATION FOR STRUCTURAL JOINTS USING ASTM A-325 OR A-490 BOLTS (LATEST EDITION) BY THE RESEARCH COUNCIL ON STRUCTURAL CONNECTIONS (WWW.BOLTCOUNCIL.ORG).

5.1.6 STEEL ANCHORAGE ELEMENTS

5.1.6.1 THREADED RODS SHALL BE ALL-THREAD. (F_y=36 KSI) U.N.O.

5.1.6.2 STUDS:"NELSON STUDS" SHALL BE BY NELSON STUD WELDING DIVISION, GREGORY INDUSTRIES, INC. OR APPROVED EQUIVALENT. COMPLYING WITH ASTM A108 - STUDS SHALL HAVE A MINIMUM F_u OF 65 KSI.

5.1.6.3 EXPANSION ANCHORS SHALL BE HILTI KWIK BOLT TZ (ICC ESR-1917) CARBON STEEL ANCHORS, SIMPSON STRONG-BOLT (ICC ESR-1771) WEDGE ANCHORS, ITW-RED HEAD TRUEBOLT + (ICC ESR-2427) WEDGE ANCHORS, OR APPROVED EQUIVALENT WITH A CURRENT ICC REPORT THAT COMPLIES WITH THE CURRENT EDITION OF THE IBC RATED FOR USE IN CRACKED CONCRETE AND SUITABLE TO RESIST WIND AND SEISMIC FORCES IN THE SEISMIC DESIGN CATEGORY NOTED IN SECTION 1.3.

5.1.6.4 POST INSTALLED ADHESIVE (EPOXY) ANCHOR RODS & REBAR DOWELS IN CONCRETE SHALL USE AN INJECTABLE TWO-COMPONENT EPOXY ADHESIVE WITH A CURRENT ICC REPORT THAT COMPLIES WITH THE CURRENT EDITION OF THE IBC RATED FOR USE IN CRACKED CONCRETE AND SUITABLE TO RESIST WIND AND SEISMIC FORCES IN THE SEISMIC DESIGN CATEGORY NOTED IN SECTION 1.3. FOR SOLID BASE MATERIAL USE SIMPSON SET-XP (ICC ESR-2508) OR HILTI HIT-RE 500-SD EPOXY (ICC ESR-2322) OR APPROVED EQUIVALENT.

5.1.6.5 ANCHOR RODS:

ANCHOR RODS SHALL BE ASTM F 1554, Fy=36 KSI WITH HOOKED END AT STUD WALL CONNECTIONS UNLESS NOTED OTHERWISE. AT COLUMN LOCATIONS ANCHOR RODS SHALL BE ASTM F1554, F_y=36 KSI WITH HEADED OR THREADED/NUTTED END. TACK WELD NUT TO ANCHOR ROD UNLESS NOTED OTHERWISE.

HIGH STRENGTH ANCHOR RODS SHALL BE ASTM F1554, Fy=105 KSI WITH HEADED OR THREADED/NUTTED END. TACK WELD NUT TO ANCHOR ROD.

5.1.6.6 POWDER ACTUATED FASTENERS: P.D.F.'S SHALL BE A MINIMUM 0.145"Ø HILTI X-EDNI OR 0.157"Ø HILTI X-U UNIVERSAL KNURLED SHANK FASTENER UNLESS NOTED OTHERWISE. PROVIDE MINIMUM 1" PENETRATION INTO CONCRETE. AT P.D.F.'S DRIVEN INTO STEEL FASTENERS SHALL BE DRIVEN SO THAT THE POINT OF THE FASTENER COMPLETELY PENETRATES THE STEEL BASE MATERIAL.

5.1.6.6.1 AT TOPPING SLABS, P/T SLABS OR SLABS WITH RADIANT HEAT TUBES EMBEDDED WITHIN THE SLAB LIMIT THE PDF PENETRATION TO 3/4" MAXIMUM AND COORDINATE WITH TENDON/TUBE PLACEMENT AND COVER.

5.1.8 METAL PROTECTION: ALL STEEL EXPOSED TO WEATHER, MOISTURE, SOIL, OR AS NOTED SHALL BE GALVANIZED PER ASTM A-123 OR A153 AS APPLICABLE. ALL OTHER STEEL SURFACES SHALL BE SHOP PRIMED AFTER FABRICATION. LINTEL ANGLES SHALL HAVE A MINIMUM OF 1.5 OZ OF ZINC SPELTER PER SQUARE FOOT OF SURFACE AREA. REPAIR ALL DAMAGED AREAS OF GALVANIZED PARTS SUCH AS FIELD WELDS, ETC. APPLY REPAIR COATING THICKNESS GREATER THAN OR EQUAL TO ORIGINAL ZINC COATING THICKNESS.

5.1.9 WELDED MARK NUMBERS ON STRUCTURAL STEEL MEMBERS EXPOSED TO VIEW ARE UNACCEPTABLE, AND SHALL NOT BE PERMITTED. ANY WELDED MARKS SHALL BE REMOVED AT THE CONTRACTOR'S EXPENSE. SEE ARCH SPECIFICATIONS FOR ADDITIONAL REQUIREMENTS.

5.1.10 CONTRACTOR NOTE: ALL VERTICAL LOAD CARRYING MEMBERS HAVE BEEN NOTED AS "COLUMNS" ON THE STRUCTURAL DRAWINGS. THIS NOTATION DOES NOT IDENTIFY THESE MEMBERS AS "POSTS" OR "COLUMNS" AS DEFINED BY THE LATEST OSHA RULES REGARDING COLUMN ANCHORAGE REQUIREMENTS (OSHA 29 CFR PARTS 1926.751 AND 1926.755). THE GENERAL CONTRACTOR, STEEL DETAILER, AND STEEL ERECTOR SHALL BE RESPONSIBLE TO DETERMINE THE CORRECT OSHA DESIGNATION OF EACH MEMBER REGARDLESS OF THE NOTATION SHOWN ON THE STRUCTURAL DRAWINGS.

5.1.11 ALL STRUCTURAL STEEL MEMBERS EXPOSED TO VIEW SHALL BE CONSIDERED "ARCHITECTURALLY EXPOSED STRUCTURAL STEEL" (AESS) AND SHALL REQUIRE ADDITIONAL CONSIDERATION AT ALL WELDS AND CONNECTIONS PER AISC REQUIREMENTS. SEE ARCHITECTURAL DRAWINGS AND PROJECT SPECIFICATIONS FOR ADDITIONAL REQUIREMENTS.

5.2 WELDING

5.2.1 ALL WELDING SHALL BE IN ACCORDANCE WITH THE "STRUCTURAL WELDING CODE," AWS D1.1, AWS D1.4 AND AWS D1.8 AS APPROPRIATE.

5.2.2 ALL WELDING SHALL BE BY CERTIFIED WABO WELDERS; USE 70 KSI LOW HYDROGEN FILLER METAL, AND SHALL BE PROTECTED PER AWS D1.1 UNTIL USE. FOR ALL FULL PENETRATION WELDS, FILLER METAL SHALL BE NOTCH TOUGH TO MEET CHARPY V-NOTCH OF 20 FOOT-POUND AT -20°F.

5.2.3 NO WELDING OF REINFORCING STEEL SHALL BE ALLOWED EXCEPT WHERE SHOWN IN DRAWINGS. ALL WELDING OF REINFORCEMENT SHALL BE PER ANSI/AWS D1.4. THE FOLLOWING FILLER METAL SHALL BE USED WHEN WELDING REINFORCEMENT:

1. FOR WELDING OF ASTM A706 GR 60 REBAR, 80 KSI FILLER METAL

5.2.4 ALL FULL PENETRATION FIELD AND SHOP WELDS SHALL BE FULL TIME INSPECTED AND TESTED BY ULTRASONIC, NON-DESTRUCTIVE PROCEDURES. RESULTS OF TESTS SHALL BE SUBMITTED FOR REVIEW BY THE STRUCTURAL ENGINEER.

berger PARTNERSHIP
1927 Post Alley, Ste. 2
Seattle, WA 98101
206.325.6877
bergerpartnership.com

INNOVA architects
950 Pacific Avenue, Suite 450
Tacoma, WA 98402

Totem Lake Park Phase 1
City of Kirkland
12031 Totem Lake Way, Kirkland, WA 98034

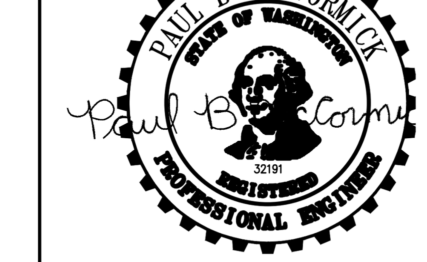

SET TYPE:
Bid Set

SET ISSUE DATE:
09/13/2019

REVISIONS:

DRAWN/CHECKED:
SH DM

SHEET NAME:
STRUCTURAL NOTES

SHEET NUMBER:
S001

5.3 WELDING PROCEDURE SPECIFICATION (WPS)

FOR ALL WELDING OF REINFORCING STEEL, NON PREQUALIFIED WELDS AND ALL WELDING OF COMPONENTS WHICH ARE PART OF THE SEISMIC FORCE RESISTING SYSTEM, CONTRACTOR SHALL SUBMIT A WELDING PROCEDURE SPECIFICATION (WPS) TO ENGINEER FOR APPROVAL. PRIOR TO WELDING, EACH WPS SHALL INCLUDE ALL NECESSARY INFORMATION REQUIRED BY AWS D1.1, AWS D1.4 AND AWS D1.8 AND AS FOLLOWS:

1. APPLICABLE BASE METAL TYPES AND THICKNESSES
2. SKETCH OF JOINT INDICATING APPLICABLE DIMENSIONS. INDIVIDUAL PASSES SHALL BE IDENTIFIED AND NUMBERED TO IDENTIFY THE SEQUENCE. THE SKETCH SHALL IDENTIFY THE MAXIMUM THICKNESS AND BEAD WIDTH. IN NO CASE SHALL THE LAYER THICKNESS EXCEED 1/4" NOR THE BEAD WIDTH EXCEED 5/8"
3. PREHEAT REQUIREMENTS.
4. ELECTRICAL CHARACTERISTICS (I.E., CURRENT, VOLTAGE, TRAVEL SPEED, ETC.) ELECTRODE REQUIREMENTS SHALL MEET THE REQUIREMENTS OF AWS A5.1, AWS A5.5, AWS A5.17, AWS A5.23, AWS A5.18, AWS A5.20, AWS A5.28, AND AWS A5.29, AS APPLICABLE FOR WELDING METHOD USED.

6. CARPENTRY

FRAMING LUMBER SHALL BE DF #2. SAWN LUMBER BEAMS AND HEADERS SHALL BE DF #2 OR AS SHOWN ON THE DRAWINGS. ALL 2" NOMINAL LUMBER SHALL BE KILN DRIED (KD). EACH PIECE OF LUMBER SHALL BEAR STAMP OF WEST COAST LUMBER INSPECTION BUREAU (WCLIB) AND/OR WESTERN WOOD PRODUCTS ASSOCIATION (WWPA) SHOWING GRADE MARK. PROVIDE CUT WASHERS OR M.I.W. WHERE BOLT HEADS, NUTS AND LAG SCREWS BEAR ON WOOD. TREAT ALL WOOD IN CONTACT WITH CONCRETE, MORTAR, GROUT, MASONRY, AND WITHIN 12" OF EARTH; ALL WOOD OVER WATER; AND ALL WOOD IN CONTACT WITH EARTH; IN ACCORDANCE WITH AWPA SPECIFICATIONS FOR THE PRESSURE TREATMENT OF WESTERN WOODS, LATEST EDITION. WHERE POSSIBLE, PRE-CUT MATERIAL BEFORE TREATMENT. ALL FIELD CUTS AND DRILLED HOLES SHALL BE FIELD TREATED IN ACCORDANCE WITH AWPA M-4.

6.1 CARPENTRY HARDWARE

6.1.1 MACHINE BOLTS SHALL BE ASTM A-307.

6.1.2 WASHERS SHALL BE MALLEABLE IRON WASHERS (MIW) OR HEAVY PLATE CUT WASHERS.

6.1.3 NAILS SHALL BE COMMON, AMERICAN OR CANADIAN MANUFACTURER ONLY WITH MIN. DIAMETERS AS FOLLOWS:

NAIL NAME	MINIMUM NAIL SHANK DIAMETER	MINIMUM NAIL LENGTH
8d	0.131"ø	2 1/2"
10d	0.148"ø	3"
16d SINKER OR 12d	0.148"ø	3 1/4"
16d	0.162"ø	3 1/2"
20d	0.192"ø	4"

6.1.4 LAG SCREWS, SHEAR PLATES-SEE NATIONAL DESIGN SPECIFICATION.

6.1.5 ANCHORS AND CONNECTIONS SHALL BE SIMPSON, USP, OR ICC (INTERNATIONAL CODE COUNCIL) APPROVED. ALL FASTENERS SHALL BE INSTALLED PER MANUFACTURER'S RECOMMENDATIONS UNLESS OTHERWISE SHOWN. SUBSTITUTED CONNECTIONS SHALL HAVE A TABULATED CAPACITY EQUAL TO OR GREATER THAN THE SPECIFIED CONNECTOR.

6.1.6 HARDWARE EXPOSED TO WEATHER OR IN UNHEATED PORTIONS OF BUILDING SHALL BE GALVANIZED PER SECTION 5 OF THESE NOTES.

6.1.6.1 HARDWARE, ANCHORS, AND FASTENERS ATTACHED TO OR IN CONTACT WITH PRESERVATIVE TREATED WOOD SHALL BE STAINLESS STEEL OR GALVANIZED, UNLESS NOTED OTHERWISE, TO A COATING THICKNESS PER THE MANUFACTURER'S RECOMMENDATIONS FOR THE TYPE OF PRESERVATIVE USED. LIGHT GAGE HANGERS IN CONTACT WITH TREATED WOOD SHALL CONFORM TO A MINIMUM GALVANIZED COATING OF G185 OR APPROVED EQUIVALENT. IF PRESERVATIVE USED IS ACZA (AMMONIACAL COPPER ZINC ARSENATE), STAINLESS STEEL SHALL BE REQUIRED. IN THE EVENT OF A CONFLICT BETWEEN THE MANUFACTURER'S RECOMMENDATIONS AND OTHER METAL PROTECTION REQUIREMENTS CONTAINED IN THESE NOTES AND THE PROJECT SPECIFICATIONS, THE MOST STRINGENT REQUIREMENT SHALL BE USED.

6.2 MINIMUM NAILING: PER IBC TABLE 2304.9.1 FASTENING SCHEDULE.

6.3 COORDINATION AT HOLES IN WOOD STUD WALLS

6.3.1 PIPES IN INTERIOR NONBEARING WALLS. STUD PARTITIONS CONTAINING PIPES SHALL BE FRAMED, AND THE JOISTS SHALL BE SPACED, SO AS TO GIVE PROPER CLEARANCE FOR THE PIPING. WHERE A PARTITION CONTAINING PIPING RUNS PARALLEL TO THE JOISTS, THE JOISTS SHALL BE DOUBLED AND SPACED SO AS TO PERMIT THE PASSAGE OF SUCH PIPING, AND SHALL BE BRIDGED. WHERE PIPES ARE PLACED IN, OR PARTIALLY IN, A PARTITION NECESSITATING THE CUTTING OF THE SOLES OR PLATES, A SIMPSON RPS STRAP SHALL BE FASTENED TO EACH PLATE ACROSS AND TO EACH SIDE OF THE OPENING WITH NOT LESS THAN SIX 16d NAILS.

6.3.2 CUTTING AND NOTCHING. IN EXTERIOR WALLS AND BEARING PARTITIONS, ANY WOOD STUD IS PERMITTED TO BE CUT OR NOTCHED TO A DEPTH NOT EXCEEDING 15 PERCENT OF ITS WIDTH. CUTTING OR NOTCHING OF STUDS TO A DEPTH NOT GREATER THAN 40 PERCENT OF THE WIDTH OF THE STUD IS PERMITTED IN NONBEARING PARTITIONS SUPPORTING NO LOADS OTHER THAN THE WEIGHT OF THE PARTITION.

6.3.2.1 ENGINEERED LUMBER. CUTTING AND NOTCHING SHALL NOT BE PERMITTED IN ENGINEERED LUMBER (LSL) STUDS WITHOUT APPROVAL FROM THE STRUCTURAL ENGINEER OF RECORD.

6.3.3 BORED HOLES. A HOLE NOT GREATER IN DIAMETER THAN 33 PERCENT OF THE STUD WIDTH IS PERMITTED TO BE BORED IN ANY WOOD STUD WITHOUT ENGINEERING VERIFICATION. BORED HOLES NOT GREATER THAN 60 PERCENT OF THE WIDTH OF THE STUD ARE PERMITTED IN NONBEARING PARTITIONS, PROVIDED NOT MORE THAN ANY TWO ADJACENT STUDS ARE SO BORED. IN NO CASE SHALL THE EDGE OF THE BORED HOLE BE NEARER THAN 5/8-INCH FROM THE EDGE OF THE STUD. BORED HOLES SHALL NOT BE LOCATED AT THE SAME SECTION OF STUD AS A NOTCH OR CUT, AND SHALL NOT BE LOCATED WITHIN 8-INCHES OF THE END OF THE STUD.

6.3.3.1 ENGINEERED LUMBER. BORED HOLES SHALL NOT BE PERMITTED IN ENGINEERED LUMBER (LSL) STUDS WITHOUT APPROVAL FROM THE STRUCTURAL ENGINEER OF RECORD.

6.4 SHEATHING (PLYWOOD/ORIENTED STRAND BOARD)
EACH SHEET SHALL BEAR THE TRADEMARK OF THE AMERICAN PLYWOOD ASSOCIATION; ALL SHEATHING SHALL CONFORM TO STANDARD PS 2 OR PRP-108. THICKNESS, NUMBER OF PLIES, AND LAY-UP AS SHOWN. ALL PLYWOOD SHALL BE C-D INTERIOR WITH EXTERIOR GLUE OR AS NOTED ON THE DRAWINGS AND SHALL BE GROUP I OR II SPECIES. EXCEPT AS OTHERWISE SHOWN, PROVIDE THE FOLLOWING MINIMUM NAILING: PANEL EDGES 10d AT 6" ON CENTER, INTERMEDIATE SUPPORT 10d AT 12" ON CENTER. GAP SHEETS 1/8" FOR 4'X8' SHEETS AND 1/4" FOR 8'X8' AND LARGER SHEETS. THE MOISTURE CONTENT SHALL NOT BE GREATER THAN 15% AT TIME OF ROOFING. USE #10 TEK SCREWS TO ATTACH SHEATHING TO STEEL BEAMS SPACING AS NOTED ABOVE.

6.5 GLUED-LAMINATED TIMBER

MATERIALS, MANUFACTURE AND QUALITY CONTROL PER ANSI/AITC A190 "STRUCTURAL GLUED LAMINATED TIMBER." CAMBER 1-1/2 TIMES DEAD LOAD DEFLECTION WHERE NOT INDICATED ON DRAWINGS. ALL BEAM MEMBERS SHALL BE COMBINATION 24F-V4 FOR SIMPLE SPANS AND 24F-V8 FOR CONTINUOUS OR CANTILEVERED SPANS AND HAVE EXTERIOR GLUE. ALL COLUMN MEMBERS SHALL BE 24F-V8 UNLESS NOTED OTHERWISE. ALL MEMBERS EXPOSED TO VIEW SHALL BE ARCHITECTURAL APPEARANCE GRADE UNLESS NOTED OTHERWISE. ALL MEMBERS CONCEALED FROM VIEW SHALL BE INDUSTRIAL APPEARANCE UNLESS NOTED OTHERWISE. SEE ARCHITECTURAL DRAWINGS AND PROJECT SPECIFICATIONS FOR ADDITIONAL REQUIREMENTS.

6.5.1 ADHESIVES SHALL MEET THE REQUIREMENTS FOR WET CONDITIONS OF SERVICE.

6.5.2 MEMBERS SHALL BE MARKED INDICATING CONFORMANCE WITH ANSI/AITC 190.1. IN ADDITION, A CERTIFICATE OF SUCH CONFORMANCE SHALL BE PROVIDED TO THE BUYER.

6.6 MANUFACTURED STRUCTURAL WOOD MEMBERS

6.6.1 PARALLAM PSL POSTS AND COLUMNS SHALL BE PARALLAM 1.8E AS MANUFACTURED BY iLEVEL OR APPROVED EQUIVALENT. PARALLAM PSL BEAMS SHALL BE PARALLAM 2.0E AS MANUFACTURED BY iLEVEL OR APPROVED EQUIVALENT.

6.6.2 TIMBERSTRAND LSL COMMERCIAL STUDS SHALL BE TIMBERSTRAND 1.8E AS MANUFACTURED BY iLEVEL OR APPROVED EQUIVALENT.

6.6.3 MICROLLAM LVL MEMBERS SHALL BE MICROLLAM 1.9E AS MANUFACTURED BY iLEVEL OR APPROVED EQUIVALENT.

6.7.3 PROPRIETARY COMPONENTS SHALL HAVE ICC (INTERNATIONAL CODE COUNCIL) APPROVAL.

6.7.4 SHOP DRAWINGS SHALL INDICATE ALL REQUIRED PERMANENT BRACING (INCLUDING BOTTOM CHORD AND WEB BRACING SYSTEM TO RESIST WIND UPLIFT FORCES). SHOP CALCULATIONS SHALL INDICATE MEMBER STRESSES, SPECIES/ GRADES AND APPLICABLE ICC APPROVAL. SHOP DRAWINGS AND CALCULATIONS SHALL BE SEALED BY A PROFESSIONAL STRUCTURAL ENGINEER REGISTERED IN THE STATE OF THE PROJECT SITE.

6.7.5 UNLESS NOTED OTHERWISE, THE TRUSS/JOIST MANUFACTURER SHALL SPECIFY AND FURNISH CONNECTION HARDWARE NECESSARY FOR INSTALLATION OF THEIR SYSTEM.

6.7.6 DESIGN AND MANUFACTURE OF METAL-PLATE-CONNECTED TRUSSES SHALL CONFORM TO CURRENT STANDARDS OF THE TRUSS PLATE INSTITUTE (TPI):

ANSI/TPI 1-2002: NATIONAL DESIGN STANDARDS FOR METAL-PLATE-CONNECTED WOOD TRUSS CONSTRUCTION.

6.7.7 DELIVERED COMPONENTS SHALL BE ACCOMPANIED BY FABRICATOR'S CERTIFICATE OF CONFORMANCE TO THE REFERENCED STANDARDS, AND BY USER ADVISORY NOTICES EQUIVALENT TO:

BUILDING COMPONENT SAFETY INFORMATION, BCSI 2006: GUIDE TO GOOD PRACTICE FOR HANDLING, INSTALLING, RESTRAINING, AND BRACING OF METAL-PLATE-CONNECTED WOOD TRUSSES.

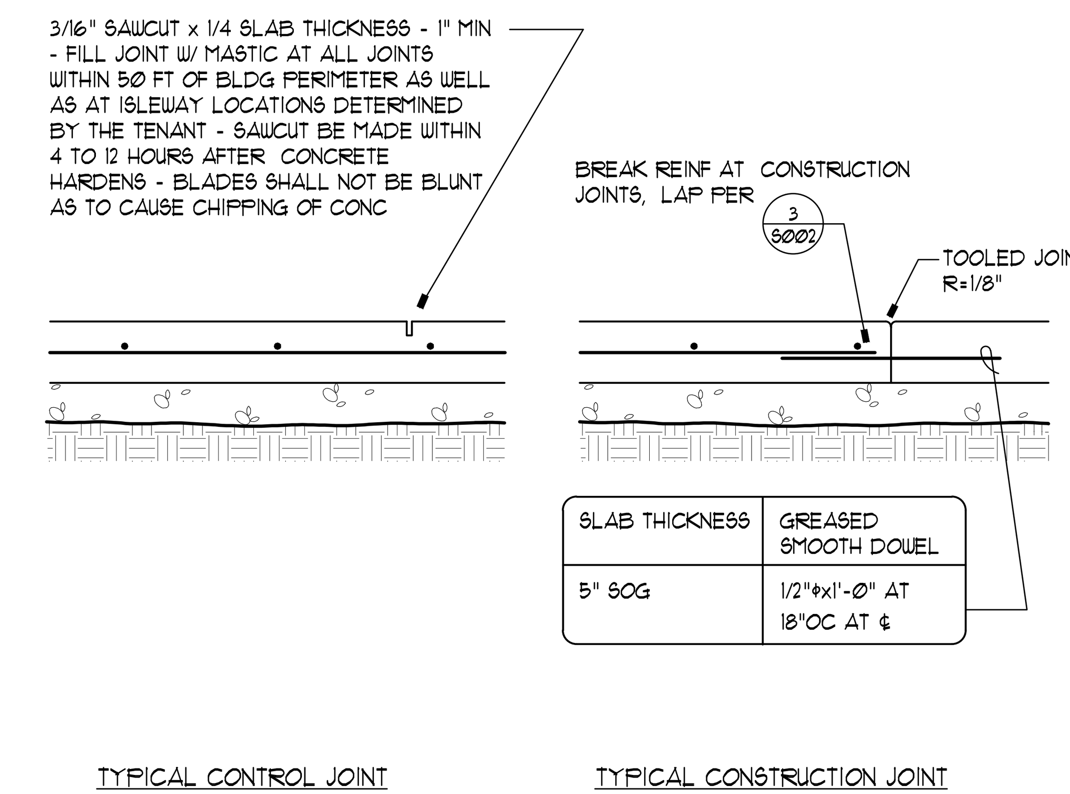

SLAB THICKNESS	GREASED SMOOTH DOWEL
5" SOG	1/2"ø x 1'-0" AT 18" OC AT ¢

SECTION (1)

NO SCALE

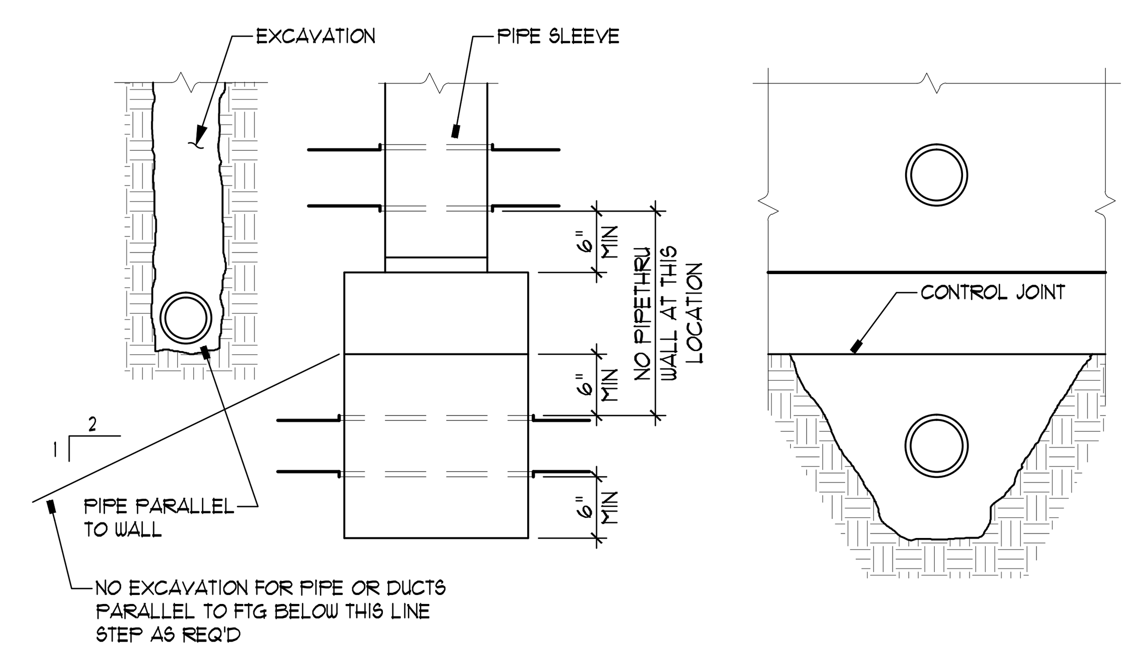

TYPICAL DETAIL OF PIPE AT CONCRETE FOOTING (2)

NO SCALE

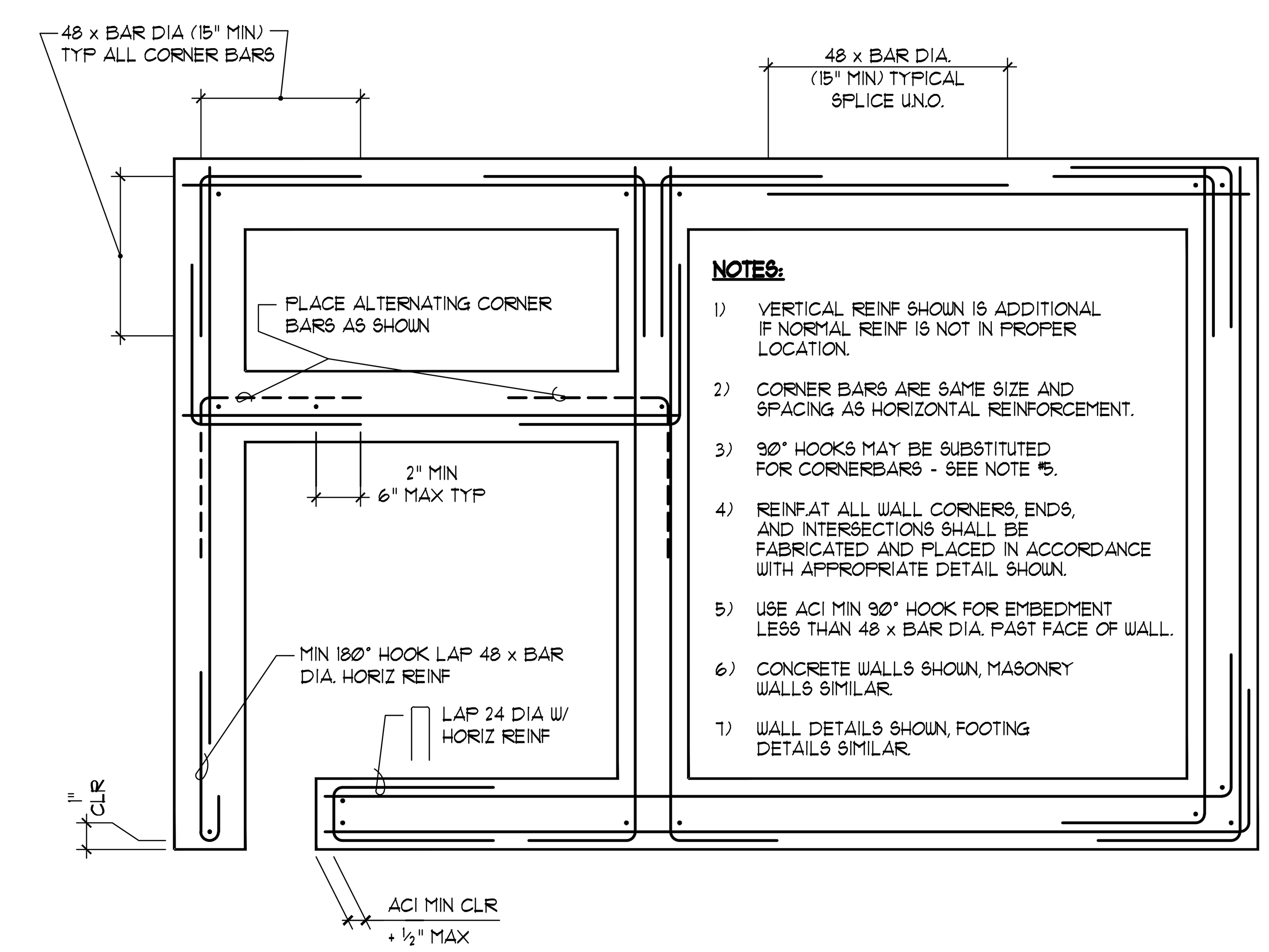

TYPICAL REINFORCEMENT PLACING DETAIL (3)

NO SCALE

KEY TO ABBREVIATIONS

#	SQUARE
ø	DIAMETER
¢	CENTERLINE
ℙ	PLATE
AB	ANCHOR BOLT
ADJ	ADJACENT
AFF	ABOVE FINISH FLOOR
ARCH	ARCHITECTURAL, ARCHITECT
ASD	ALLOWABLE STRESS DESIGN
BLKG	BLOCKING
BM	BEAM
BNDY	BOUNDARY
BOT	BOTTOM
BRG	BEARING
BS	BOTH SIDES
CLG	CEILING
CLR	CLEAR
CMU	CONCRETE MASONRY UNIT
COL	COLUMN
CONC	CONCRETE
CONT	CONTINUOUS
CSK	COUNTERSINK
CTR	CENTER
CVR	COVER
DIA	DIAMETER
DIM	DIMENSION
ELEV	ELEVATION
EMB	EMBEDMENT
ENGR	ENGINEER
EQ	EQUAL, EQUIVALENT
ES	EACH SIDE
EW	EACH WAY
EXIST, EX	EXISTING
EXP	EXPANSION
EXT	EXTERIOR
FDN	FOUNDATION
FF	FINISH FLOOR
FFE	FINISH FLOOR ELEVATION
FOC	FACE OF CONCRETE
FOM	FACE OF MASONRY
FOS	FACE OF STUD
FTG	FOOTING
GA	GAGE
GALV	GALVANIZED
GC	GENERAL CONTRACTOR
GWB	GYPSUM WALL BOARD
HGR	HANGER
HT	HEIGHT
IF	INSIDE FACE
INT	INTERIOR
JNT	JOINT
JST	JOIST
K, KIPS	KIPS = 1000 LBS
L	ANGLE
LLH	LONG LEG HORIZONTAL
LLV	LONG LEG VERTICAL
LOC	LOCATE, LOCATION
LONGIT, LONG	LONGITUDINAL
MB	MACHINE BOLT
MECH	MECHANICAL
MFR	MANUFACTURER
MIW	MALLEABLE IRON WASHER
NS	NEAR SIDE
NTS	NOT TO SCALE
NWT	NORMAL WEIGHT
O/	OVER
OC	ON CENTER
OF	OUTSIDE FACE
OPP	OPPOSITE HAND
OSB	ORIENTED STRAND BOARD
PDF	POWDER DRIVEN FASTENERS
PERP	PERPENDICULAR
PLF	POUNDS PER LINEAR FOOT
PNL	PANEL
PRE-ENG, PE	PRE-ENGINEERED
PROV	PROVIDE
PW	PLYWOOD
REF	REFERENCE
RF	ROOF
SCHED	SCHEDULE
SHTG	SHEATHING
SIM	SIMILAR
SOG	SLAB ON GRADE
SPCG	SPACING
STIFF	STIFFENER
THK	THICK
THRD	THREADED
TO	TOP OF
TOC	TOP OF CONCRETE
TOF	TOP OF FOOTING
TOPL	TOP OF PLATE
TOS	TOP OF STEEL
TOW	TOP OF WALL
TRANS, TRANSV	TRANSVERSE
TRTD	TREATED
TS	TUBE STEEL
TYP	TYPICAL
UNO	UNLESS NOTED OTHERWISE
W/	WITH
W/O	WITHOUT
WF	WIDE FLANGE

berger PARTNERSHIP
1927 Post Alley, Ste. 2
Seattle, WA 98101
206.325.6877
bergerpartnership.com

INNOVA architects
950 Pacific Avenue, Suite 450
Tacoma, WA 98402

Totem Lake Park Phase 1
City of Kirkland
12031 Totem Lake Way, Kirkland, WA 98034

PAUL B. McCORMICK
STATE OF WASHINGTON
PROFESSIONAL ENGINEER

SET TYPE:
Bid Set

SET ISSUE DATE:
09/13/2019

REVISIONS:

DRAWN/CHECKED:
SH DM

SHEET NAME:
STRUCTURAL NOTES

SHEET NUMBER:
S002

QUALITY ASSURANCE NOTES:

STATEMENT OF SPECIAL INSPECTIONS			
IBC	SI	SO	TITLE
1705.1.1	✓	✓	SPECIAL CASES (SEE FOLLOWING NOTES FOR EXTENTS)
1705.2	✓	✓	STEEL CONSTRUCTION (SEE TABLE 1705.2.3 AND AISC 360)
1705.3	✓	✓	CONCRETE CONSTRUCTION. (SEE TABLE 1705.3)
1705.5	✓	✓	WOOD CONSTRUCTION
1705.6	✓	✓	SOILS (SEE TABLE 1705.6)
1705.7	✓	✓	PILE FOUNDATIONS (SEE TABLE 1705.7)
1705.8	N/R	N/R	PIER FOUNDATIONS (SEE TABLE 1705.8)
1705.14	N/R	N/R	SPRAYED FIRE-RESISTANT MATERIALS
1705.15	N/R	N/R	MASTIC AND INTUMESCENT FIRE-RESISTANT COATINGS
1705.16	N/R	N/R	EXTERIOR INSULATION AND FINISH SYSTEMS (EIFS)
1705.17	N/R	N/R	FIRE RESISTANT PENTRATIONS AND JOINTS
1705.18	N/R	N/R	SMOKE CONTROL
1705.11.1	N/R	N/R	STRUCTURAL WOOD (WIND FORCE RESISTING SYSTEM)
1705.11.2	N/R	N/R	COLD-FORMED STEEL FRAMING (WIND FORCE RESISTING SYSTEM)
1705.11.3	N/R	N/R	WIND RESISTING COMPONENTS
1705.12.1	✓	✓	STRUCTURAL STEEL (SEISMIC FORCE RESISTING SYSTEM)
1705.12.2	✓	✓	STRUCTURAL WOOD (SEISMIC FORCE RESISTING SYSTEM)
1705.12.3	✓	✓	COLD-FORMED STEEL FRAMING (SEISMIC FORCE RESISTING SYSTEM)
1705.12.4	✓	N/R	DESIGNATED SEISMIC SYSTEM VERIFICATIONS
1705.12.5	N/R	N/R	ARCHITECTURAL COMPONENTS, ACCESS FLOORS
1705.12.6	✓	N/R	PLUMBING, MECHANICAL AND ELECTRICAL COMPONENTS
1705.12.7	N/R	N/R	STORAGE RACKS
1705.12.8	N/R	N/R	SEISMIC ISOLATION SYSTEM
1705.12.9	✓	✓	COLD-FORMED STEEL SPECIAL BOLTED MOMENT FRAMES

1) SI = SPECIAL INSPECTION REQUIRED.
2) SO = STRUCTURAL OBSERVATION REQUIRED.
3) SPECIAL INSPECTIONS INDICATED ARE FOR STRUCTURAL ELEMENTS ONLY. SEE ARCH AND ADD'L SPECIAL INSPECTIONS.
4) ✓ INDICATES REQUIRED ELEMENTS.
5) N/R = NOT REQUIRED.

1.1 INSPECTION/TESTING REQUIREMENTS

SEE DRAWINGS, SPECIFICATION, AND 2015 IBC SECTION 110, AND CHAPTER 17.

1.2 INSPECTIONS BY THE BUILDING OFFICIAL (IBC SECTION 110)

1.2.1 FOUNDATION INSPECTION SHALL BE MADE AFTER EXCAVATIONS ARE COMPLETE AND ANY REQUIRED REINFORCING IS IN PLACE. ANY REQUIRED FORMS SHALL BE IN PLACE PRIOR TO INSPECTION.

1.2.2 CONCRETE SLAB OR UNDER FLOOR INSPECTION SHALL BE MADE AFTER ALL UNDER SLAB ACCESSORIES AND REINFORCEMENT ARE PLACED AND PRIOR TO CONCRETE SLAB PLACEMENT OR FLOOR SHEATHING INSTALLATION.

1.2.3 FRAME INSPECTIONS SHALL BE MADE AFTER ALL FRAMING IS COMPLETE AND ALL PIPES, DUCTS, ELECTRICAL, PLUMBING, ETC., ARE INSTALLED AND APPROVED PRIOR TO COVER.

1.2.4 IN ADDITION TO THE INSPECTION SPECIFIED ABOVE, THE BUILDING OFFICIAL IS AUTHORIZED TO MAKE OR REQUIRE OTHER INSPECTION OF ANY CONSTRUCTION WORK TO ASCERTAIN COMPLIANCE WITH THE PROVISIONS OF THE IBC.

1.3 STRUCTURAL TESTS AND SPECIAL INSPECTIONS (IBC CHAPTER 17)

1.3.1 SEE PROJECT SPECIFICATIONS FOR ADDITIONAL REQUIREMENTS.

1.3.2 STRUCTURAL TESTS AND SPECIAL INSPECTIONS SHALL BE PERFORMED IN ACCORDANCE WITH THE REQUIREMENTS OF CHAPTER 17 OF THE IBC AS WELL AS ANY ADDITIONAL REQUIREMENTS OF THE BUILDING OFFICIAL. OMISSION FROM THE LIST BELOW OF TESTING AND INSPECTION REQUIREMENTS SHALL NOT RELIEVE THE CONTRACTOR FROM PROVIDING TESTING AND INSPECTION REQUIRED BY THE SPECIFICATIONS, THE IBC AND THE BUILDING OFFICIAL.

1.3.3 TESTING AND SPECIAL INSPECTIONS SHALL BE COMPLETED IN ACCORDANCE WITH THE REQUIREMENTS OF CHAPTER 17 OF THE IBC FOR THE ITEMS LISTED IN THIS SECTION.

1.3.4 REPORTS, CERTIFICATES AND OTHER DOCUMENTS RELATED TO THE STRUCTURAL INSPECTION AND TESTING SHALL BE THE SUBMITTED BY THE CONTRACTOR TO THE ARCHITECT, OWNER AND THE LOCAL BUILDING OFFICIAL.

1.4 STRUCTURAL OBSERVATION

1.4.1 STRUCTURAL OBSERVATION SHALL BE PERFORMED DURING CONSTRUCTION IN A MANNER AS REQUIRED TO BECOME GENERALLY FAMILIAR WITH THE IN PLACE CONSTRUCTION.

1.4.2 STRUCTURAL OBSERVATION EXTENT SHALL BE AS INDICATED ABOVE. TIMING AND DURATION OF OBSERVATIONS SHALL BE COORDINATED WITH THE GENERAL CONTRACTOR DURING CONSTRUCTION.

1.5 SPECIAL INSPECTOR: SHALL BE CURRENTLY WABO CERTIFIED AND UNDER THE SUPERVISION OF A REGISTERED PROFESSIONAL ENGINEER.

1.5.1 THE SPECIAL INSPECTOR SHALL OBSERVE THE WORK ASSIGNED FOR CONFORMANCE WITH THE APPROVED DESIGN DRAWINGS AND SPECIFICATIONS.

1.5.2 THE SPECIAL INSPECTOR SHALL FURNISH INSPECTION REPORTS TO THE BUILDING OFFICIAL, THE ENGINEER OF RECORD, THE ARCHITECT OF RECORD, AND OTHER DESIGNATED PERSONS. ALL DISCREPANCIES SHALL BE BROUGHT TO THE IMMEDIATE ATTENTION OF THE GENERAL CONTRACTOR FOR CORRECTION. THEN, IF NOT IN CONFORMANCE, TO THE PROPER DESIGN AUTHORITY AND TO THE BUILDING OFFICIAL.

1.5.3 THE SPECIAL INSPECTOR SHALL SUBMIT A SEALED FINAL REPORT BY A REGISTERED PROFESSIONAL ENGINEER STATING WHETHER THE WORK REQUIRING SPECIAL INSPECTION WAS IN CONFORMANCE WITH THE APPROVED PLANS AND SPECIFICATIONS AND THE APPLICABLE WORKMANSHIP PROVISION OF THE IBC.

1.6 SPECIAL INSPECTION FOR STEEL CONSTRUCTION:

REQUIRED VERIFICATION AND INSPECTION OF STEEL CONSTRUCTION

VERIFICATION AND INSPECTION	CONTINUOUS	PERIODIC	REFERENCED STANDARD[a]	IBC REFRENCE
1. MATERIAL VERIFICATION OF HIGH-STRENGTH BOLTS, NUTS AND WASHERS				
a. IDENTIFICATION MARKINGS TO CONFORM TO ASTM STANDARDS SPECIFIED IN THE APPROVED CONSTRUCTION DOCUMENTS	–	X	APPLICABLE ASTM MATERIAL SPECIFICATIONS; AISC 360, SECTION A3.3	–
b. MANUFACTURER'S CERTIFICATE OF COMPLIANCE REQUIRED.	–	X	–	–
2. INSPECTION OF HIGH-STRENGTH BOLTING				
a. SNUG TYPE JOINTS	–	X	AISC 360 SECTION N5.6	–
b. PRETENSIONED AND SLIP CRITICAL JOINTS USING TURN-OF-NUT WITH MATCHMARKING, TWIST-OFF BOLT OR DIRECT TENSION INDICATOR METHODS OF INSTALLATION.	–	X		
c. PRE-TENSIONED AND SLIP CRITICAL JOINTS USING TURN-OF-NUT WITHOUT MATCHMARKING OR CALIBRATED WRENCH METHODS OF INSTALLATION.	X	–		
3. MATERIAL VERIFICATION OF STRUCTURAL STEEL:				
a. FOR STRUCTURAL STEEL, INDENTIFICATION MARKINGS TO CONFORM TO AISC 360.	–	X	AISC 360, SECTION N2	
b. FOR OTHER STEEL, INDENTIFICATION MARKINGS TO CONFORM TO ASTM STANDARDS SPECIFIED IN THE APPROVED CONSTRUCTION DOCUMENTS.	–	X	APPLICABLE ASTM MATERIAL STANDARDS	
c. MANUFACTURER'S CERTIFIED TEST REPORTS	–	X		
4. MATERIAL VERIFICATION OF WELD FILLER MATERIALS:				
a. IDENTIFICATION MARKINGS TO CONFORM TO AWS SPECIFICATION IN THE APPROVED CONSTRUCTION DOCUMENTS	–	X	AISC 360, SECTION A3.5 AND APPLICABLE AWS A5 DOCUMENTS	–
b. MANUFACTURER'S CERTIFICATE OF COMPLIANCE REQUIRED.	–	X	–	–
5. INSPECTION OF WELDING				
a. STRUCTURAL STEEL AND COLD-FORMED STEEL DECK				
1) COMPLETE AND PARTIAL PENETRATION GROOVE WELDS	X	–	AWS D1.1	–
3) SINGLE PASS FILLET WELDS > 5/16"	X	–		
4) PLUG AND SLOT WELDS	X	–		
5) SINGLE PASS FILLET WELDS ≤ 5/16"	–	X		
6) FLOOR AND DECK WELDS	–	X	AWS D1.3	–
b. REINFORCING STEEL	–	–	AWS D1.4; ACI 318: 26.6.4	–
1) VERIFICATION OF WELDABILITY OF REINFORCING STEEL OTHER THAN ASTM A 706	–	X		
2) REINFORCING STEEL-RESISTING FLEXURAL AND AXIAL FORCES IN INTERMEDIATE AND SPECIAL MOMENT FRAMES, AND BOUNDARY ELEMENTS OF SPECIAL STRUCTURAL WALLS OF CONCRETE AND SHEAR REINFORCMENT	X	–		
3) SHEAR REINFORCING	X	–		
4) OTHER REINFORCING STEEL	–	X		
6. INSPECTION OF STEEL FRAME JOINT DETAILS FOR COMPLIANCE				
a. DETAILS SUCH AS BRACING AN STIFFENING	–	X	AISC 360	–
b. MEMBER LOCATIONS	–	X		
c. APPLICATION OF JOINT DETAILS AT EACH CONNECTION	–	X		

1.6.1 STEEL CONSTRUCTION: SPECIAL INSPECTION AND TESTING PER AISC 360, AISC 341 AND AWS D1.1 INCLUDING:

1. HIGH STRENGTH BOLTING: VERIFY THAT THE PROPER NUMBER AND TYPE OF BOLTS ARE INSTALLED WITH THE PROPER TORQUE. TORQUE TESTING NOT REQUIRED FOR BOLTS SPECIFIED AS BEARING TYPE (N) CONNECTIONS.

2. STRUCTURAL WELDING:

A. VERIFY THAT WELD FILLER MATERIAL AND MANUFACTURER'S CERTIFICATE OF COMPLIANCE CONFORM TO AWS SPECIFICATION SPECIFIED. VERIFY WELDERS ARE CERTIFIED BY WABO, THAT PROPER ELECTRODES IN OVEN DRY CONDITIONS ARE USED, AND THAT PROPER METHODS AND PREPARATIONS ARE USED.

B. PERIODIC SPECIAL INSPECTION OF WELDING SHALL BE PERFORMED FOR SINGLE PASS FILLET WELDS LESS THAN OR EQUAL TO 5/16" AND FLOOR AND DECK WELDS.

D. INSPECTION AND TESTING OF ALL WELDS SHALL BE AS FOLLOWS:

1. ALL WELDS SHALL BE CHECKED VISUALLY.

2. ALL SHOP AND FIELD WELDING SHALL BE SUBJECT TO INSPECTION BY A WABO CERTIFIED WELDING INSPECTOR EMPLOYED BY THE OWNER. THE INSPECTOR SHALL UTILIZE RADIOGRAPHIC, ULTRASONIC, OR MAGNETIC PARTICLE TESTING AND ANY OTHER AID TO VISUAL INSPECTION THAT MAY BE DEEMED NECESSARY TO ASSURE THE ADEQUACY OF WELDING. THE OWNER SHALL CARRY OUT TESTING AND INTERPRETATION AT ANY STAGE AFTER WELDING.

3. 10% OF ALL FILLET WELDS SHALL BE CHECKED BY MAGNETIC PARTICLE TESTING.

5. ALL WELDS FOUND DEFECTIVE AND REPAIRED SHALL BE REINSPECTED BY THE SAME METHOD ORIGINALLY USED. THE COST OF REPAIR AND REINSPECTION SHALL BE BORNE BY THE CONTRACTOR.

6. STANDARDS FOR ACCEPTANCE SHALL BE AS GIVEN IN AWS D1.1.

3. WELDING OF REINFORCING STEEL: PER IBC TABLE 1705.3 AND AWS D1.4. AND THE FOLLOWING:

A. VERIFY WELDABILITY OF REINFORCING STEEL FOR OTHER THAN ASTM A706.

B. PROVIDE WELDING PROCEDURE SPECIFICATION (WPS) PER SECTION 5.2 AND QUALIFYING TEST OF WPS AS REQ'D BY AWS D1.4.

C. CONTINUOUS SPECIAL INSPECTION SHALL BE PERFORMED PER IBC TABLE 1705.3

D. WELDS SHALL BE CHECKED BY RADIOGRAPHIC OR ULTRASONIC TESTING AS REQ'D BY AWS D1.1.

1.7 SPECIAL INSPECTION FOR CONCRETE CONSTRUCTION: IBC TABLE 1705.3

REQUIRED SPECIAL INSPECTION AND TEST OF CONCRETE CONSTRUCTION

TYPE	CONTINUOUS SPECIAL INSPECTION	PERIODIC SPECIAL INSPECTION	REFERENCED STANDARD[a]	IBC REFRENCE
1. INSPECT REINFORCEMENT, INCLUDING PRESTRESSING TENDONS, AND VERIFY PLACEMENT.	–	X	ACI 318 Ch 20, 25.2, 25.3, 26.6.1–26.6.3	1908.4
2. REINFORCING BAR WELDING: a. VERIFY WELDABILITY OF REINFORCING BARS OTHER THAN ASTM A706; b. INSPECT SINGLE-PASS FILLET WELDS, MAXIMUM 5/16" AND c. INSPECT ALL OTHER WELDS.	– X	X X	AWS D1.4 ACI 318: 26.6.4	–
3. INSPECT ANCHORS CAST IN CONCRETE.	–	X	ACI 318: 17.8.2	–
4. INSPECT ANCHORS POST-INSTALLED IN HARDENED CONCRETE MEMBERS.[b] a. ADHESIVE ANCHORS INSTALLED IN HORIZONTALLY OR UPWARDLY INCLINED ORIENTATIONS TO RESIST SUSTAINED TENSION LOADS. b. MECHANICAL ANCHORS AND ADHESIVE ANCHORS NOT DEFINED IN 4.[a]	X	 X	ACI 318: 17.8.2.4 ACI 318: 17.8.2	–
5. VERIFY USE OF REQUIRED DESIGN MIX.	–	X	ACI 318: Ch. 19, 26.4.3, 26.4.4	1904.1, 1904.2, 1908.2, 1908.3
6. PRIOR TO CONCRETE PLACEMENT, FABRICATE SPECIMENS FOR STRENGTH TESTS, PERFORM SLUMP AND AIR CONTENT TESTS, AND DETERMINE THE TEMPERATURE OF THE CONCRETE.	X	–	ASTM C172 ASTM C31 ACI 318: 26.4, 26.12	1908.10
7. INSPECT CONCRETE AND SHOTCRETE PLACEMENT FOR PROPER APPLICATION TECHNIQUES.	X	–	ACI 318: 26.5	1908.6, 1908.7, 1908.8
8. VERIFY MAINTENANCE OF SPECIFIED CURING TEMPERATURE AND TECHNIQUES.	–	X	ACI 318: 26.5.3 – 26.5.5	1908.9
9. INSPECT PRESTRESSED CONCRETE FOR: a. APPLICATION OF PRESTRESSING FORCES; AND b. GROUTING OF BONDED PRESTRESSING TENDONS.	X X	– –	ACI 318: 26.10	–
10. INSPECT ERECTION OF PRECAST CONCRETE MEMBERS.	–	X	ACI 318: Ch. 26.8	–
11. VERIFY IN-SITU CONCRETE STRENGH, PRIOR TO STRESSING OF TENDONS IN POST-TENSIONED CONCRETE AND PRIOR TO REMOVAL OF SHORES AND FORMS FROM BEAMS AND STRUCTURAL SLABS.	–	X	ACI 318: 26.11.2	–
12. INSPECT FORMWORK FOR SHAPE, LOCATION AND DIMENSIONS OF THE CONCRETE MEMBER BEING FORMED.	–	X	ACI 318: 26.11.1.2(b)	–

FOR SI: 1 INCH = 25.4 mm
a. WHERE APPLICABLE, SEE ALSO SECTION 1705.12, SPECIAL INSPECTION FOR SEISMIC RESISTANCE.
b. SPECIFIC REQUIREMENTS FOR SPECIAL INSPECTION SHALL BE INCLUDED IN THE RESEARCH REPORT FOR THE ANCHOR ISSUED BY AN APPROVED SOURCE IN ACCORDANCE WITH 17.8.2 IN ACI 318, OR OTHER QUALIFICATION PROCEDURES. WHERE SPECIFIC REQUIREMENTS ARE NOT PROVIDED, SPECIAL INSPECTION REQUIREMENTS SHALL BE SPECIFIED BY THE REGISTERED DESIGN PROFESSIONAL AND SHALL BE APPROVED BY THE BUILDING OFFICIAL PRIOR TO THE COMMENCEMENT OF THE WORK.
d. X = REQUIRED ELEMENTS
e. – = NOT REQUIRED

1.10 SPECIAL INSPECTION FOR SOILS: SPECIAL INSPECTIONS FOR EXISTING SITE SOIL CONDTIONS, FILL PLACEMENT AND LOAD BEARING REQUIIREMENTS SHALL BE AS REQUIRED BY TABLE 1705.6.

IBC TABLE 1705.6

REQUIRED SPECIAL INSPECTIONS AND TEST OF SOILS

VERIFICATION AND INSPECTION TASK	CONTINUOUS DURING TASK LISTED	PERIODICALLY DURING TASK LISTED	
1. VERIFY MATERIALS BELOW SHALLOW FOUNDATIONS ARE ADEQUATE TO ACHIEVE THE DESIGN BEARING CAPACITY	–	X	
2. VERIFY EXCAVATIONS ARE EXTENDED TO PROPER DEPTH AND HAVE REACHED PROPER MATERIAL	–	X	
3. PERFORM CLASSIFICATION AND TESTING OF COMPACTED FILL MATERIALS	–	X	
4. VERIFY USE OF PROPER MATERIALS, DENSITIES, AND LIFT THICKNESS DURING PLACEMENT AND COMPACTION OF COMPACTED FILL	X	–	
5. PRIOR TO PLACEMENT OF COMPACTED FILL, INSPECT SUBGRADE AND VERIFY THAT SITE HAS BEEN PREPARED PROPERLY	–	X	

a. X = REQUIRED ELEMENTS
b. – = NOT REQUIRED

1.13 ADDITIONAL REQUIRED SPECIAL INSPECTION FOR SEISMIC RESISTANCE PER IBC SECTION 1705:

1.13.2 WOOD CONSTRUCTION:

B. PERIODIC SPECIAL INSPECTION OF NAILING, BOLTING, ANCHORING AND OTHER FASTENING COMPONENTS WITHIN THE SEISMIC FORCES RESISTING SYSTEM INCLUDING STRUTS, BRACES, AND HOLD-DOWNS. SPECIAL INSPECTION IS NOT REQUIRED FOR SHEARWALLS AND DIAPHRAGM NAILING WHERE FASTENER SPACING IS MORE THAN 4-INCHES ON CENTER.

1.13.6 ARCHITECTURAL COMPONENTS: PERIODIC SPECIAL INSPECTION DURING THE ERECTION AND FASTENING OF EXTERIOR CLADDING, INTERIOR AND EXTERIOR NONBEARING WALLS, AND INTERIOR AND EXTERIOR VENEER EXCEPT FOR IN STRUCTURES 30-FEET OR LESS IN HEIGHT, FOR CLADDING OR VENEER 5 PSF IN WEIGHT OR LESS, OR FOR INTERIOR NONBEARING WALLS 15 PSF IN WEIGHT OR LESS.

1.14 EPOXY ANCHORS: SPECIAL INSPECTION SHALL BE REQUIRED IN ACCORDANCE WITH MANUFACTURER'S RECOMMENDATIONS.

1.15 EXPANSION ANCHORS: SPECIAL INSPECTION SHALL BE REQUIRED IN ACCORDANCE WITH MANUFACTURER'S RECOMMENDATIONS

1.16 SHOTCRETE: SEE SECTION 3.17 OF STRUCTURAL NOTES

1.17 SEISMIC JOINT SYSTEM: VERIFY JOINTS AND POLYMERIC NOSING IS INSTALLED PER MANUFACTURER'S SPECIFICATIONS. VERIFY REGLETS, FLASHING, SEISMIC JOINT COVERS, ET AL, ARE INSTALLED PROPERLY.

berger PARTNERSHIP
1927 Post Alley, Ste. 2
Seattle, WA 98101
206 325 6877
bergerpartnership.com

INNOVA architects
950 Pacific Avenue, Suite 450
Tacoma, WA 98402

Totem Lake Park Phase 1
City of Kirkland
12031 Totem Lake Way, Kirkland, WA 98034

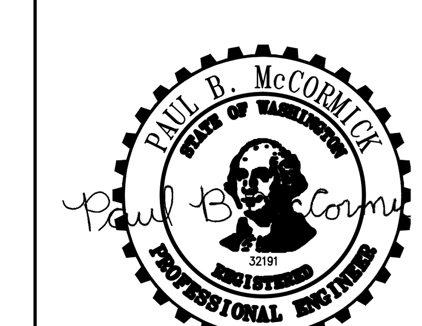

SET TYPE:
Bid Set

SET ISSUE DATE:
09/13/2019

REVISIONS:

DRAWN/CHECKED:
SH DM

SHEET NAME:
STRUCTURAL NOTES

SHEET NUMBER:
S003

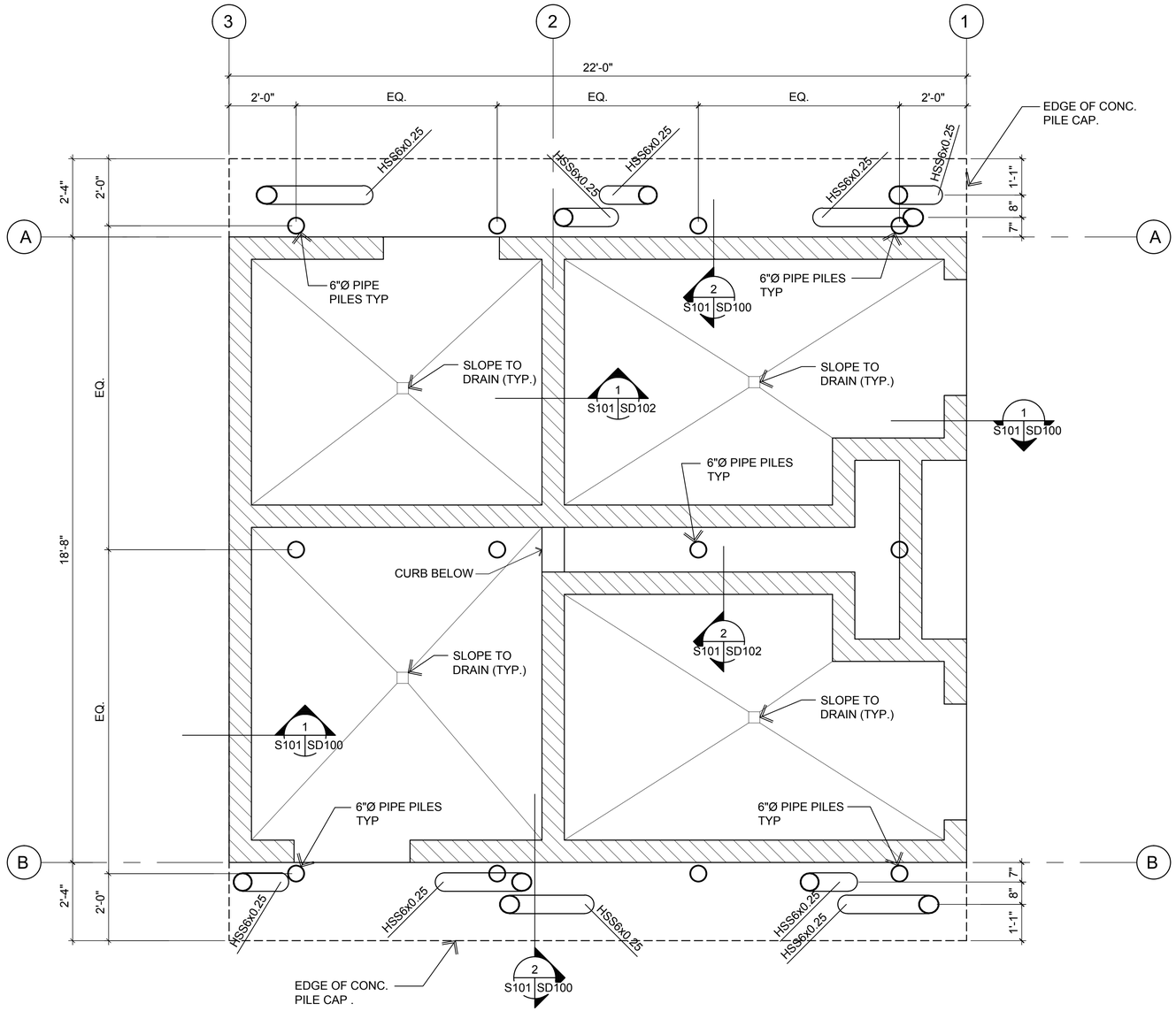

FOUNDATION PLAN
1/2" = 1'-0"
17-116-BDG
1
S101
NORTH

NOTES

1. SEE SHEET S0.1 AND S0.2 FOR STRUCTURAL NOTES AND TYPICAL DETAILS.
2. VERIFY ALL WINDOW, LOUVER, AND DOOR WIDTHS, HEIGHTS AND LOCATIONS WITH ARCHITECTURAL.
3. SEE ARCHITECTURAL/MECHANICAL DRAWINGS FOR DRAINS, SLOPES, AND OTHER FLOOR DEPRESSIONS NOT SHOWN.
4. SEE ARCHITECTURAL DRAWINGS FOR DIMENSIONS, ELEVATIONS, AND WALLS NOT SHOWN.
5. SEE SOILS REPORT FOR FOUNDATION AND PILE CAP SUPPORT.
6. SEE SHEET AD1.05 FOR COLUMN BASE PLATE LOCATIONS.
7. ALL CURBS SHALL HAVE A COVED BASE AT ALL INTERIOR FACES - SEE ARCHITECTURAL DRAWINGS.

1/2" = 1'-0" 2' 1' 0 2' 4' 6'

PARTNERSHIP berger
1927 Post Alley, Ste. 2
Seattle, WA 98101
206 325 6877
bergerpartnership.com

INNOVA architects
950 Pacific Avenue, Suite 450
Tacoma, WA 98402

Totem Lake Park Phase 1
City of Kirkland
12031 Totem Lake Way, Kirkland, WA 98034

PAUL B. McCORMICK
STATE OF WASHINGTON
PROFESSIONAL ENGINEER

SET TYPE:
Bid Set

SET ISSUE DATE:
09/13/2019

REVISIONS:

DRAWN/CHECKED:
SH DM

SHEET NAME:
FOUNDATION PLAN

SHEET NUMBER:
S101

ROOF FRAMING NOTES:

1. ALL WOOD STUD WALLS ABOVE ALL 8" CMU WALLS SHALL BE TYPE W/6 SHEAR WALLS U.N.O. SEE 1 / SD101 FOR SHEARWALL SCHEDULE.
2. SEE ARCH DRAWING AD101 FOR ROOF SLOPE.
3. SEE STRUCT DRAWING SD101 FOR TYPICAL MASONRY DETAILS AND LINTEL SCHEDULE.
4. VERIFY ALL WINDOW, LOUVER AND DOOR WIDTHS, HEIGHTS AND LOCATIONS WITH ARCHITECTURAL.

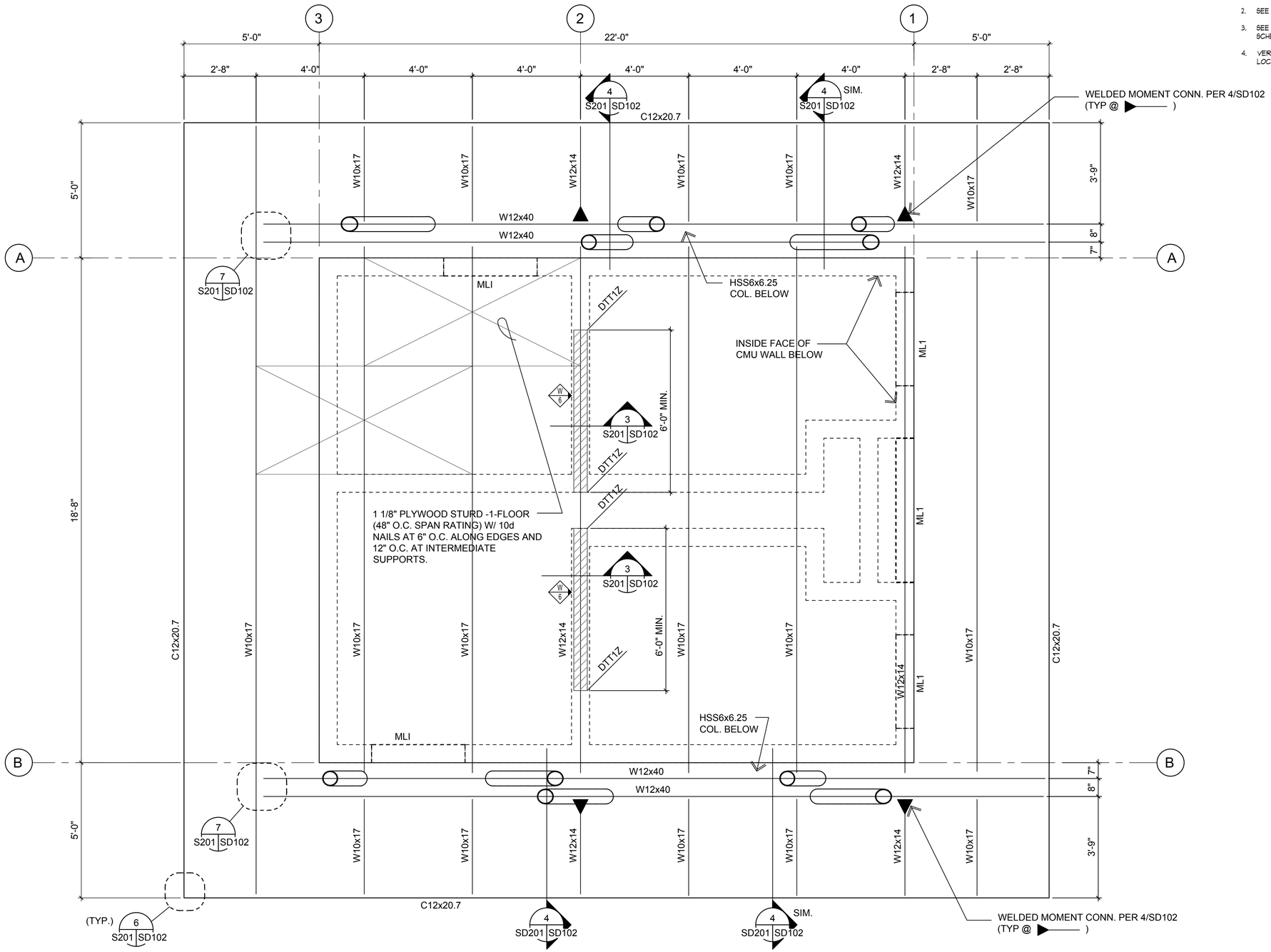

ROOF FRAMING PLAN
1/2" = 1'-0" 17-116-BDG 1 S201 NORTH

1/2" = 1'-0" 2' 1' 0 2' 4' 6'

PARTNERSHIP berger
1927 Post Alley, Ste. 2
Seattle, WA 98101
206 325 6877
bergerpartnership.com

INNOVA architects
950 Pacific Avenue, Suite 450
Tacoma, WA 98402

Totem Lake Park Phase 1
City of Kirkland
12031 Totem Lake Way, Kirkland, WA 98034

PAUL B. McCORMICK STATE OF WASHINGTON 32191 PROFESSIONAL ENGINEER

SET TYPE:
Bid Set

SET ISSUE DATE:
09/13/2019

REVISIONS:

DRAWN/CHECKED:
SH DM

SHEET NAME:
ROOF FRAMING PLAN

SHEET NUMBER:
S201

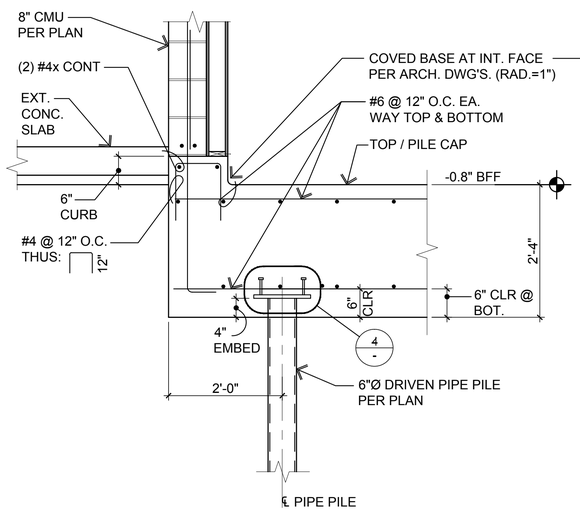

SECTION
3/4" = 1'-0"
1 S101 SD100

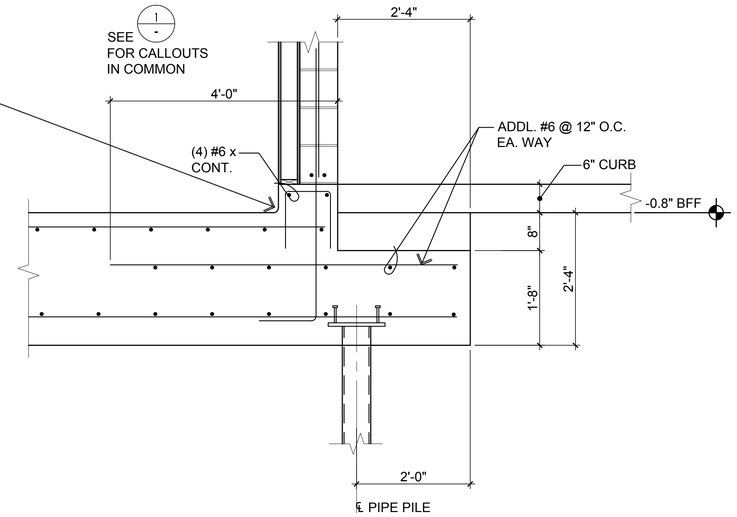

SECTION
3/4" = 1'-0"
2 S101 SD100

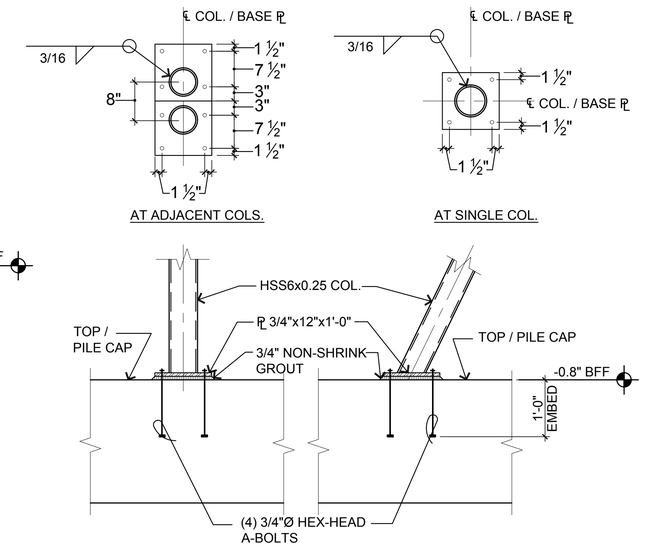

COLUMN BASE PLATE
3/4" = 1'-0"
3 S101 SD100

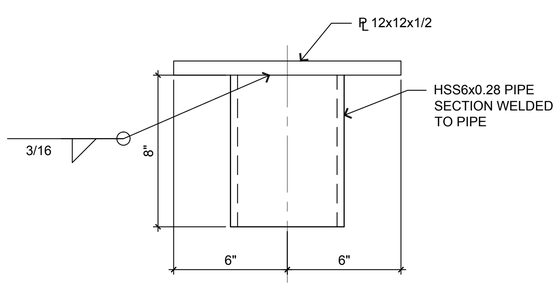

CAP FOR 6"Ø ASTM A53
GR. B PIPE PILES

NOTE:
CUT OFF PILE AT APPROPRIATE
ELEVATION IN FTG & HAMMER
CAP ONTO TOP OF PILE

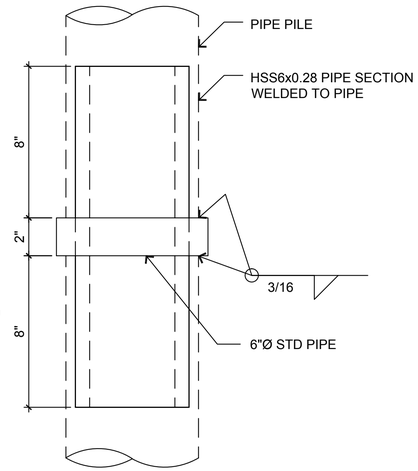

COUPLER FOR SPLICING
6"Ø ASTM A53 GR. B PIPE PILES

NOTE:
SPLICE PIPE PILES BY
HAMMERING COUPLER INTO
END OF SECTION

PILE CAP PLATE - 6" PIPE
3" = 1'-0"
4 S101 SD100

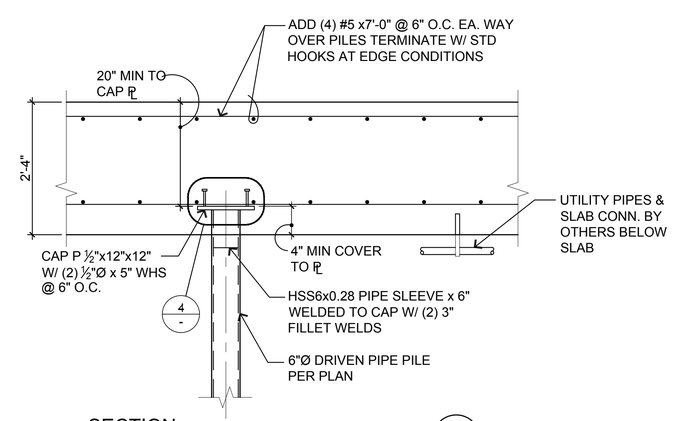

SECTION
3/4" = 1'-0"
5 S101 SD100

1/2" = 1'-0" 2' 1' 0 2' 4' 6'

3" = 1'-0" 6" 3" 0 3" 1'

PARTNERSHIP berger
1927 Post Alley, Ste. 2
Seattle, WA 98101
206 325 6877
bergerpartnership.com

INNOVA architects
950 Pacific Avenue, Suite 450
Tacoma, WA 98402

Totem Lake Park Phase 1
City of Kirkland
12031 Totem Lake Way, Kirkland, WA 98034

PAUL B. McCORMICK
STATE OF WASHINGTON
32191
PROFESSIONAL ENGINEER

SET TYPE:
Bid Set

SET ISSUE DATE:
09/13/2019

REVISIONS:

DRAWN/CHECKED:
SH DM

SHEET NAME:
DETAILS

SHEET NUMBER:
SD100

SHEAR WALL SCHEDULE (1)

MARK (3) (6) (8) (9)	SHEATHING (2) (11)	NAILING		STUD SIZE AT ADJOINING PANEL EDGES	BLOCKING SIZE (5)	FOUNDATION SILL ℞ SIZE	FOUNDATION SILL ℞ ATTACHMENT (4) (13) (14)	2x BOTTOM ℞ ATTACHMENT TO WOOD BELOW	REMARKS
		SIZE (1) (14)	SPACING (7) (10)						
3	15/32" APA RATED SHTG	10d COMMON (0.148" Ø x 23/4" MIN)	6" O.C. EDGES 12" O.C. FIELD	2x	2x FLAT	2x	3/4"Ø AT 48"O.C.	16d AT 6"OC STAGGERED	310 PLF

APA RATED SHEATHING SHEARWALL NOTES:

1. NAILS SHALL BE COMMON FROM AN AMERICAN OR CANADIAN MFR ONLY. MINIMUM NAIL PENETRATION INTO WOOD FRAMING SHALL BE 1 1/2" FOR 10d NAILS. NAIL DIAMETERS AND LENGTHS SHALL BE PER NOTE 6.1.3 SHEET S0.02.
2. APA RATED SHEATHING MATERIAL MAY BE EITHER PLYWOOD OR ORIENTED STRAND BOARD. SHEATHING MAY BE ORIENTED EITHER HORIZONTALLY OR VERTICALLY.
3. ALL WALLS ABOVE 8" C.M.U. WALLS WITHOUT DESIGNATION SHALL BE TYPE 3. WHERE THE SHEAR WALL HAS BEEN DESIGNATED ON THE PLANS TO EXTEND ALONG LENGTHS OF WALLS WITH PENETRATIONS, SHEATHING AND NAILING OF THAT TYPE SHALL BE REQUIRED ABOVE AND BELOW WALL OPENINGS. OTHERWISE, SHEATHING AND NAILING ABOVE AND BELOW OPENINGS MAY BE TYPE 2 .
4. ANCHOR BOLTS SHALL HAVE 6" MIN. EMBED. SEE DETAILS FOR TYPE OF CONNECTION REQUIRED. PROVIDE A MINIMUM OF (2) ANCHOR BOLTS PER PIECE, WITH ONE ANCHOR LOCATED NOT MORE THAN 12" OR LESS THAN 4" FROM EACH END OF EACH PIECE.
5. PANEL BLOCKING SHALL BE A 2X4 MIN OR 3X4 MIN PLACED FLAT, CENTERED ON THE JOINT AND SHALL BE REQUIRED AT ALL UNSUPPORTED PANEL EDGES.
6. WHEN THE SHEATHING IS REQUIRED ON ONE SIDE ONLY, PLACE ON THE SIDE OF THE SYMBOL. WHERE THE SHEATHING IS REQUIRED ON BOTH SIDES OF THE WALL, STAGGER THE PANEL JOINTS ON THE STUDS SUCH THAT JOINTS ON OPPOSITE SIDES OF THE WALL DO NOT FALL ON THE SAME STUD.
7. PROVIDE PANEL EDGE NAILING OF SHEATHING TO ALL COLUMNS WITH HOLDOWNS AND STUDS ATTACHED TO STEEL TUBE COLUMNS.
8. SHEARWALLS SHALL RUN CONTINUOUS THROUGH BREAKS CAUSED BY INTERSECTING WALLS.
9. UNLESS NOTED OTHERWISE, THE SHEARWALL DESIGNATION APPLIES TO FULL EXTENT OF WALL BETWEEN CORNERS OF WALLS.
10. NAIL SPACING APPLIES TO ALL STUDS, TOP AND BOTTOM PLATES AND BLOCKING.
11. MINIMUM SHEATHING DIMENSION SHALL BE 24" AT BOUNDARIES AND CHANGES IN FRAMING UNLESS ALL EDGES ARE BLOCKED.
12. AT NOTED WALLS FOUNDATION SILL PLATES AND ALL FRAMING MEMBERS RECEIVING EDGE NAILING FROM ABUTTING PANELS SHALL NOT BE LESS THAN A SINGLE 3-INCH NOMINAL MEMBER. A SINGLE 2x FOUNDATION SILL PLATE MAY BE USED (IN LIEU OF A 3x SILL PLATE) PROVIDED ANCHOR BOLT SPACING IS REDUCED TO 1/2 THE VALUE GIVEN ABOVE.
13. A 3" x 3" X 1/4" STEEL PLATE WASHER SHALL BE USED AT ALL SILL PLATE ATTACHMENT BOLTS.
14. HOT DIPPED GALVANIZED FASTENERS (ELECTROPLATED FASTENERS ARE NOT ACCEPTABLE) SHALL BE USED TO ATTACH TO ALL TREATED WOOD MEMBERS.
15. WHERE 3x AND 4x NOMINAL SILL PLATES ARE USED, (2) 20d BOX END NAILS SHALL BE SUBSTITUTED FOR (2) 16d COMMON NAILS REQUIRED BY NOTE 6.2 ON SHEET S0.01.

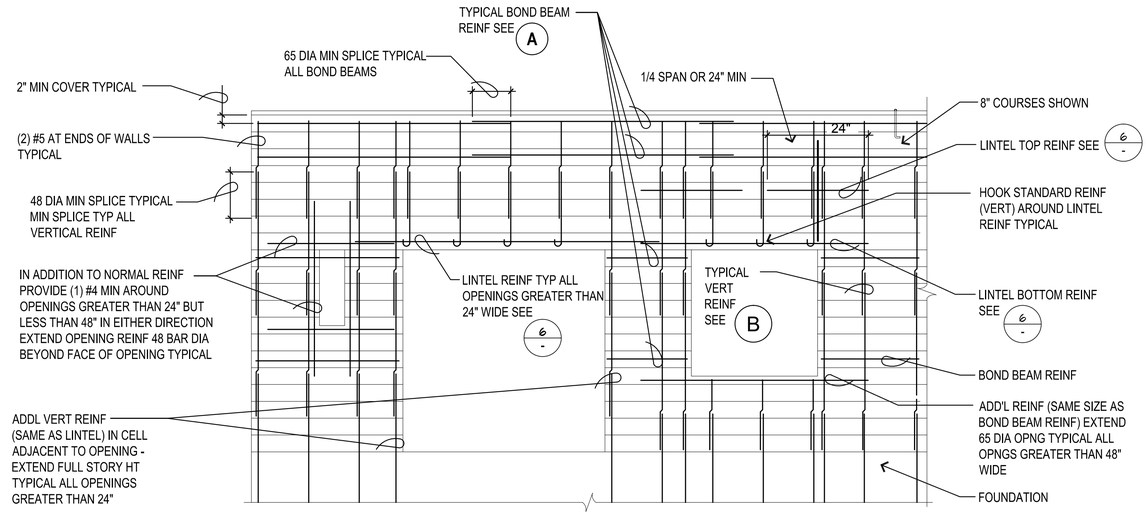

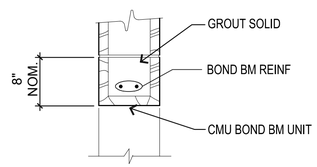

TYPICAL BOND BEAM (A)

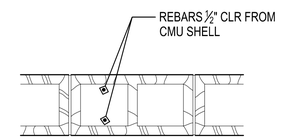

TYP PLACEMENT OF VERT REINF WHEN (2) BARS REQD (B)

NOTES :
1. TYPICAL REINFORCEMENT SHOWN USE MORE IF REQUIRED BY SPECIAL DETAIL
2. FOR CORNER BAR USE 30" 30" SAME SIZE AND SPACING AS TYP HORIZ REINF
3. HOOK ALL REINF THAT CANNOT BE EXTENDED
4. GROUT ALL CELLS CONTAINING REINF ANCHOR BOLTS OR OTHER EMBEDDED ITEMS
5. FOR CONTROL JOINTS IN CMU WALLS SEE 4 -

TYP MASONRY WALL EVEVATION (2)
3/4" = 1'-0" S201 SD101

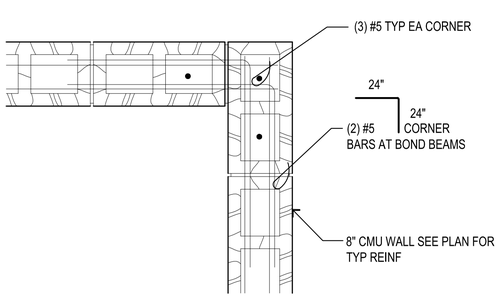

PLAN (3)
3/4" = 1'-0" S201 SD101

NOTE:
REFER TO ARCH. EXTERIOR ELEVATIONS FOR CONTROL JOINT PLACEMENT. INTERIOR 6" CMU WALL CONTROL JOINTS PLACEMENT BY CONTRACTOR

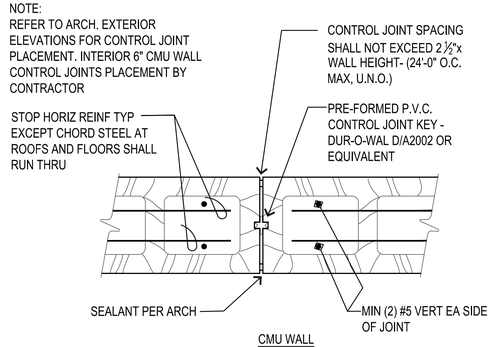

TYP MASONRY CONTROL JOINT (4)
3/4" = 1'-0" S201 SD101

MASONRY WALL SCHEDULE (5)

MARK*	TYPE*	HORIZ. REINF.	VERT. REINF.	REMARKS
1	8" CMU	(2) #5 AT 24" OC	#5 AT 24" OC	TYPICAL WALL

* MARKS SIGNIFY CMU WALL TYPE ABOVE FOUNDATIONS

NOTES
1. SEE SHEET S0.1 AND S0.2 FOR STRUCTURAL NOTES AND TYPICAL DETAILS.
2. VERIFY ALL WINDOW, LOUVER, AND DOOR WIDTHS, HEIGHTS AND LOCATIONS WITH ARCHITECTURAL.
3. SEE ARCHITECTURAL/MECHANICAL DRAWINGS FOR DRAINS, SLOPES, AND OTHER FLOOR DEPRESSIONS NOT SHOWN.
4. SEE ARCHITECTURAL DRAWINGS FOR DIMENSIONS, ELEVATIONS, AND WALLS NOT SHOWN.
5. SEE SOILS REPORT FOR FOUNDATION AND SLAB SUPPORT
6. T.O.F. = TOP OF FOOTING ELEVATION BELOW FINISH FLOOR ELEVATION.
7. GENERAL CONTRACTOR TO VERIFY TOP OF FOOTING ELEVATIONS WITH FINAL GRADING PLANS.
8. SEE ARCHITECTURAL DRAWING A1.2 FOR LOWER LOUVER OPENINGS NOT SHOWN.
9. PROVIDE SLAB CONTROL JOINTS AT 12'-6" O.C. MAX. PER PLAN. SEE DETAIL 1/S0.2

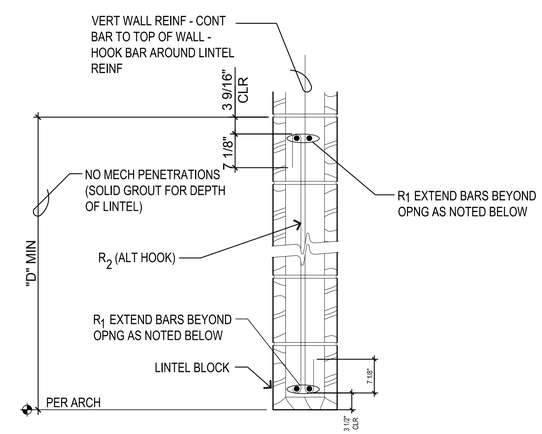

LINTEL SCHEDULE

TYPE	"D" (INCHES)	R_1	R_2	REMARKS
ML 1	16"	(2) # 5	NONE	EXTEND R_1 REINF 3'-0" BEYOND OPNG EA SIDE

TYP LINTEL DETAIL (6)
3/4" = 1'-0" S201 SD101

3/4" = 1' - 0" 12" 6" 0 1' 2'

PARTNERSHIP berger
1927 Post Alley, Ste. 2 Seattle, WA 98101
206 325 6877 bergerpartnership.com

INNOVA architects
950 Pacific Avenue, Suite 450 Tacoma, WA 98402

Totem Lake Park Phase 1
City of Kirkland
12031 Totem Lake Way, Kirkland, WA 98034

PAUL B. McCORMICK STATE OF WASHINGTON 32191 PROFESSIONAL ENGINEER

SET TYPE: Bid Set
SET ISSUE DATE: 09/13/2019
REVISIONS:
DRAWN/CHECKED: SH DM
SHEET NAME: DETAILS
SHEET NUMBER: SD101

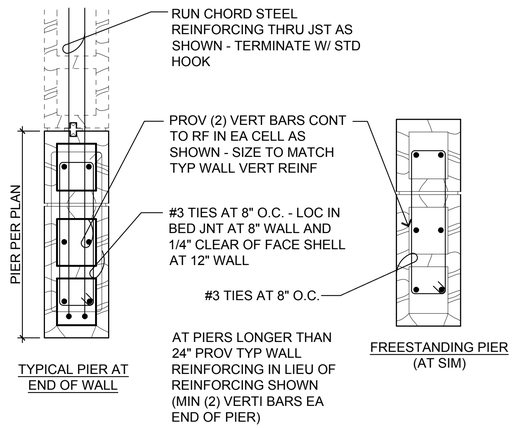

PLAN
3/4" = 1'-0"
1 S201 SD102

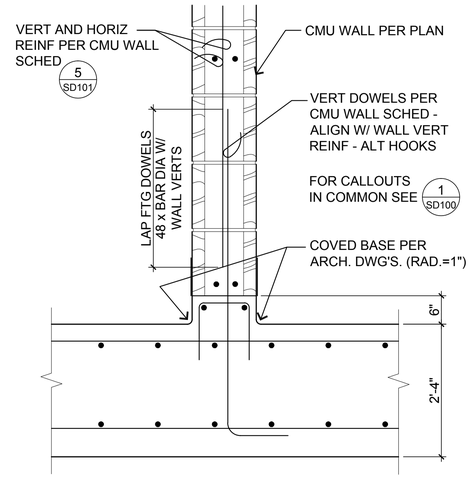

SECTION
3/4" = 1'-0"
2 S201 SD102

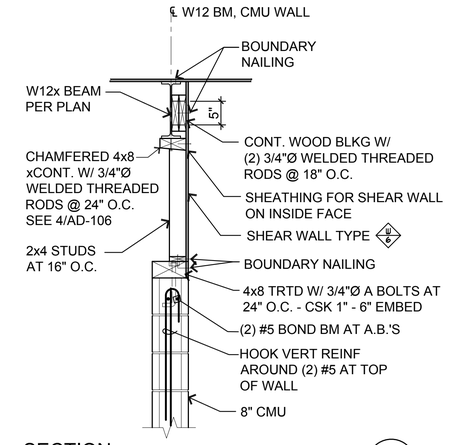

SECTION
3/4" = 1'-0"
3 S201 SD102

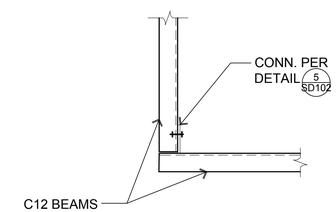

SECTION
1" = 1'-0"
6 S201 SD102

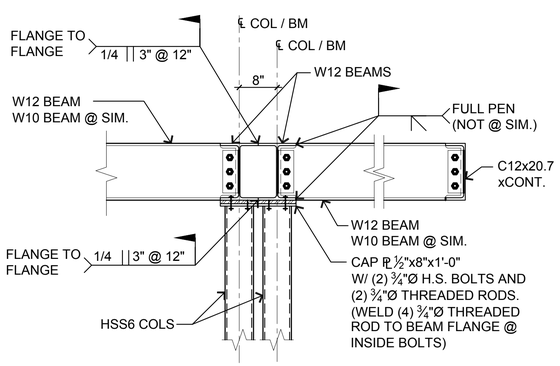

SUPPORTED BM SIZE	NUMBER OF A325-N
W 6x	1
W 8x	2
W 10x	2
W 12x	3

AT CONTRACTOR'S OPTION: BOLTS MAY BE LOCATED A STANDARD DISTANCE FROM TOP FLANGE OF BM (IN LIEU OF CENTERING CONNECTING PL ON BM WEB AS SHOWN)

NOTE:
A325-N BOLTS DO NOT REQUIRE PRETENSION AND MAY BE USED WITH THREADS INCLUDED IN THE SHEAR PLANE

BEAM SECTION
3/4" = 1'-0"
4 S201 SD102

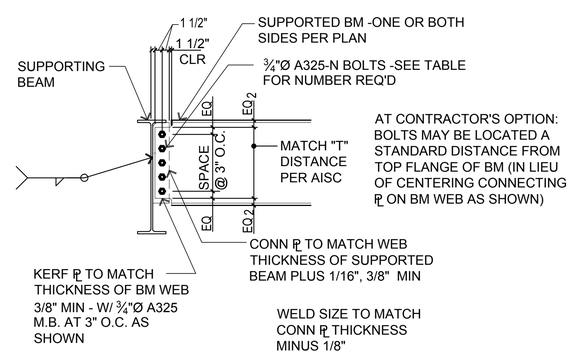

SUPPORTED BM SIZE	NUMBER OF A325-N
W 6x	1
W 8x	2
W 10x	2
W 12x	3

NOTE:
A325-N BOLTS DO NOT REQUIRE PRETENSION AND MAY BE USED WITH THREADS INCLUDED IN THE SHEAR PLANE

STEEL BEAM SECTION
3/4" = 1'-0"
5 S201 SD102

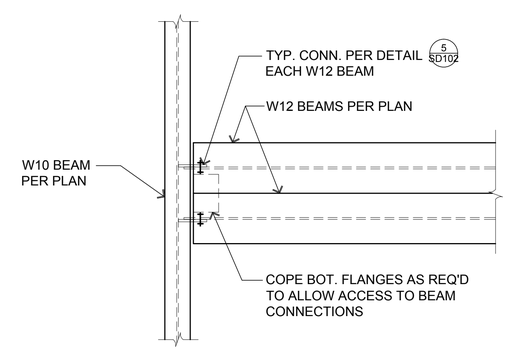

SECTION
1" = 1'-0"
7 S201 SD102

3/4" = 1' - 0" 12" 6" 0 1' 2'

1" = 1'-0" 1' 6" 0 2' 4'

PARTNERSHIP berger
1927 Post Alley, Ste. 2
Seattle, WA 98101
206 325 6877
bergerpartnership.com

INNOVA architects
950 Pacific Avenue, Suite 450
Tacoma, WA 98402

Totem Lake Park Phase 1
City of Kirkland
12031 Totem Lake Way, Kirkland, WA 98034

PAUL B. McCORMICK STATE OF WASHINGTON 32191 REGISTERED PROFESSIONAL ENGINEER

SET TYPE:
Bid Set

SET ISSUE DATE:
09/13/2019

REVISIONS:

DRAWN/CHECKED:
SH DM

SHEET NAME:
DETAILS

SHEET NUMBER:
SD102

ABBREVIATIONS

&	AND
@	AT
∠	ANGLE
AB	ANCHOR BOLT
AC	ACOUSTIC
A/C	AIR CONDITIONING
ACB	ACOUSTICAL CEILING BOARD
ACC	ACCESSIBLE
ACM	ASBESTOS CONTAINING MATERIAL
ACOUS	ACOUSTICAL
ACP	ACOUSTICAL CEILING PANEL
ACT	ACOUSTICAL CEILING TILE
ACU	AIR CONDITIONING UNIT
AD	AREA DRAIN, ACCESS DOOR
ADD	ADDENDUM, ADDITIVE
ADDL	ADDITIONAL
ADJ	ADJACENT, ADJUSTABLE
AF	ACCESS FLOOR
AFC	ACOUSTICAL FABRIC COVER
AFF	ABOVE FINISH FLOOR
AFG	ABOVE FINISH GRADE
AGG	AGGREGATE
ALUM	ALUMINUM
ALT	ALTERNATE
ANOD	ANODIZED
AP	ACCESS PANEL
APC	ACOUSTICAL PANEL CEILING
APPD	APPROVED
APPROX	APPROXIMATE (LY)
APT	APARTMENT UNIT
ARCH	ARCHITECTURE (URAL)
ASPH	ASPHALT
AVE	AVENUE
AWF	ACOUSTICAL WALL FABRIC
AWP	ACOUSTICAL WALL PANEL
B	BATH
BBQ	BARBEQUE
BD	BOARD
BF	BOTH FACES
BIT	BITUMEN
BITUM	BITUMINOUS
BLDG	BUILDING
BLK(G)	BLOCK (ING)
BM	BEAM, BENCH MARK
BO	BOTTOM OF
BOT	BOTTOM
BOW	BOTTOM OF WALL
BR	BRICK, BEDROOM
BRG	BEARING
BS	BACKSPLASH
BSMT	BASEMENT
BTWN	BETWEEN
BUR	BUILT-UP ROOFING
℄	CENTERLINE
CAB	CABINET, CEMENT ASBESTOS BOARD
CB	CATCH BASIN
CBU	CEMENTIOUS BACKER UNITS
C/C	CENTER TO CENTER
CD	CUP DISPENSER
CEM	CEMENT
CER	CERAMIC
CF	CUBIC FEET
CFCI	CONTRACTOR FINISHED/CONTRACTOR INSTALLED
CFM	CUBIC FEET PER MINUTE
CFT	CONDUCTIVE FLOOR TILE
CG	CORNER GUARD
CHAN	CHANNEL
CHBD	CHALKBOARD
CI	CAST IRON
CIP	CAST IN PLACE
CJ	CONTROL JOINT
CLF	CHAIN LINK FENCE
CLG	CEILING
CLK	CAULKING
CLO	CLOSET
CLR	CLEAR (ANCE)
CMU	CONCRETE MASONRY UNIT
CO	CLEAN OUT
COL	COLUMN
CONC	CONCRETE
CONN	CONNECTION
CONST	CONSTRUCTION
CONT	CONTINUOUS
COORD	COORDINATE
CORR	CORRIDOR
CPT	CARPET (ED)
CRS	COURSE (ES)
CS	CONCRETE SEALER
CT	CERAMIC TILE
CTCS	CERAMIC TILE CORNER SHELF
CTR	COUNTER
CTSD	CERAMIC TILE CORNER DISH
CTSK	COUNTER SINK
CTV	CABLE TELEVISION
CU	CUBIC
CW	COLD WATER
C/W	COMPLETE WITH
CWB	CAPILLARY WATER BARRIER
CY	CUBIC YARD(S)
d	PENNY NAILS
D	DEEP, DEPTH, DRYER
DBL	DOUBLE
DEMO	DEMOLITION, DEMOLISH
DEP	DEPRESSED
DEPT	DEPARTMENT
DET, DTL	DETAIL
DF	DRINKING FOUNTAIN
D FIR	DOUGLAS FIR
DI	DUCTILE IRON, DEIONIZED WATER
DIA, Ø	DIAMETER
DIAG	DIAGONAL
DIM	DIMENSION
DIM PT	DIMENSION POINT
DISP	DISPOSAL
DL	DEAD LOAD
DMPF	DAMPPROOFING
DN	DOWN
DPR	DAMPER
DR	DOOR
DS	DOWNSPOUT
DV	DRYER VENT
DW	DISHWASHER
DWG	DRAWING
E	EAST
EA	EACH
EB	EXPANSION BOLT
EF	EACH FACE, EXHAUST FAN
EFS	EXTERIOR FINISH SYSTEM
EIFS	EXTERIOR INSULATION & FINISH SYSTEM
EJ	EXPANSION JOINT
ELEC	ELECTRIC (AL)
EL	ELEVATION
ELEV	ELEVATOR, ELEVATION
EM	ENTRY MAT
EN	ENAMEL
ENCL	ENCLOSURE
EOS	EDGE OF SLAB
EP	ELECTRICAL PANEL (BOARD)
EPNT	EPOXY PAINT
EPX	EPOXY
EQ	EQUAL, EQUALLY
EQUIP	EQUIPMENT
ES	EACH SIDE
EST	ESTIMATE (ED)
EW	EACH WAY
EWC	ELECTRIC WATER COOLER
EX	EXPANSION
EXC	EXCAVATE
EXH	EXHAUST
EXIST, (E)	EXISTING
EXP	EXPANSION
EXT	EXTERIOR
FA	FIRE ALARM
FBD	FIBERBOARD
FBO	FURNISHED BY OTHERS
FD	FLOOR DRAIN
FDN	FOUNDATION
FE	FIRE EXTINGUISHER
FEC	FIRE EXTINGUISHER & CABINET
F/F	FACE TO FACE
FF	FACTORY FINISH, FINISH FLOOR
FF&E	FURNITURE, FIXTURES & EQUIPMENT
FGL	FIBERGLASS
FH	FIRE HYDRANT
FHC	FIREHOSE CABINET
FIN	FINISH (ED)
FL	FLOOR (ING)
FLUOR	FLUORESCENT
FM	FACTORY MUTUAL
FND	FEMININE NAPKIN DISPOSAL
FNV	FEMININE NAPKIN VENDOR
FO, F/O	FACE OF
FOC	FACE OF CONCRETE OR CMU
FOF	FACE OF FINISH
FOIC	FURNISHED BY OWNER/INSTALLED BY CONTRACTOR
FOIO	FURNISHED BY OWNER/INSTALLED BY OWNER
FOM	FACE OF MASONRY
FOS	FACE OF STUD, FACE OF SLAB
FP	FIREPLACE
FPRF	FIREPROOFING
FPWH	FREEZE PROOF WALL HYDRANT
FR	FIRE-RESISTIVE
FRC	FIBER REINFORCED CONCRETE
FRG	FIBER REINFORCED GYPSUM
FRP	FIBERGLASS REINFORCED PLASTIC
FRT	FIRE RETARDANT TREATED
FS	FLOOR SINK
FT	FOOT, FEET
FTG	FOOTING
FURR	FURRING, FURRED
FUT	FUTURE
FWC	FABRIC WALL COVERING
G	GAS
GA	GAUGE
GAL	GALLON
GALV	GALVANIZED
GB	GRAB BAR
GC	GENERAL CONTRACTOR
GCMU	GLAZED CONCRETE MASONRY UNIT
GD	GARBAGE DISPOSAL
GFCI	GROUND FAULT CIRCUIT INTERRUPTOR
	GOVERNMENT FURNISHED, CONTRACTOR INSTALLED
GFGI	GOVERNMENT FURNISHED, GOVERNMENT INSTALLED
GFRC	GLASS FIBER REINFORCED CONCRETE
GL	GLASS, GLAZING
GLU-LAM	GLUE-LAMINATED
GND	GROUND
GPM	GALLONS PER MINUTE
GR	GRADE
GRGL	GLARE REDUCING GLASS (GLAZING)
GS	GALVANIZED STEEL
GSB	GYPSUM SHEATHING BOARD, GYPSUM SOFFIT BOARD
GSF	GROSS SQUARE FOOT(AGE)
GSL	GYPSUM SHAFT LINER
GVP	GYPSUM VENEER PLASTER
GWB	GYPSUM WALL BOARD
GYP	GYPSUM
GYP SHTG	GYPSUM SHEATHING
H	HIGH
HB	HOSE BIB
HBGC	HIGH BUILD GLAZE COATING
HC	HANDICAP, HOLLOW CORE
HCT	HOLLOW CLAY TILE
HD	HAND DRYER, HAIR DRYER
HDOL	HIGH DENSITY OVERLAID
HDR	HEADER
HDWD	HARDWOOD
HDWR	HARDWARE
HIWC	HIGH IMPACT WALL COVERING
HM	HOLLOW METAL
HO	HOLD-OPEN
HORIZ	HORIZONTAL
HP	HYDRO POOL
HR	HOUR, HANDRAIL
HRC	HOSE REEL CABINET
HRSF	HIGH RATE SAND FILTER
HT	HEIGHT
HTG	HEATING
HVAC	HEATING/VENTILATION/AIR CONDITIONING
HW	HOT WATER
HWT	HOT WATER TANK
HWD	HOT WATER DISPENSER
ID	INSIDE DIMENSION, INSIDE DIAMETER
IE	INVERT ELEVATION
IG	INSULATED GLASS
IN	INCH
INCL	INCLUDE (D, ING)
INFO	INFORMATION
INSUL	INSULATE(D), (ION)
INT	INTERIOR
INV	INVERT
IPS	IRON PIPE SIZE
JAN	JANITOR
JST	JOIST
JT	JOINT
JB	JUNCTION BOX
K, KIT	KITCHEN
KD	KILN DRIED
KDF	KNOCK DOWN FRAME
KO	KNOCK-OUT
KP	KICKPLATE
KS	KNEE SPACE
L	LONG, LENGTH, LEFT
LAM	LAMINATE
LAV	LAVATORY
LB	LAG BOLT
LBS, #	POUNDS
LF	LINEAL FOOT/FEET
LG	LENGTH, LONG
LH	LEFT HAND
LHR	LEFT HAND REVERSE
LKR	LOCKER
LL	LIVE LOAD
LMS	LIQUID MARKING SURFACE
LPT	LOW POINT
LRH	LIGHT REFLECTIVE HARDNER
LSD	LIQUID SOAP DISPENSER
LT	LIGHT
LTG	LIGHTING
LVR	LOUVER
LWC	LIGHTWEIGHT CONCRETE
MACH	MACHINE
MAS	MASONRY
MAT	MATERIAL
MAX	MAXIMUM
MB	MACHINE BOLT
MC	MEDICINE CABINET
MDF	MEDIUM DENSITY FIBERBOARD
MDO	MEDIUM DENSITY OVERLAY
MECH	MECHANICAL
MEMB	MEMBRANE
MET	METAL
MFR	MANUFACTURER
MIN	MINIMUM
MISC	MISCELLANEOUS
MTL	METAL
MEZZ	MEZZANINE
MFR	MANUFACTURER
MH	MANHOLE
MIR	MIRROR
MJ	MACHINE JOLT
MLD	MOLDING
MO	MASONRY OPENING
MOD	MODIFIED
MR	MOISTURE RESISTANT
MTD	MOUNTED
MULL	MULLION
MW	MICROWAVE OVEN
N	NORTH
(N)	NEW
N/A	NOT APPLICABLE
NAT	NATURAL
N/C	NONCOMBUSTIBLE
NFS	NON-FROST SUSCEPTIBLE
NFVA	NET FREE VENT AREA
NIC	NOT IN CONTRACT
NO, #	NUMBER
NOM	NOMINAL
NP	NOT PROVIDED
NR	NONRATED
NRC	NOISE REDUCTION COEFFICIENT
NSF	NET SQUARE FEET
NTS	NOT TO SCALE
O	OVER
O/O	OUT TO OUT
OA	OVERALL
OBS	OBSCURE
OC	ON CENTER
OD	OUTSIDE DIMENSION, OVERFLOW DRAIN
OF	OUTSIDE FACE
OFCI	OWNER FURNISHED/CONTRACTOR INSTALLED
OFOI	OWNER FURNISHED/OWNER INSTALLED
OFF	OFFICE
OH	OVERHEAD
ORD	OVERFLOW ROOF DRAIN
OPNG	OPENING
OPP	OPPOSITE
OR	OUTSIDE RADIUS
OS	OUTSIDE
OSB	ORIENTED STRAND BOARD
OTS	OPEN TO STRUCTURE
ℙ	PROPERTY LINE
P	POWER
PA	PUBLIC ADDRESS
PAR	PARALLEL
PB	PANIC BAR
PBD	PARTICLEBOARD
PC	PRECAST, POINT OF CURVE
PCD	PAPER CUP DISPENSER
PERF	PERFORATED
PERP	PERPENDICULAR
PF	PREFABRICATED
PI	POINT OF INTERSECTION
PJ	PANEL JOINT
PL	PLATE
PLAM	PLASTIC LAMINATE
PLAS	PLASTER
PLYWD	PLYWOOD
PNL	PANEL
PNT	PAINT
POC	POINT OF CONNECTION
POL	POLISHED
POLY	POLYETHYLENE
PP	POWER POLE
PR	PAIR
PRCST	PRECAST
PREFAB	PREFABRICATED
PROP	PROPERTY
PSF	POUNDS PER SQUARE FOOT
PSI	POUNDS PER SQUARE INCH
PSL	PARALLEL STRAND LUMBER
PT	POINT, PRESSURE TREAT (ED)
PTD	PAPER TOWEL DISPENSER
PTD/WR	PTD & WASTE RECEPTACLE
PTN	PARTITION
PTR	PAPER TOWEL RECEPTACLE
PVC	POLYVINYL CHLORIDE
PVMT	PAVEMENT
PW	POTABLE WATER
PWT	PREFABRICATED WOOD TRUSS
QUAN	QUANTITY
QT	QUARRY TILE
R	RISER, RADIUS, THERMAL RESISTANCE
RA	RETURN AIR
RAD, R	RADIUS
RB	RUBBER BASE, RESILIENT BASE
RD	ROOF DRAIN, ROAD
RD/O	ROOF DRAIN OVERFLOW
REBAR	REINFORCING BAR
REC	RECESSED
RECP	RECEPTACLE
RECT	RECTANGULAR
REF	REFERENCE
REFR	REFRIGERATOR
REG	REGISTER
REINF	REINFORCE (ED, ING)
REQ'D	REQUIRED
REQ'T	REQUIREMENT
RESIL	RESILIENT
RET	RETAINING
REV	REVISION
RFG	ROOFING
RH	RIGHT HAND, RELATIVE HUMIDITY, ROBE HOOK
RHR	RIGHT HAND REVERSE
RL	RAIN LEADER
RM	ROOM
RO	ROUGH OPENING
ROW	RIGHT OF WAY
R&S	ROD & SHELF
R&R	REMOVE & REPLACE
RR	RAILROAD
RS	ROUGH SAWN
RT	RESILIENT TILE
RUB	RUBBER
RV	RANGE VENT
RWL	RAIN WATER LEADER
S	SLOPE, SOUTH
SAN	SANITARY SEWER
SC	SOLID CORE
SCWD	SOLID CORE WOOD
SCD	SEAT COVER DISPENSER
SCHED	SCHEDULE
SCR	SHOWER CURTAIN ROD
SD	SOAP DISPENSER, STORM DRAIN, SMOKE DETECTOR
SECT	SECTION
SF	SQUARE FOOT/FEET
SG	SAFETY GLAZING
SH	SHOWER
SHT	SHEET
SHTG	SHEATHING
SIM	SIMILAR
SK	SINK
SLR	SEALER
SLV	SLEEVE
SM	SHEET METAL, SHOWER MODULE
SMHC	SHOWER MODULE HANDICAPPED
S/MH	SHELF/MOP HOLDER
SMR	SURFACE METAL RACEWAY
SND	SANITARY NAPKIN DISPENSER, SANITARY NAPKIN DISPOSAL
SOG	SLAB ON GRADE
SOV	SHUT OFF VALVE
SP	STANDPIPE, SOLID PLASTIC
SPEC	SPECIFICATION (S)
SQ	SQUARE
SR	SEMI-RECESSED
SS	SANITARY SEWER, STAINLESS STEEL
SSK	SERVICE SINK
SSM	SOLID SURFACE MATERIAL
SST	STAINLESS STEEL
SSV	SAND STAIN VARNISH
ST	STAIN, STONE, STREET
STC	SOUND TRANSMISSION CLASS
STD	STANDARD
STL	STEEL
STOR	STORAGE
STFT	STORE FRONT
STRUCT	STRUCTURAL
SURF	SURFACE
SV	SHEET VINYL
S/V	STAIN & VARNISH
SWL	STATIC WATER LEVEL
SWR	SEWER
SYM	SYMMETRICAL
T, TR	TREAD
TB	TOWEL BAR
T&B	TOP & BOTTOM
TD	TOWEL DISPENSER
TEL	TELEPHONE
TER, TZ	TERRAZZO
TESC	TEMPORARY EROSION & SEDIMENTATION CONTROL
TFCI	TENANT FURNISHED/ CONTRACTOR INSTALLED
T&G	TONGUE & GROOVE
TG	TEMPERED GLASS
THK	THICK (NESS)
TKBD	TACKBOARD
TO	TOP OF
TOB	TOP OF BEAM
TOC	TOP OF CURB, TOP OF CONCRETE, TOP OF COLUMN
TOF	TOP OF FOUNDATION
TOM	TOP OF MASONRY
TOP	TOP OF PAVEMENT, TOP OF PLATE
TOS	TOP OF SLAB
TOW	TOP OF WALL
TPD	TOILET PAPER DISPENSER
TPTN	TOILET PARTITION
TRAN	TRANSPARENT
TS	TUBE STEEL
TTD	TOILET TISSUE DISPENSER
TTH	TOOTHBRUSH HOLDER
TV	TELEVISION
TWC	TEXTILE WALL COVERING
TYP	TYPICAL
UC	UNDERCUT
U/C	UNDER COUNTER
UG	UNDERGROUND
UL	UNDERWRITERS LABORATORIES
UNF	UNFINISHED
UNO	UNLESS NOTED OTHERWISE
UR	URINAL
UV	ULTRA VOILET
UFAS	UNIFORM FEDERAL ACCESSIBILITY STANDARDS
V	VENT
VAR	VARIES
VAT	VINYL ASBESTOS TILE
VCT	VINYL COMPOSITION TILE
VENT	VENTILATOR
VERT	VERTICAL
VEST	VESTIBULE
VG	VERTICAL GRAIN
VIN	VINYL
VR	VAPOR RETARDER
VTR	VENT THROUGH ROOF
VWC	VINYL WALL COVERING
W	WATER, WEST, WIDE, WIDTH, WASHER
W/	WITH
WB	WALL BASE, WASTE BASKET
WC	WATER CLOSET, WALL COVERING
WD	WOOD
WF	WIDE FLANGE
WG	WIRE GLASS
WH	WATER HEATER, WALL HUNG
W/I	WITHIN
WIN	WINDOW
WM	WIRE MESH
W/O	WITHOUT
WP	WATER PROOF, WORKING POINT
WPL	WEATHER PROOF LOUVER
WR	WASTE RECEPTACLE, WATER RESISTANT
WR/GWB	WATER RESISTANT GWB
WS	WEATHER STRIPPING, WATER STOP
WSCT	WAINSCOT
WT	WEIGHT, WATER TANK
W/W	WALL TO WALL
WWF	WELDED WIRE FABRIC
X BRACE	CROSS BRACE
YD	YARD, YARD DRAIN

SYMBOLS

NORTH	PROJECT NORTH (PLAN REFERENCE ONLY - SEE SURVEY FOR TRUE NORTH)
1 / A6 A8	SECTION CUT/ ELEVATION NUMBER OR LETTER
	SHEET DRAWN
	SHEET TAKEN
1 / A6 A8	DETAIL NUMBER
	SHEET DRAWN
	SHEET TAKEN
A / D B / C / A6 A8	ELEVATION LETTER
	SHEET DRAWN
	SHEET TAKEN
1	LOUVER TYPE
A	GLAZING TYPE
1	WALL TYPE
1	DEMO FLAG NOTE
12	WORK FLAG NOTE
13.5	GRID LINE
101	DOOR NUMBER
KITCHEN 113	ROOM IDENTIFICATION NUMBER
UP/DN	STAIR OR SLOPE DIRECTION
	CHAIN LINK FENCE
	ELEVATION INDICATOR
VINYL CPT	FLOOR MATERIAL INDICATOR

REFER TO INDIVIDUAL DISCIPLINE SHEETS FOR ADDITIONAL SYMBOLS AND ABBREVIATIONS

MATERIAL DESIGNATION

	EXISTING WALLS TO REMAIN
	WALLS OR ITEMS TO BE REMOVED (DASHED)
	NEW STUD WALLS
	NEW BRICK OR CMU WALLS
	CONCRETE
	EARTH
	FILL MATERIAL
	GYPSUM WALLBOARD (LARGE SCALE)
	CEMENT FIBER BOARD / SIDING (LARGE SCALE)
	CONTINUOUS BLOCKING
	NON-CONTINUOUS BLOCKING

PARTNERSHIP berger
1927 Post Alley, Ste. 2 Seattle, WA 98101
206 325 6877 bergerpartnership.com

INNOVA architects
950 Pacific Avenue, Suite 450
Tacoma, WA 98402
253-572-4903

Totem Lake Park Phase 1
City of Kirkland
12031 Totem Lake Way, Kirkland, WA 98034

8404 REGISTERED ARCHITECT GEOFFREY E. ANDERSON STATE OF WASHINGTON

_SET TYPE:
Bid Set

_SET ISSUE DATE:
9/13/2019

_REVISIONS:

Δ	DESCRIPTION	DATE

_DRAWN/CHECKED:
GO GEA

_SHEET NAME:
ABBREVIATIONS & SYMBOLS

_SHEET NUMBER:
A000

Berger Partnership Project Number: XXXXXXXX.XX Plotted: 08.18.2011 5:18 PM By: Gennadiy Ogay Filename: p:\2017\17-116 totem lake splash pad (berger)\drawings\acad-totem lake park-ph1 - title block.dwg

DOOR SCHEDULE

DOOR								FRAME			DETAIL				
NO.	TYPE	WIDTH	HEIGHT	THICK	MAT	FIN	FIRE RATING	TYPE	MAT	FIN	HEAD	JAMB	SILL	HDWRE	REMARKS
01	1	3'-0"	7' - 0"	1 3/4"	HM	PNT		A	HM	PNT	1/A001	1/A001 SIM	2/A001		
02	1	3'-0"	7' - 0"	1 3/4"	HM	PNT		A	HM	PNT	1/A001	1/A001 SIM	2/A001		
03	1	3'-0"	7' - 0"	1 3/4"	HM	PNT		A	HM	PNT	1/A001	1/A001 SIM	2/A001		OVERHEAD STOP SET TO PREVENT SWING FROM HITING STEEL COLUMNS
04	1	3'-0"	7' - 0"	1 3/4"	HM	PNT		A	HM	PNT	1/A001	1/A001 SIM	2/A001		OVERHEAD STOP SET TO PREVENT SWING FROM HITING STEEL COLUMNS

FINISH SCHEDULE

NO.	ROOM NAME	FLOOR MAT	FLOOR FIN	BASE	WALL MAT	WALL FIN	CEILING MAT	CEILING FIN	CEILING HEIGHT	REMARKS
01	RESTROOM I	CONC	SLR	COVE	CMU	FRP/ SLR	IPE	SLR	VARIES	INTEGRAL COVE BASE AT CONCRETE CURB, PROVIDE LIGHT BROOM FINISH ON FLOOR
02	RESTROOM II	CONC	SLR	COVE	CMU	FRP/ SLR	IPE	SLR	VARIES	INTEGRAL COVE BASE AT CONCRETE CURB, PROVIDE LIGHT BROOM FINISH ON FLOOR
03	RESTROOM III	CONC	SLR	COVE	CMU	FRP/ SLR	IPE	SLR	VARIES	INTEGRAL COVE BASE AT CONCRETE CURB, PROVIDE LIGHT BROOM FINISH ON FLOOR
04	JANITOR/ UTILITY/ STORAGE	CONC	SLR	COVE	CMU	FRP/ SLR	IPE	SLR	VARIES	INTEGRAL COVE BASE AT CONCRETE CURB, PROVIDE LIGHT BROOM FINISH ON FLOOR

SCHEDULE ABBREVIATIONS

CMU	CONCRETE MASONRY UNIT
CONC	CONCRETE
FF	FACTORY FINISH
FRP	FIBERGASS REINFORCED PLASTIC
HM	HOLLOW METAL
IPE	IPE WOOD SOFFIT BOARD
LB	LIGHT BROOM
PNT	PAINT
MFR	MANUFACTURER
SLR	SEALER
SST	STAINLESS STEEL

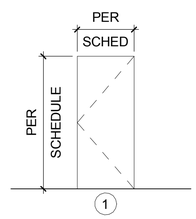

DOOR TYPES

1/4" = 1'-0"

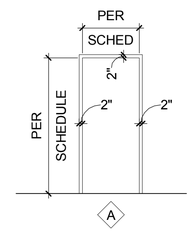

FRAME TYPES

1/4" = 1'-0"

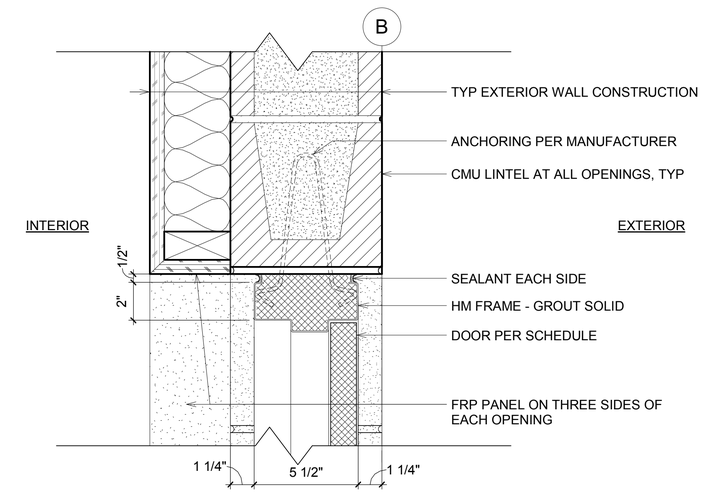

DOOR HEAD/ JAMB SIM.

3" = 1'-0"

1 AD105 A001

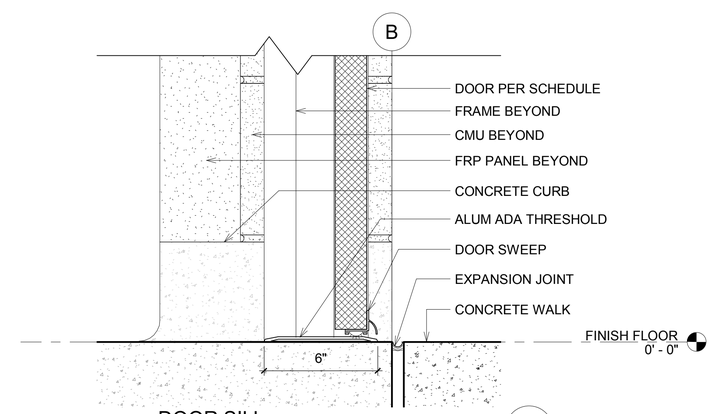

DOOR SILL

3" = 1'-0"

2 AD105 A001

9" 6" 0 3" 1'

3" = 1'-0"

RESTROOM BUILDING DESCRIPTION:

CONSTRUCT AN APPROXIMATELY 440 SF RESTROOM BUILDING FOR THE TOTEM LAKE PARK. THERE SHALL BE 3 INDIVIDUAL UNISEX RESTROOM, AND A UTILITY/JANITOR/SERVICE ROOM. THE CORE BUILDING IS CMU, WITH TRANSOM GLAZING WITH A LARGE OVERHANGING ROOF SUPPORTED BY STEEL COLUMNS. THE BUILDING IS HEATED.

TOTAL FLOOR AREA: 440 SF, 1-STORY (5,500 ALLOWABLE)

BUILDING OCCUPANCY: U

CONSTRUCTION TYPE: V-B

WSEC REQUIREMENTS:

- SUBMIT AIR BARRIER TEST REPORT TO JURISDICTION ONE TEST IS COMPLETE.
- IF TEST RESULTS EXCEED 0.40 CFM/FT2 AT 0.3 IN. WG, THEN VISUALLY INSPECT AIR BARRIER AND SEAL NOTED SOURCES OF LEAKAGE.
- SUBMIT A FOLLOW-UP REPORT TO JURISDICTION NOTING CORRECTIVE MEASURES TAKEN.
- INCLUDE AIR BARRIER TEST REPORT IN COMPLIANCE DOCUMENTATION PROVIDED TO BUILDING OWNER.
- PROJECT CLOSE-OUT DOCUMENTATION IS REQUIRED, INCLUDING APPLICABLE WSEC ENVELOPE COMPLIANCE FORMS AND CALCULATIONS, AND FENESTRATION NFRC RATING CERTIFICATES.

PARTNERSHIP berger
1927 Post Alley, Ste. 2
Seattle, WA 98101
206 325 6877
bergerpartnership.com

INNOVA architects
950 Pacific Avenue, Suite 450
Tacoma, WA 98402
253-572-4903

Totem Lake Park Phase 1

City of Kirkland

12031 Totem Lake Way, Kirkland, WA 98034

8404 REGISTERED ARCHITECT GEOFFREY E. ANDERSON STATE OF WASHINGTON

SET TYPE:
Bid Set

SET ISSUE DATE:
9/13/2019

REVISIONS:

Δ	DESCRIPTION	DATE

DRAWN/CHECKED:
SES, GO GEA

SHEET NAME:
SCHEDULES, DOOR & FRAME TYPES

SHEET NUMBER:
A001

Berger Partnership Project Number: XXXXXXXX.XX Plotted: 08.18.2011 5:18 PM By: Gennadiy Ogay Filename: p:\2017\17-116 totem lake splash pad (berger)\drawings\acad-totem lake park-ph1 - title block.dwg

GENERAL NOTES:

- THIS PLAN DEPICTS THE 6" HEIGHT CONCRETE WALLS. THE INTENT IS TO CREATE A UNIFORM BASE AT ALL THE WALLS WITH A COVED TRANSITION TO THE FLOOR OF WET AREAS FOR SANITARY PURPOSES.
- SLOPE ALL FLOORS 1/4" PER FOOT MIN. TO FLOOR DRAINS.

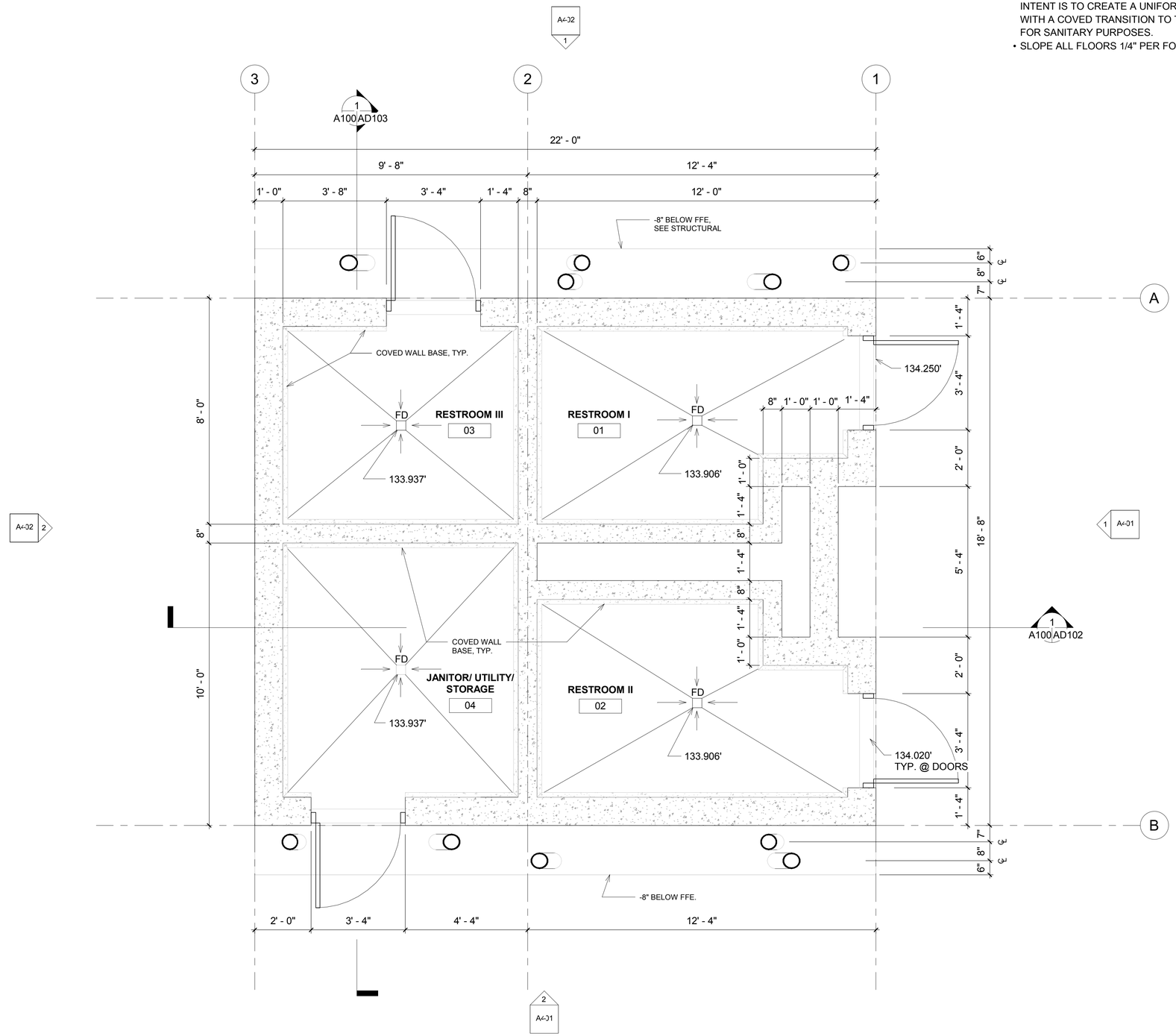

CONCRETE SLAB/CURB PLAN

1/2" = 1'-0"

1 A001 A100

PARTNERSHIP berger
1927 Post Alley, Ste. 2
Seattle, WA 98101
206 325 6877
bergerpartnership.com

INNOVA architects
950 Pacific Avenue, Suite 450
Tacoma, WA 98402
253-572-4903

Totem Lake Park Phase 1

City of Kirkland

12031 Totem Lake Way, Kirkland, WA 98034

8404 REGISTERED ARCHITECT GEOFFREY E. ANDERSON STATE OF WASHINGTON

SET TYPE:
Bid Set

SET ISSUE DATE:
9/13/2019

REVISIONS:

Δ	DESCRIPTION	DATE

DRAWN/CHECKED:
GO GEA

SHEET NAME:
SLAB/CURB PLAN

SHEET NUMBER:
A100

Berger Partnership Project Number: XXXXXXXX.XX Plotted: 08.18.2011 5:18 PM By: Gennadiy Ogay Filename: p:\2017\17-116 totem lake splash pad (berger)\drawings\acad-totem lake park-ph1 - title block.dwg

GENERAL NOTES:

- SEE AD105 FOR WALL TYPE NOTES

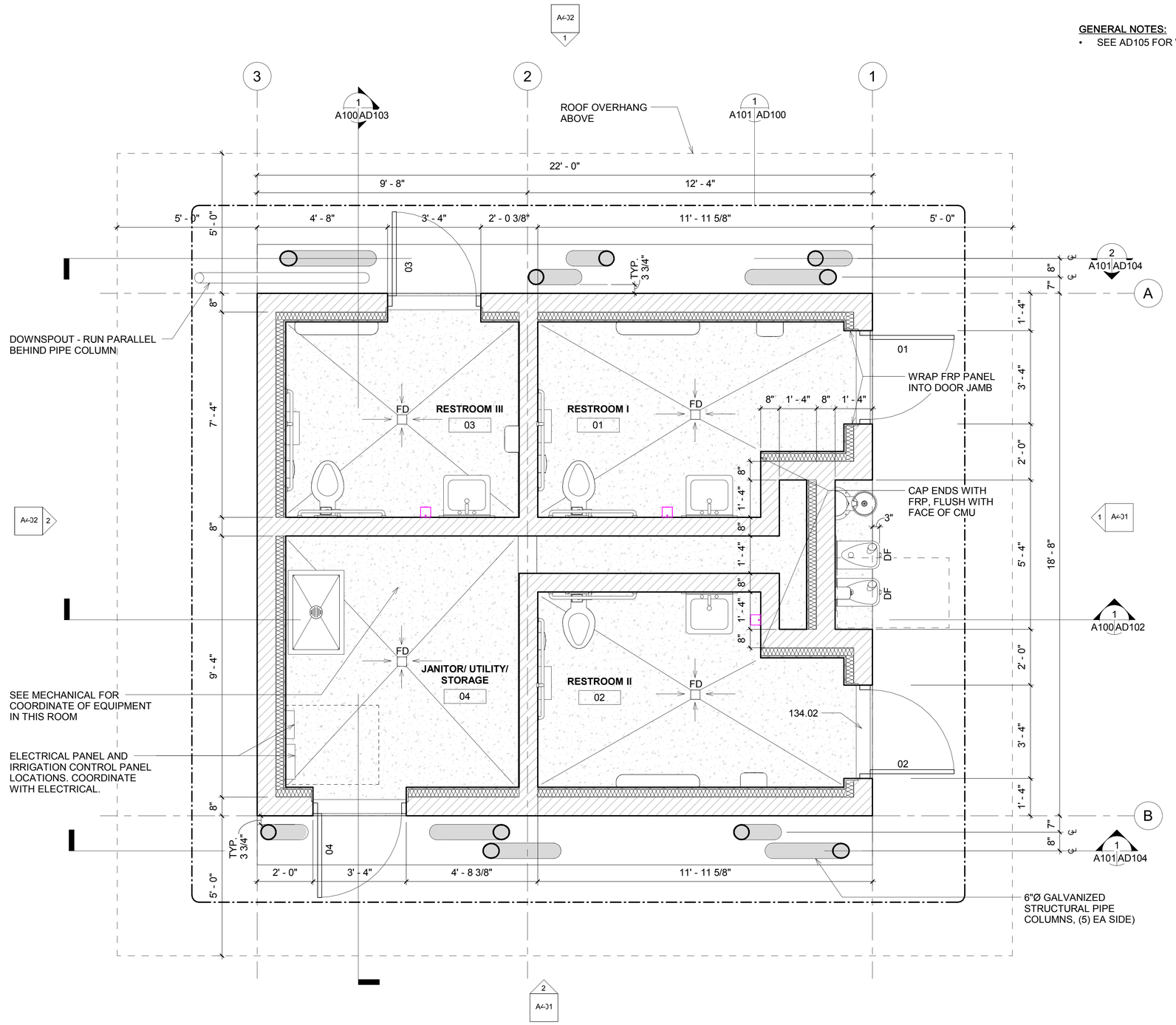

FLOOR PLAN

1/2" = 1'-0"

1 A101

NORTH

2' 1' 0 2' 4' 6'

1/2" = 1'-0"

PARTNERSHIP berger
1927 Post Alley, Ste. 2
Seattle, WA 98101
206 325 6877
bergerpartnership.com

INNOVA architects
950 Pacific Avenue, Suite 450
Tacoma, WA 98402
253-572-4903

Totem Lake Park Phase 1

City of Kirkland

12031 Totem Lake Way, Kirkland, WA 98034

8404 REGISTERED ARCHITECT GEOFFREY E. ANDERSON STATE OF WASHINGTON

SET TYPE:
Bid Set

SET ISSUE DATE:
9/13/2019

REVISIONS:

Δ	DESCRIPTION	DATE

DRAWN/CHECKED:
GO GEA

SHEET NAME:
BUILDING PLAN

SHEET NUMBER:
A101

Berger Partnership Project Number: XXXXXXXX.XX Plotted: 08.18.2011 5:18 PM By: Gennadiy Ogay Filename: p:\2017\17-116 totem lake splash pad (berger)\drawings\acad-totem lake park-ph1 - title block.dwg

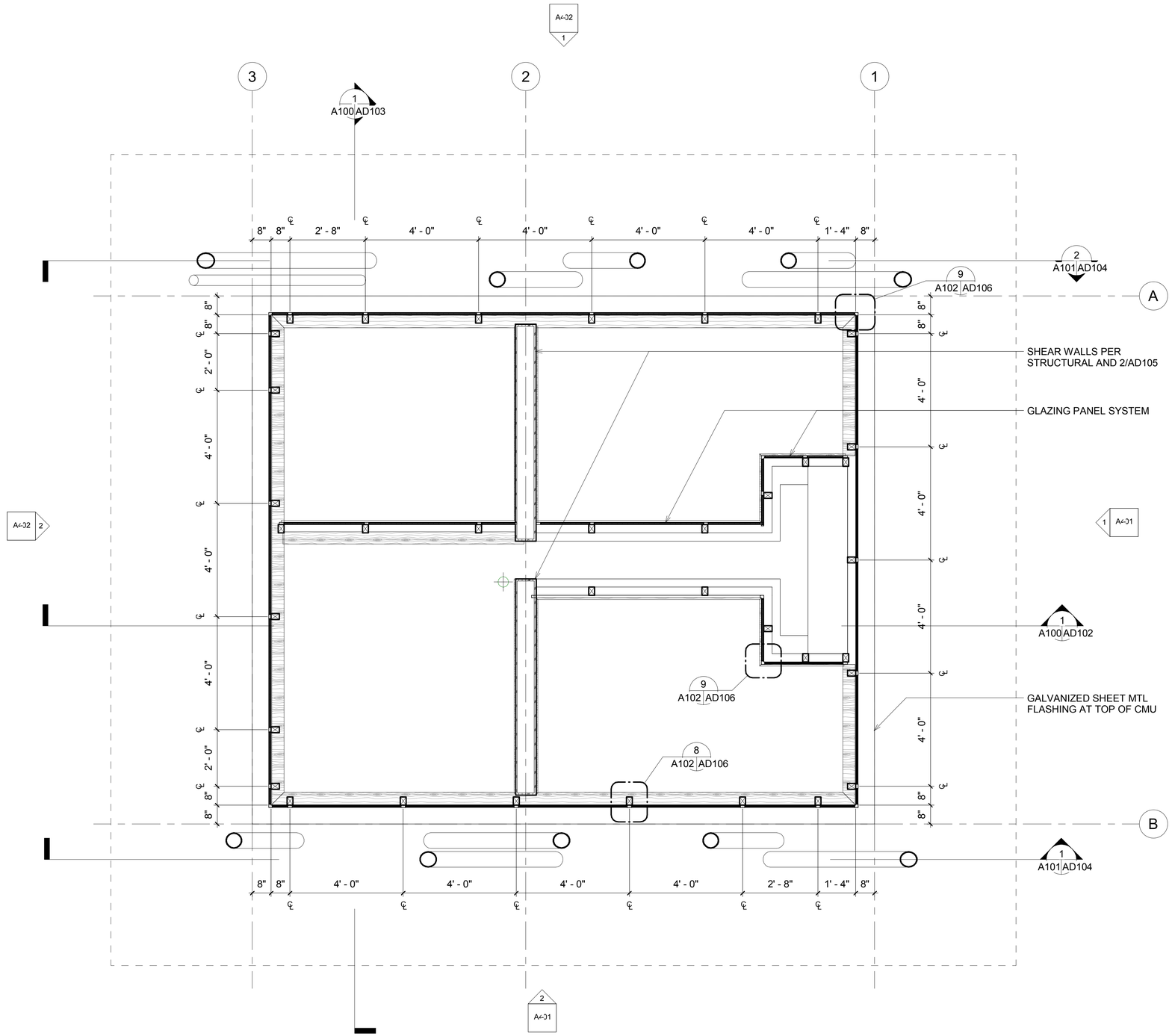

UPPER WALL
1/2" = 1'-0"
1
A401 A102

NORTH

BERGER PARTNERSHIP
1927 Post Alley, Ste. 2
Seattle, WA 98101
206 325 6877
bergerpartnership.com

INNOVA architects
950 Pacific Avenue, Suite 450
Tacoma, WA 98402
253-572-4903

Totem Lake Park Phase 1
City of Kirkland

12031 Totem Lake Way, Kirkland, WA 98034

8404 REGISTERED ARCHITECT
GEOFFREY E. ANDERSON
STATE OF WASHINGTON

SET TYPE:
Bid Set

SET ISSUE DATE:
9/13/2019

REVISIONS:

Δ	DESCRIPTION	DATE

DRAWN/CHECKED:
GO GEA

SHEET NAME:
UPPER WALL PLAN

SHEET NUMBER:
A102

Berger Partnership Project Number: XXXXXXXX.XX Plotted: 08.18.2011 5:18 PM By: Gennadiy Ogay Filename: p:\2017\17-116 totem lake splash pad (berger)\drawings\acad-totem lake park-ph1 - title block.dwg

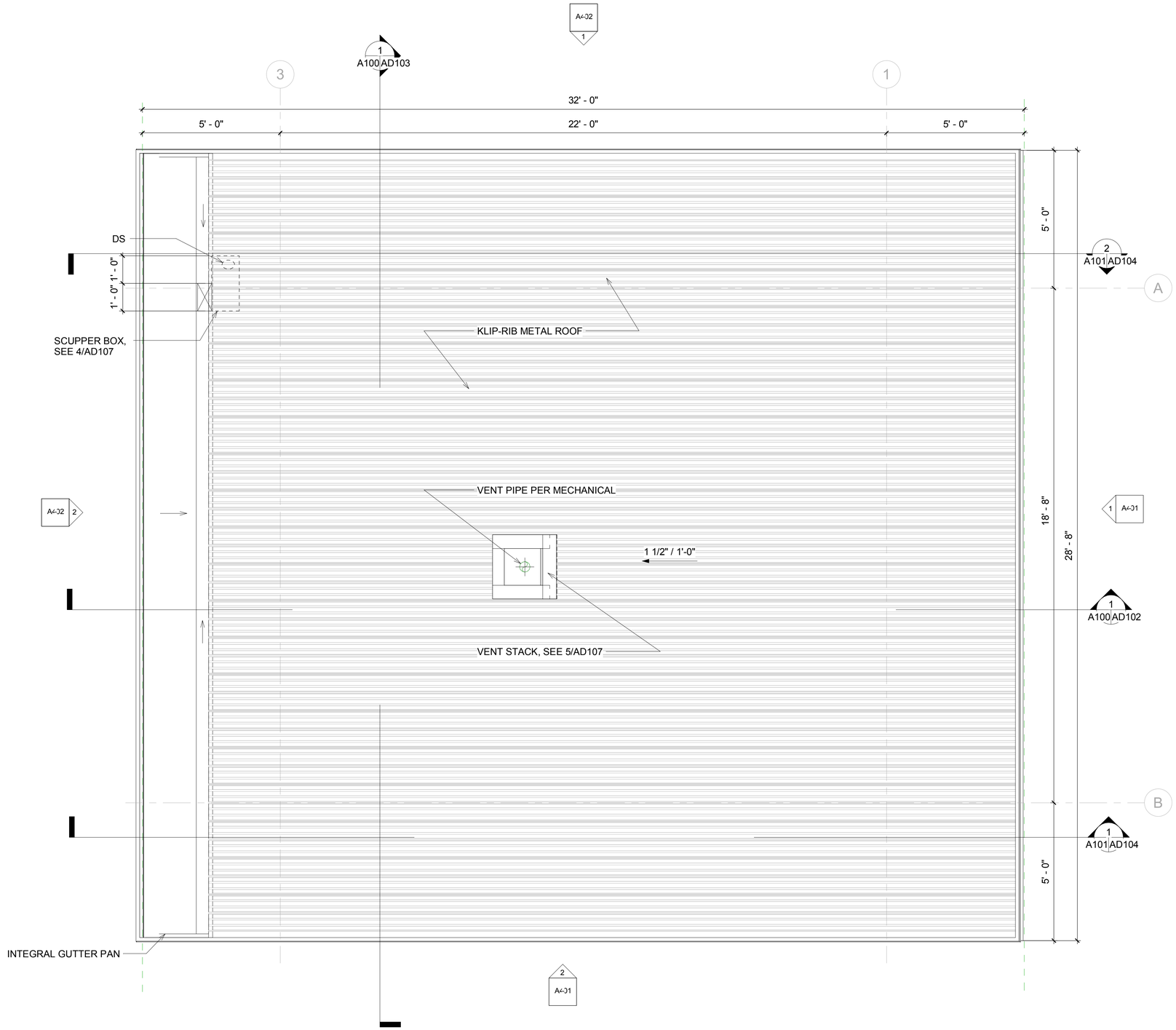

ROOF PLAN

1/2" = 1'-0"

1
A103

NORTH

2' 1' 0 2' 4' 6'

1/2" = 1'-0"

PARTNERSHIP berger
1927 Post Alley, Ste. 2
Seattle, WA 98101
206 325 6877
bergerpartnership.com

INNOVA architects
950 Pacific Avenue, Suite 450
Tacoma, WA 98402
253-572-4903

Totem Lake Park Phase 1

City of Kirkland

12031 Totem Lake Way, Kirkland, WA 98034

8404 REGISTERED ARCHITECT
GEOFFREY E. ANDERSON
STATE OF WASHINGTON

SET TYPE:
Bid Set

SET ISSUE DATE:
9/13/2019

REVISIONS:

Δ	DESCRIPTION	DATE

DRAWN/CHECKED:
GO GEA

SHEET NAME:
ROOF PLAN

SHEET NUMBER:
A103

Berger Partnership Project Number: XXXXXXXX.XX Plotted: 08.18.2011 5:18 PM By: Gennadiy Ogay Filename: p:\2017\17-116 totem lake splash pad (berger)\drawings\acad-totem lake park-ph1 - title block.dwg

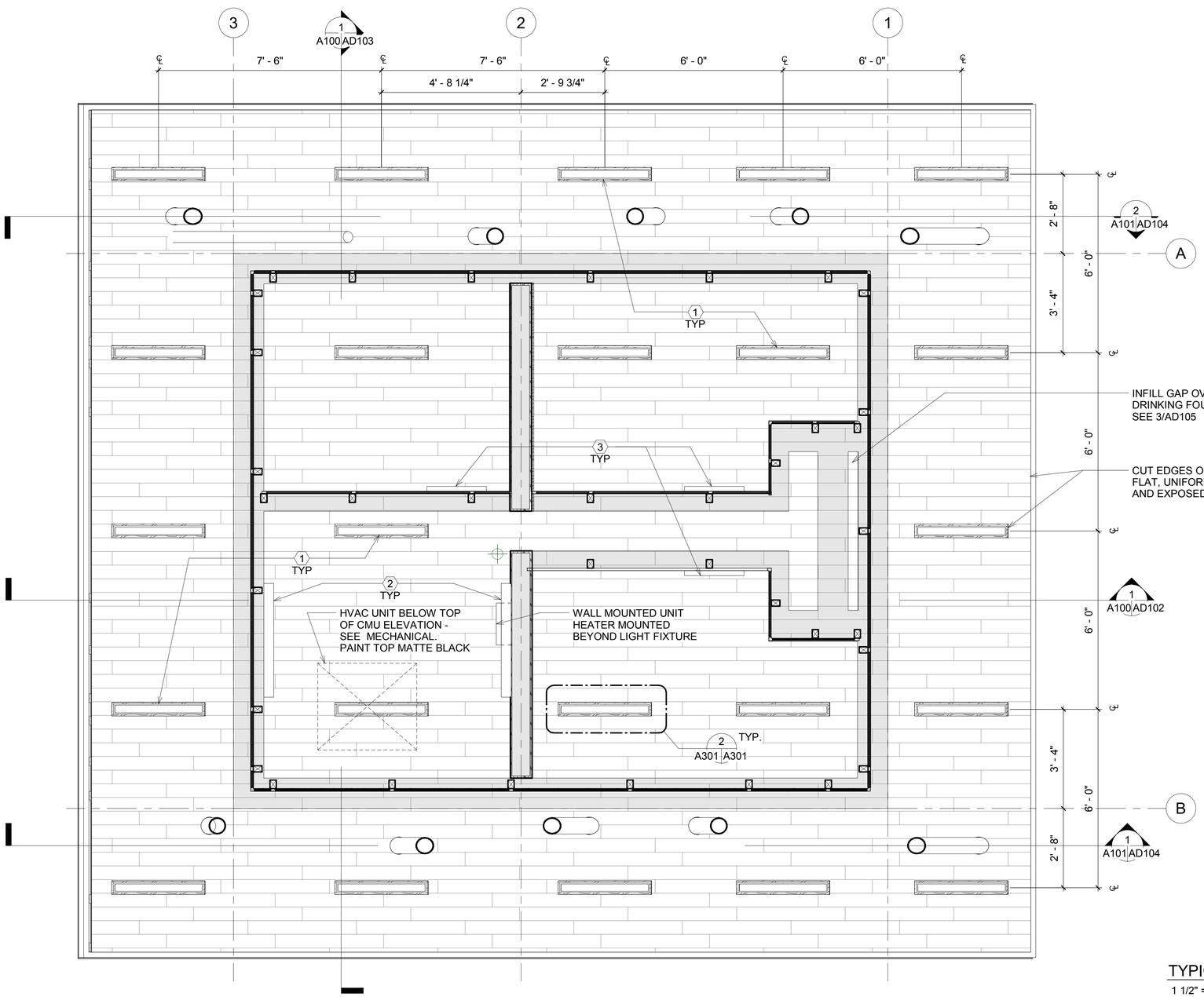

REFLECTED CEILING PLAN

1/2" = 1'-0"

1 A301

NORTH

RCP LEGENDS

1x6 IPE WOOD SOFFIT BOARD

RCP NOTES

1. CEILING LIGHTS PER ELECTRICAL
2. WALL MOUNT LIGHTS PER ELECTRICAL
3. VANITY LIGHTS PER ELECTRICAL

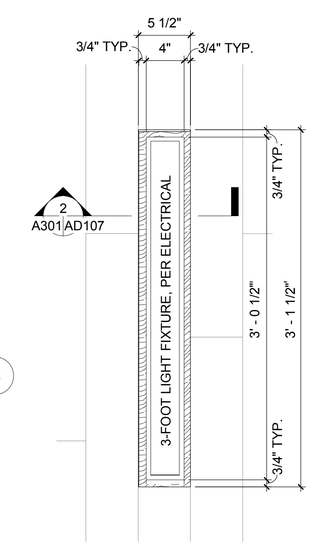

TYPICAL LIGHT FIXTURE OPENING

1 1/2" = 1'-0"

2 A301

1 1/2" = 1'-0" 8" 4" 0 6" 1' 2'

1/2" = 1'-0" 2' 1' 0 2' 4' 6'

PARTNERSHIP berger
1927 Post Alley, Ste. 2
Seattle, WA 98101
206 325 6877
bergerpartnership.com

INNOVA architects
950 Pacific Avenue, Suite 450
Tacoma, WA 98402
253-572-4903

Totem Lake Park Phase 1

City of Kirkland

12031 Totem Lake Way, Kirkland, WA 98034

8404 REGISTERED ARCHITECT
GEOFFREY E. ANDERSON
STATE OF WASHINGTON

SET TYPE:
Bid Set

SET ISSUE DATE:
9/13/2019

REVISIONS:

Δ	DESCRIPTION	DATE

DRAWN/CHECKED:
GO GEA

SHEET NAME:
REFLECTED CEILING PLAN

SHEET NUMBER:
A301

Berger Partnership Project Number: XXXXXXXX.XX Plotted: 08.18.2011 5:18 PM By: Gennadiy Ogay Filename: p:\2017\17-116 totem lake splash pad (berger)\drawings\acad-totem lake park-ph1 - title block.dwg

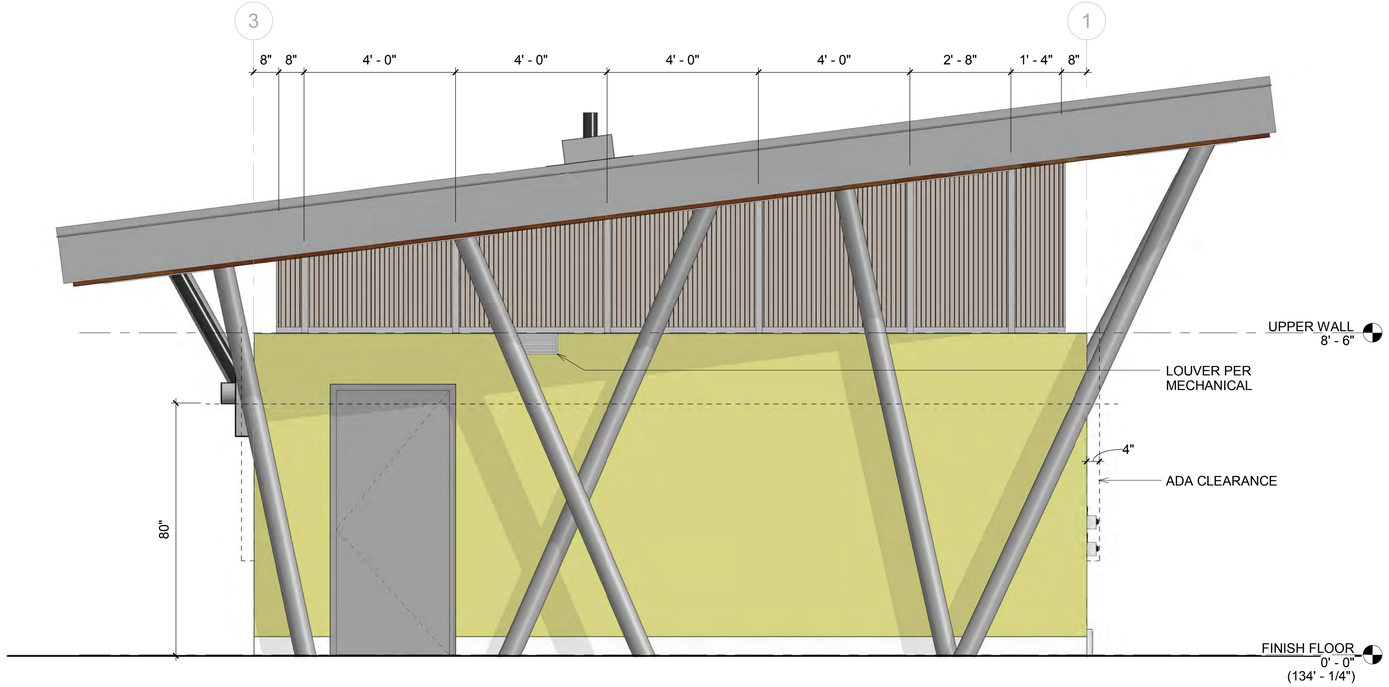

SOUTH ELEVATION
1/2" = 1'-0"
2
A100 A401

EAST ELEVATION
1/2" = 1'-0"
1
A100 A401

TOTAL VERTICAL FENESTRATION:

SOUTH: 66.97 SF
EAST: 79.06 SF
NORTH: 66.97 SF
WEST: 33.91 SF

TOTAL: 246.91 SF

TOTAL WALL AREA:
691.34 SF

% OF VERTICAL FENESTRTION
TO GROSS WALL AREA:
= 35.7%

PROJECTION FACTOR:
PF = A/B
= 5'/4.5' MAX
PF $\geq$ 1.0

2' 1' 0 2' 4' 6'
1/2" = 1'-0"

PARTNERSHIP berger
1927 Post Alley, Ste. 2
Seattle, WA 98101
206 325 6877
bergerpartnership.com

INNOVA architects
950 Pacific Avenue, Suite 450
Tacoma, WA 98402
253-572-4903

Totem Lake Park Phase 1
City of Kirkland

12031 Totem Lake Way, Kirkland, WA 98034

8404 REGISTERED ARCHITECT
GEOFFREY E. ANDERSON
STATE OF WASHINGTON

SET TYPE:
Bid Set

SET ISSUE DATE:
9/13/2019

REVISIONS:

Δ	DESCRIPTION	DATE

DRAWN/CHECKED:
GO GEA

SHEET NAME:
EXTERIOR ELEVATIONS I

SHEET NUMBER:
A401

Berger Partnership Project Number: XXXXXXXX.XX Plotted: 08.18.2011 5:18 PM By: Gennadiy Ogay Filename: p:\2017\17-116 totem lake splash pad (berger)\drawings\acad-totem lake park-ph1 - title block.dwg

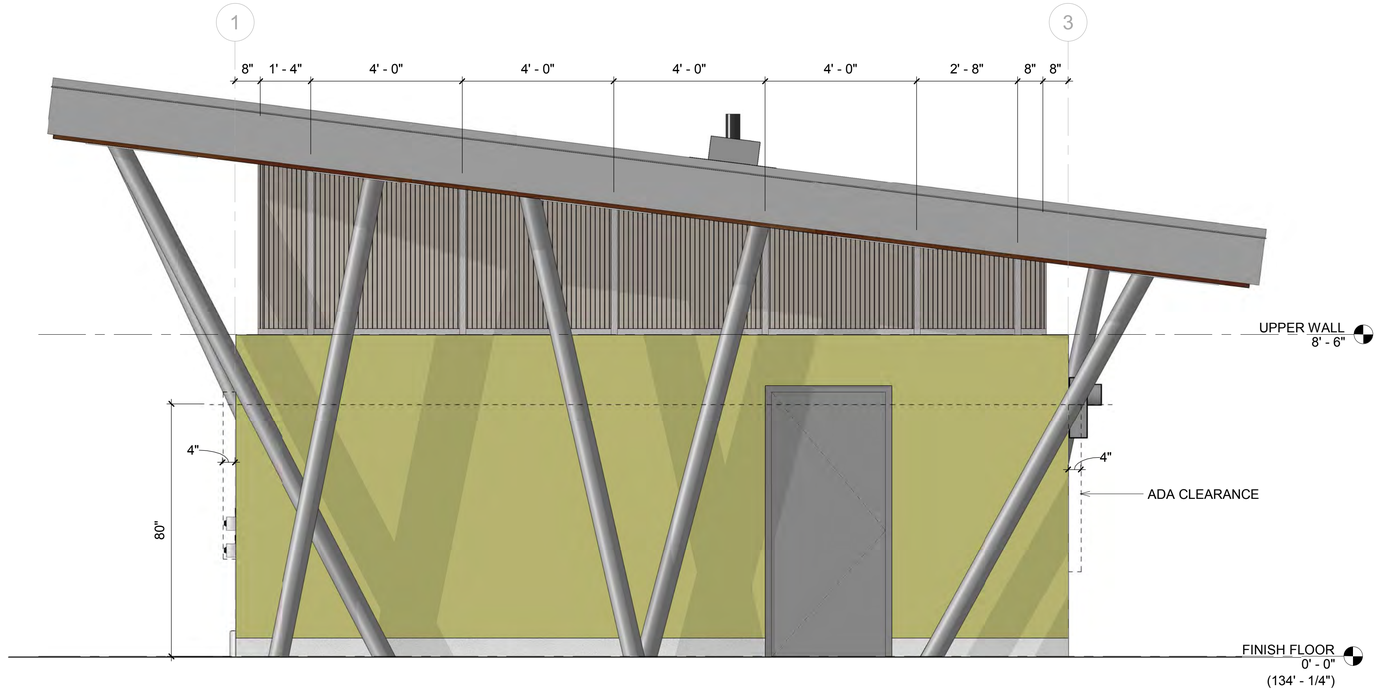

NORTH ELEVATION
1/2" = 1'-0"
1
A100 A402

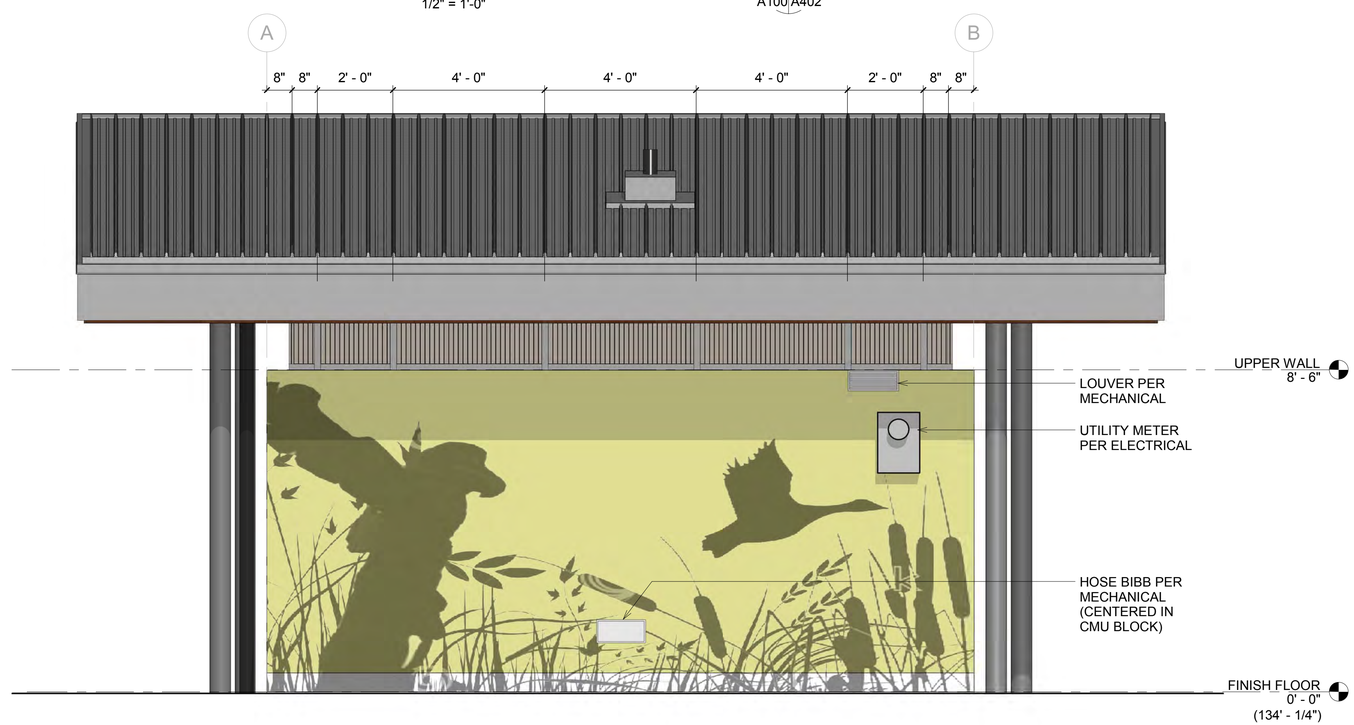

WEST ELEVATION
1/2" = 1'-0"
2
A100 A402

PARTNERSHIP berger
1927 Post Alley, Ste. 2
Seattle, WA 98101
206 325 6877
bergerpartnership.com

INNOVA architects
950 Pacific Avenue, Suite 450
Tacoma, WA 98402
253-572-4903

Totem Lake Park Phase 1
City of Kirkland

12031 Totem Lake Way, Kirkland, WA 98034

8404 REGISTERED ARCHITECT
GEOFFREY E. ANDERSON
STATE OF WASHINGTON

SET TYPE:
Bid Set

SET ISSUE DATE:
9/13/2019

REVISIONS:

Δ	DESCRIPTION	DATE

DRAWN/CHECKED:
GO GEA

SHEET NAME:
EXTERIOR ELEVATIONS II

SHEET NUMBER:
A402

Berger Partnership Project Number: XXXXXXXX.XX Plotted: 08.18.2011 5:18 PM By: Gennadiy Ogay Filename: p:\2017\17-116 totem lake splash pad (berger)\drawings\acad-totem lake park-ph1 - title block.dwg

PERSPECTIVE VIEW I

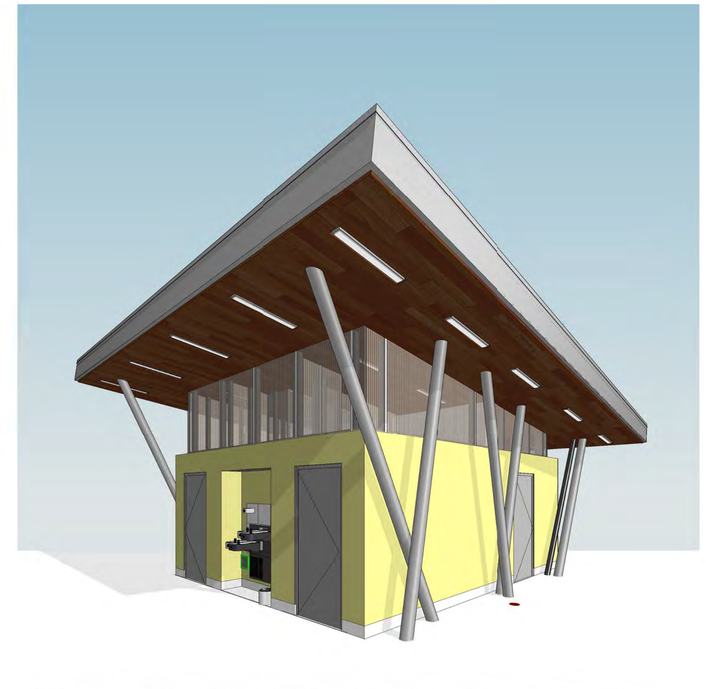

PERSPECTIVE VIEW III

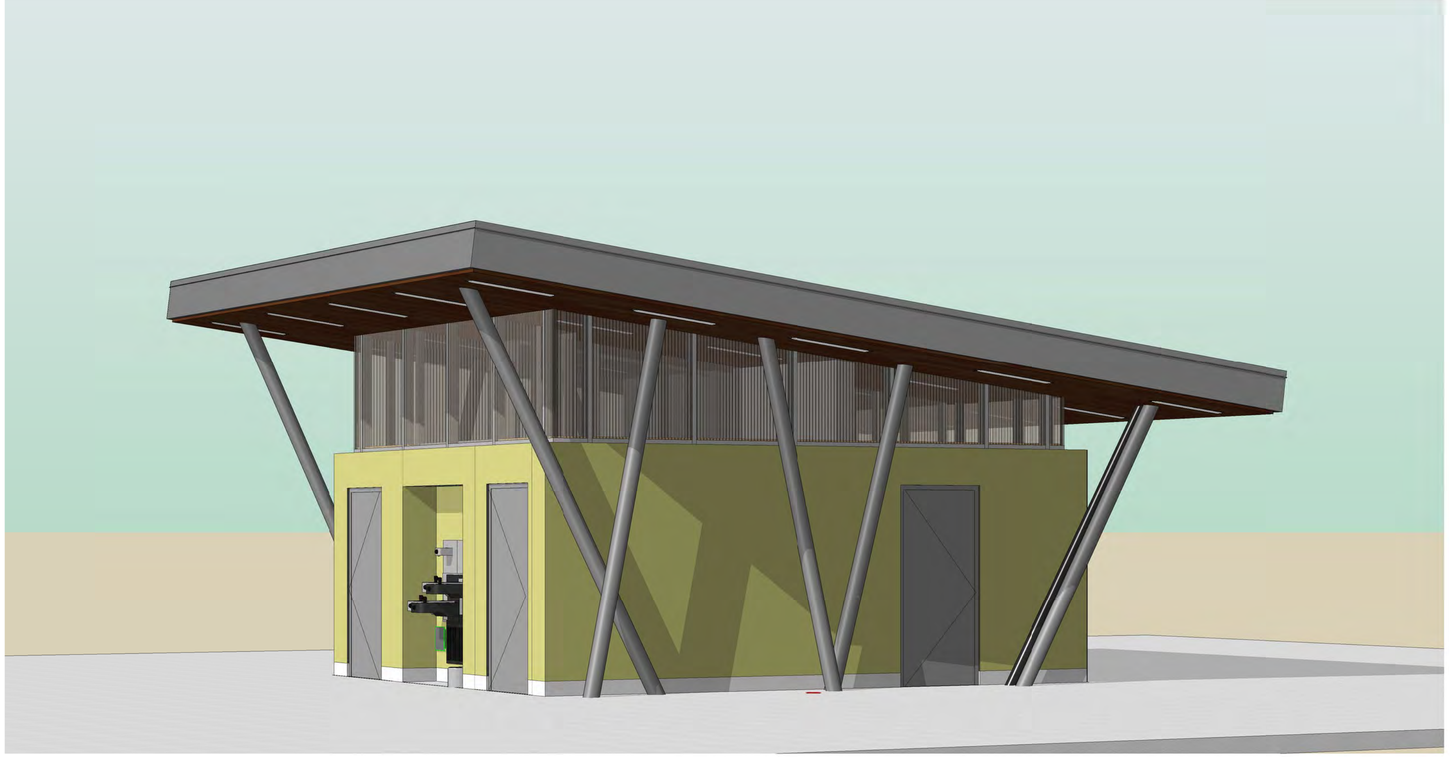

PERSPECTIVE VIEW II

PERSPECTIVE VIEW IV

PARTNERSHIP berger
1927 Post Alley, Ste. 2
Seattle, WA 98101
206 325 6877
bergerpartnership.com

INNOVA architects
950 Pacific Avenue, Suite 450
Tacoma, WA 98402
253-572-4903

Totem Lake Park Phase 1

City of Kirkland

12031 Totem Lake Way, Kirkland, WA 98034

8404 REGISTERED ARCHITECT
GEOFFREY E. ANDERSON
STATE OF WASHINGTON

SET TYPE:
Bid Set

SET ISSUE DATE:
9/13/2019

REVISIONS:

Δ	DESCRIPTION	DATE

DRAWN/CHECKED:
GO GEA

SHEET NAME:
PERSPECTIVES

SHEET NUMBER:
A403

Berger Partnership Project Number: XXXXXXXX.XX Plotted: 08.18.2011 5:18 PM By: Gennadiy Ogay Filename: p:\2017\17-116 totem lake splash pad (berger)\drawings\acad-totem lake park-ph1 - title block.dwg

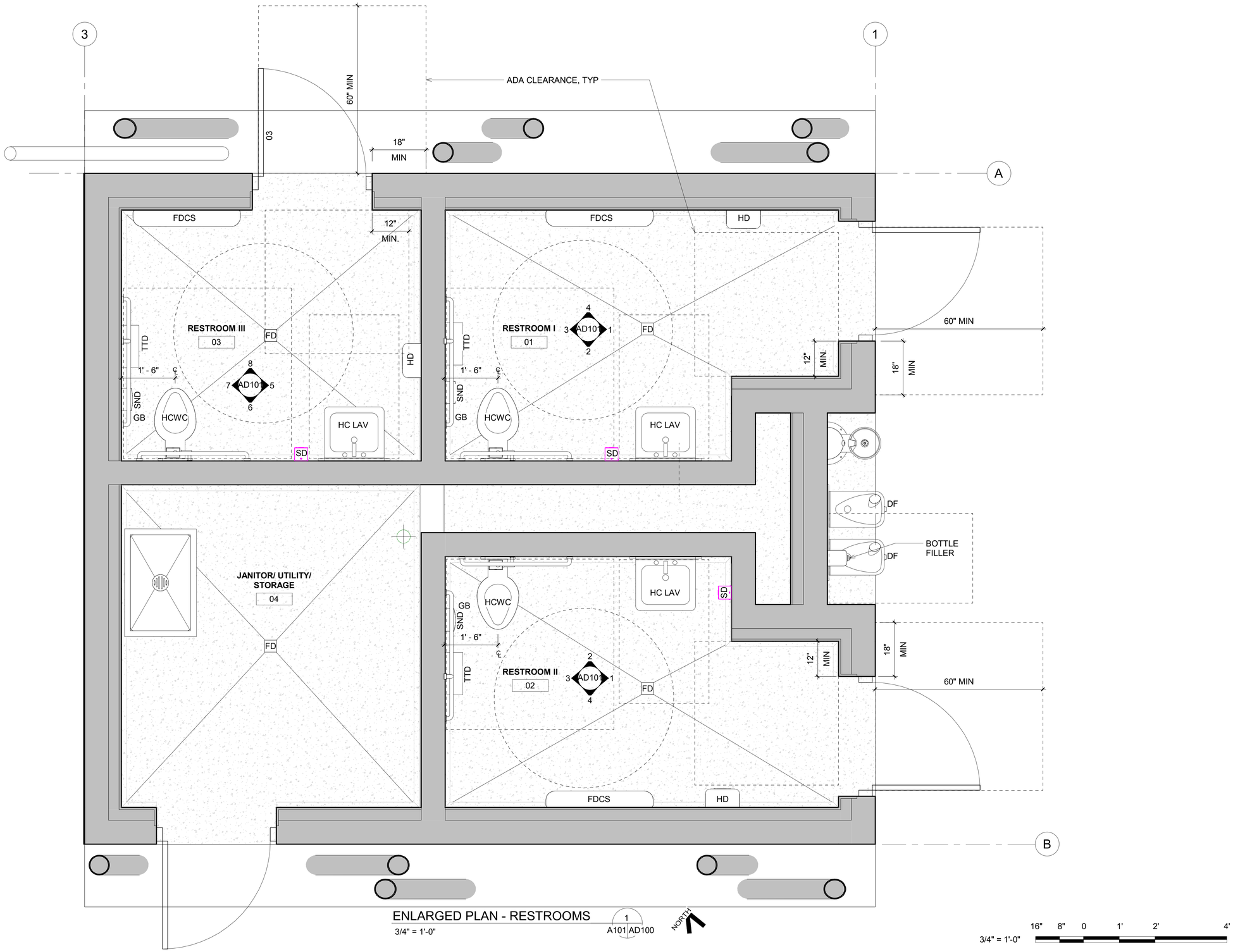

ENLARGED PLAN - RESTROOMS

3/4" = 1'-0"

1 A101 AD100

NORTH

3/4" = 1'-0"

16" 8" 0 1' 2' 4'

PARTNERSHIP berger
1927 Post Alley, Ste. 2
Seattle, WA 98101
206 325 6877
bergerpartnership.com

INNOVA architects
950 Pacific Avenue, Suite 450
Tacoma, WA 98402
253-572-4903

Totem Lake Park Phase 1

City of Kirkland

12031 Totem Lake Way, Kirkland, WA 98034

8404 REGISTERED ARCHITECT
GEOFFREY E. ANDERSON
STATE OF WASHINGTON

SET TYPE:
Bid Set

SET ISSUE DATE:
9/13/2019

REVISIONS:

Δ	DESCRIPTION	DATE

DRAWN/CHECKED:
SES,GO GEA

SHEET NAME:
ENLARGED PLANS

SHEET NUMBER:
AD100

Berger Partnership Project Number: XXXXXXXX.XX Plotted: 08.18.2011 5:18 PM By: Gennadiy Ogay Filename: p:\2017\17-116 totem lake splash pad (berger)\drawings\acad-totem lake park-ph1 - title block.dwg

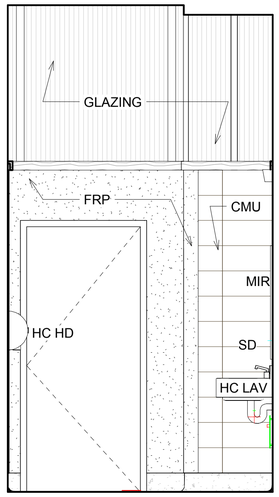

ELEVATION 1

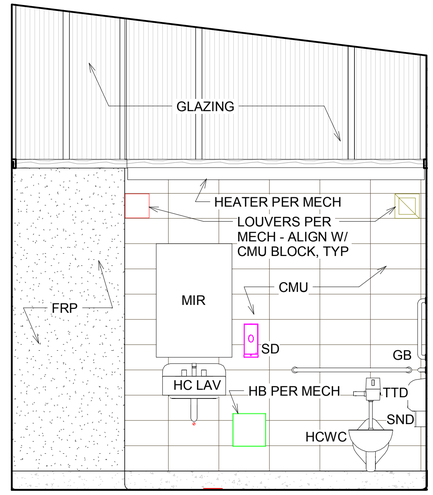

ELEVATION 2

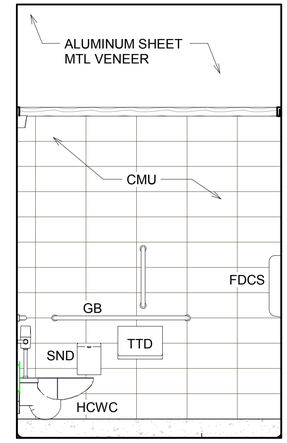

ELEVATION 3

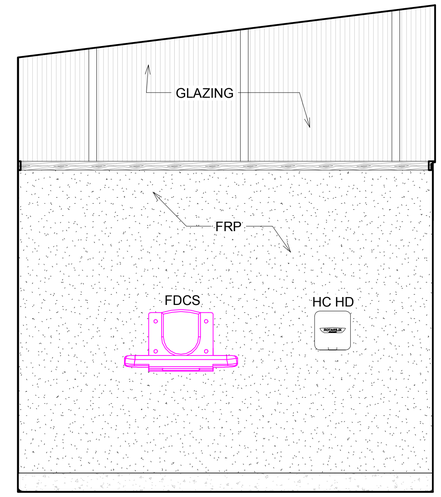

ELEVATION 4

RESTROOM 01, 02 OPP

1/2" = 1'-0"

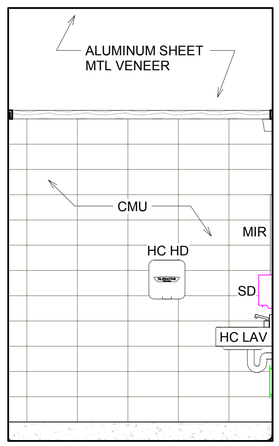

ELEVATION 5

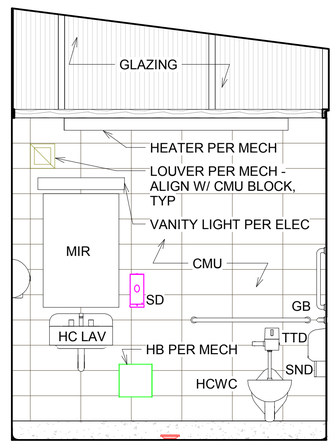

ELEVATION 6

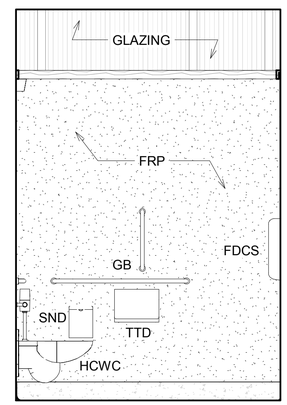

ELEVATION 7

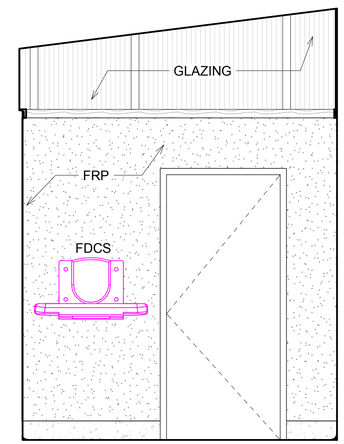

ELEVATION 8

RESTROOM 03

1/2" = 1'-0"

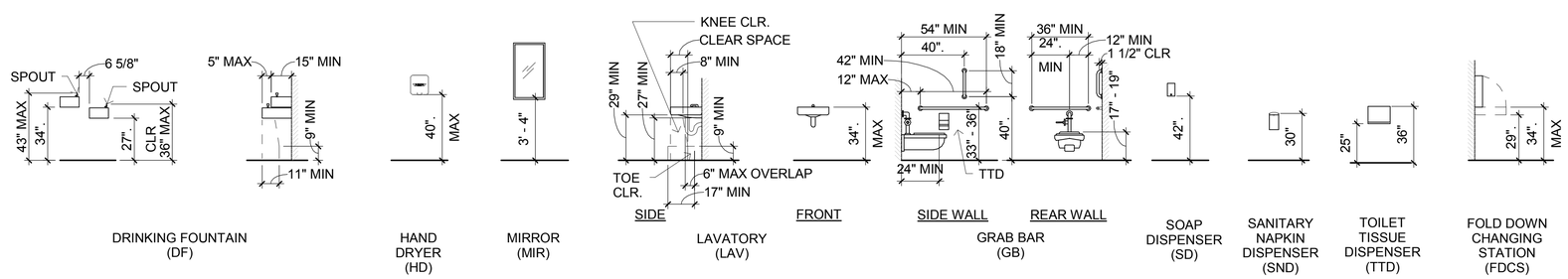

TYPICAL FIXTURE/ EQUIPMENT MOUNTING HEIGHTS

FOR HANDICAP ACCESSIBILITY (U.O.N.)

1/2" = 1'-0" 2' 1' 0 2' 4' 6'

PARTNERSHIP berger
1927 Post Alley, Ste. 2
Seattle, WA 98101
206 325 6877
bergerpartnership.com

INNOVA architects
950 Pacific Avenue, Suite 450
Tacoma, WA 98402
253-572-4903

Totem Lake Park Phase 1

City of Kirkland

12031 Totem Lake Way, Kirkland, WA 98034

8404 REGISTERED ARCHITECT GEOFFREY E. ANDERSON STATE OF WASHINGTON

SET TYPE: Bid Set

SET ISSUE DATE: 9/13/2019

REVISIONS:

Δ	DESCRIPTION	DATE

DRAWN/CHECKED: SES, GO GEA

SHEET NAME: INTERIOR ELEVATIONS

SHEET NUMBER: AD101

Berger Partnership Project Number: XXXXXXXX.XX Printed: 08.18.2011 5:18 PM By: Gennadiy Ogay Filename: p:\2017\17-116 totem lake splash pad (berger)\drawings\acad-totem lake park-ph1 - title block.dwg

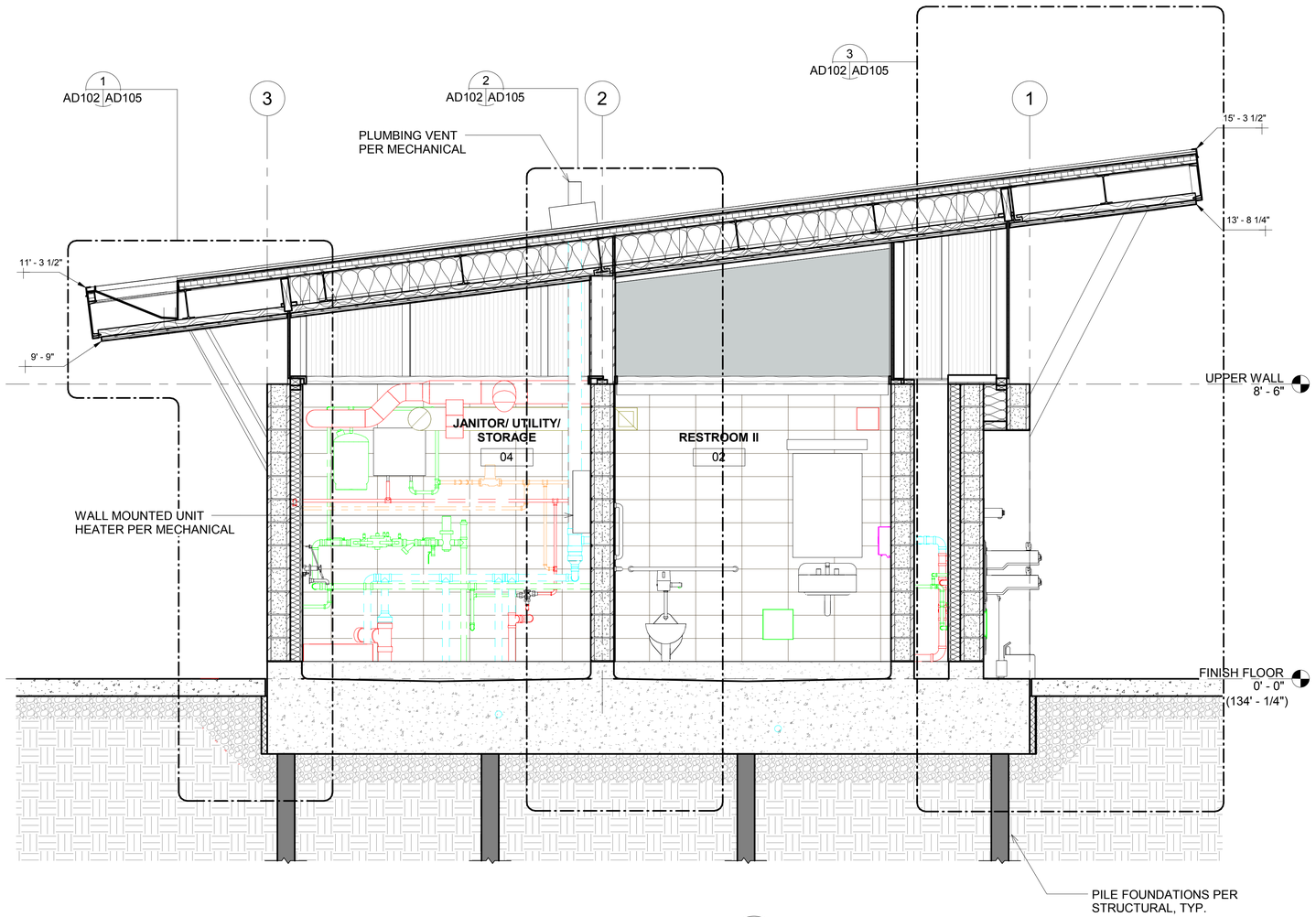

BUILDING SECTION 1 / A100 AD102

1/2" = 1'-0"

3/4" = 1'-0" 16" 8" 0 1' 2' 4'

PARTNERSHIP berger
1927 Post Alley, Ste. 2
Seattle, WA 98101
206 325 6877
bergerpartnership.com

INNOVA architects
950 Pacific Avenue, Suite 450
Tacoma, WA 98402
253-572-4903

Totem Lake Park Phase 1

City of Kirkland

12031 Totem Lake Way, Kirkland, WA 98034

8404 REGISTERED ARCHITECT
GEOFFREY E. ANDERSON
STATE OF WASHINGTON

SET TYPE:
Bid Set

SET ISSUE DATE:
9/13/2019

REVISIONS:

Δ	DESCRIPTION	DATE

DRAWN/CHECKED:
GO GEA

SHEET NAME:
BUILDING SECTION I

SHEET NUMBER:
AD102

Berger Partnership Project Number: XXXXXXXX.XX Plotted: 08.18.2011 5:18 PM By: Gennadiy Ogay Filename: p:\2017\17-116 totem lake splash pad (berger)\drawings\acad-totem lake park-ph1 - title block.dwg

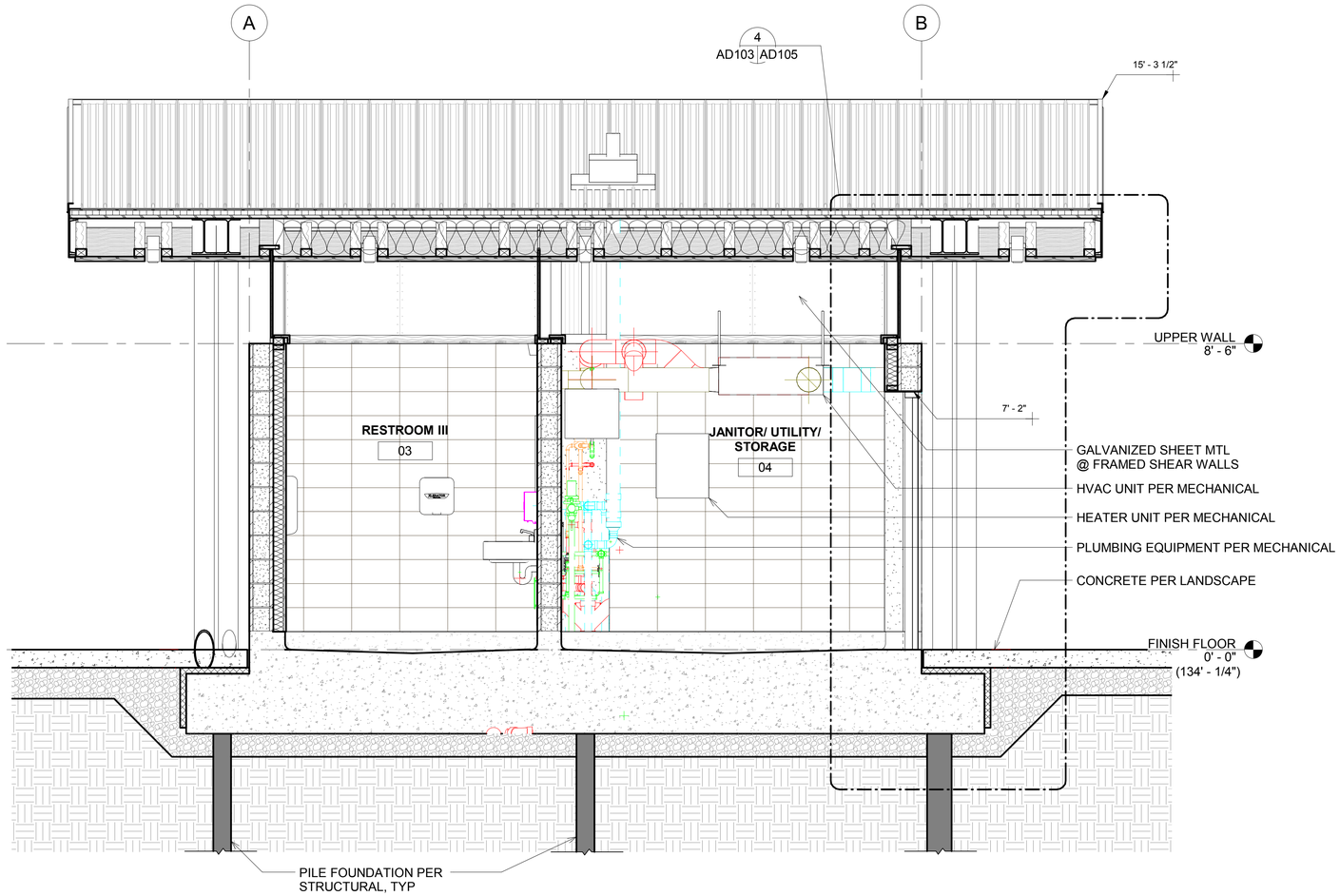

BUILDING SECTION

1/2" = 1'-0"

1
A100 AD103

1/2" = 1'-0" 2' 1' 0 2' 4' 6'

PARTNERSHIP berger
1927 Post Alley, Ste. 2
Seattle, WA 98101
206 325 6877
bergerpartnership.com

INNOVA architects
950 Pacific Avenue, Suite 450
Tacoma, WA 98402
253-572-4903

Totem Lake Park Phase 1

City of Kirkland

12031 Totem Lake Way, Kirkland, WA 98034

8404 REGISTERED ARCHITECT
GEOFFREY E. ANDERSON
STATE OF WASHINGTON

SET TYPE:
Bid Set

SET ISSUE DATE:
9/13/2019

REVISIONS:

Δ	DESCRIPTION	DATE

DRAWN/CHECKED:
GO GEA

SHEET NAME:
BUILDING SECTION II

SHEET NUMBER:
AD103

Berger Partnership Project Number: XXXXXXXX.XX Plotted: 08.18.2011 5:18 PM By: Gennadiy Ogay Filename: p:\2017\17-116 totem lake splash pad (berger)\drawings\acad-totem lake park-ph1 - title block.dwg

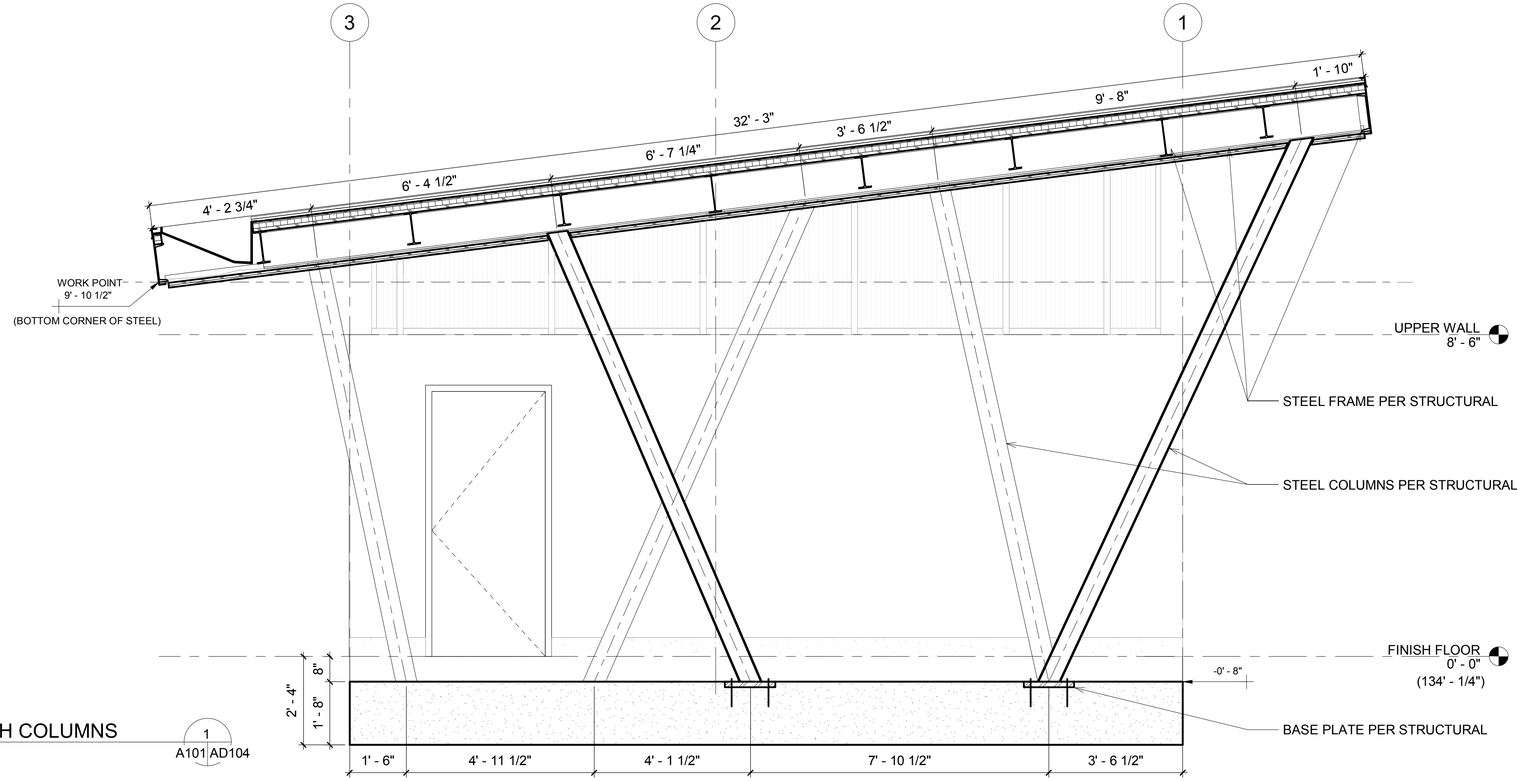

SECTION - SOUTH COLUMNS

1/2" = 1'-0"

1 A101 AD104

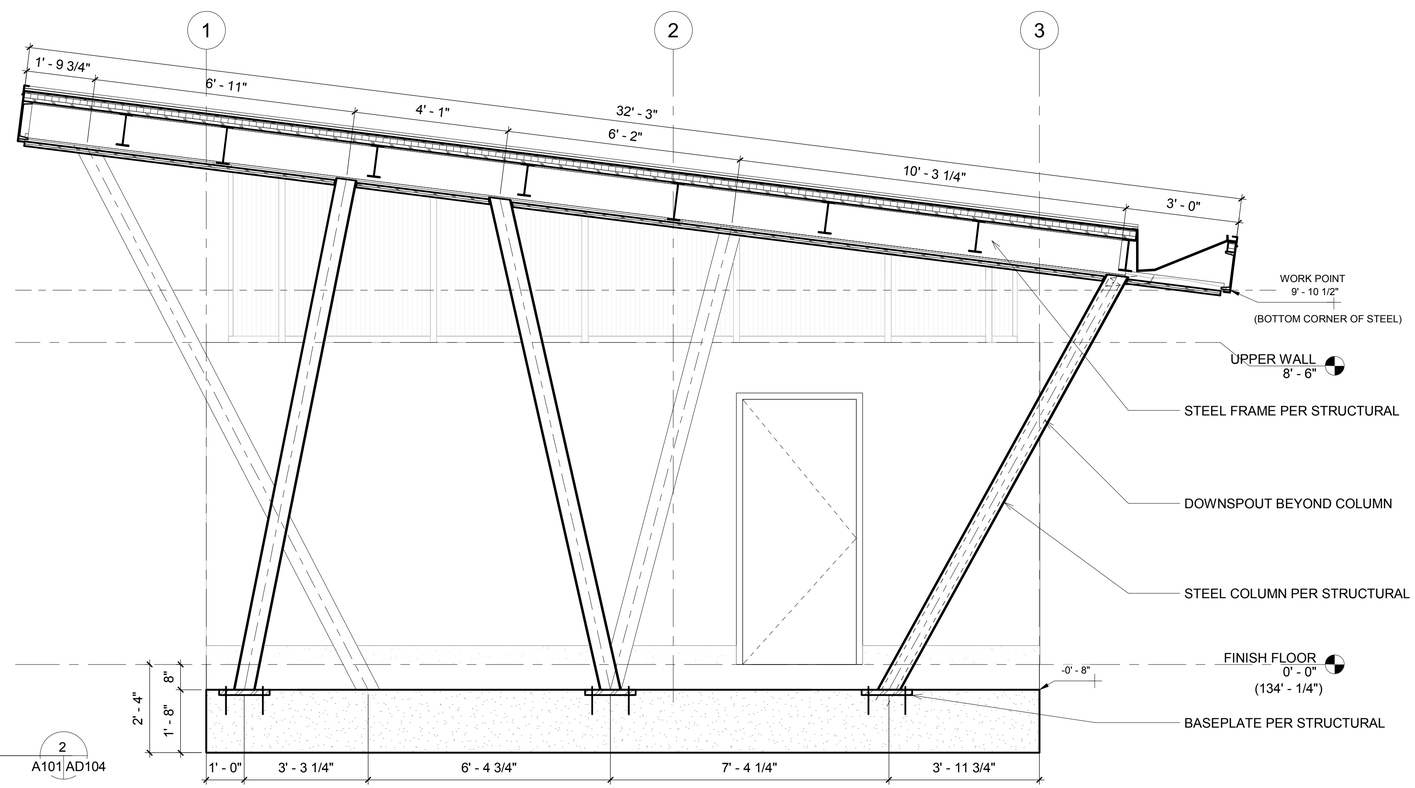

SECTION - NORTH COLUMNS

1/2" = 1'-0"

2 A101 AD104

PARTNERSHIP berger
1927 Post Alley, Ste. 2
Seattle, WA 98101
206 325 6877
bergerpartnership.com

INNOVA architects
950 Pacific Avenue, Suite 450
Tacoma, WA 98402
253-572-4903

Totem Lake Park Phase 1

City of Kirkland

12031 Totem Lake Way, Kirkland, WA 98034

8404 REGISTERED ARCHITECT
GEOFFREY E. ANDERSON
STATE OF WASHINGTON

SET TYPE:
Bid Set

SET ISSUE DATE:
9/13/2019

REVISIONS:

Δ	DESCRIPTION	DATE

DRAWN/CHECKED:
GO Checker

SHEET NAME:
SLOPED COLUMNS SECTIONS

SHEET NUMBER:
AD104

Berger Partnership Project Number: XXXXXXXX.XX Plotted: 08.18.2011 5:18 PM By: Gennadiy Ogay Filename: p:\2017\17-116 totem lake splash pad (berger)\drawings\acad-totem lake park-ph1 - title block.dwg

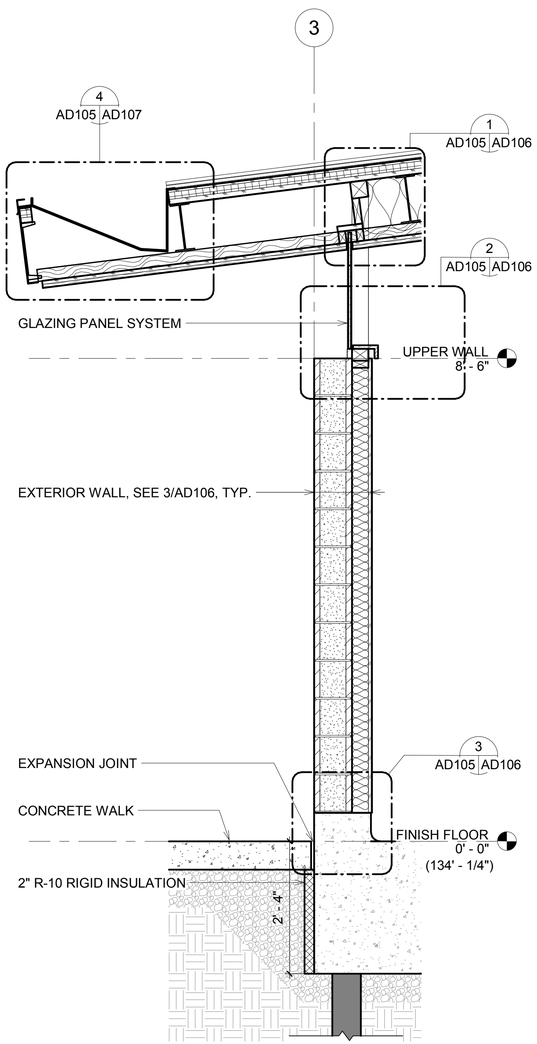

WALL SECTION - 1

3/4" = 1'-0"

1 AD102 AD105

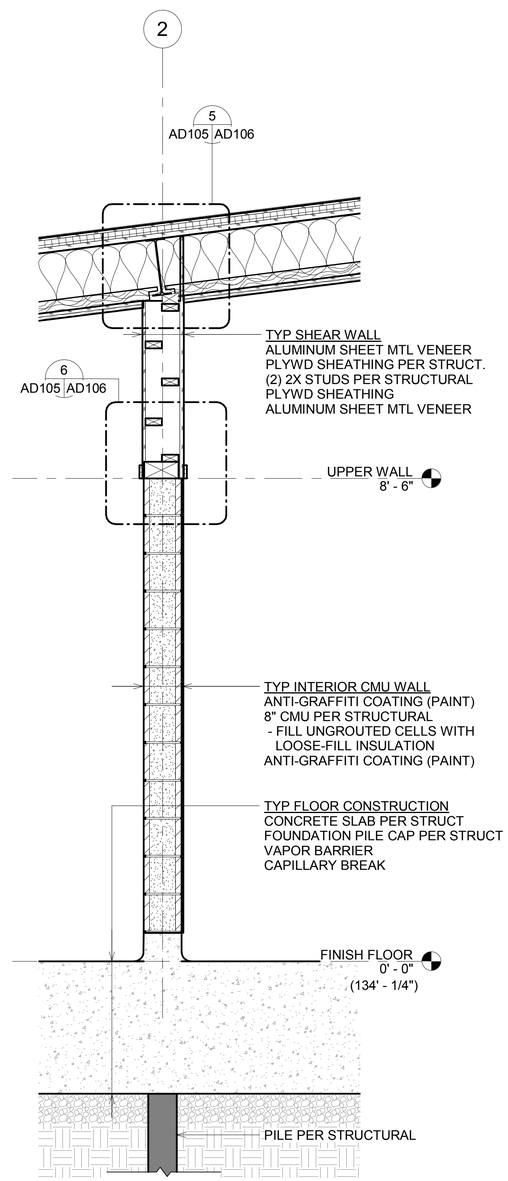

WALL SECTION - 2

3/4" = 1'-0"

2 AD102 AD105

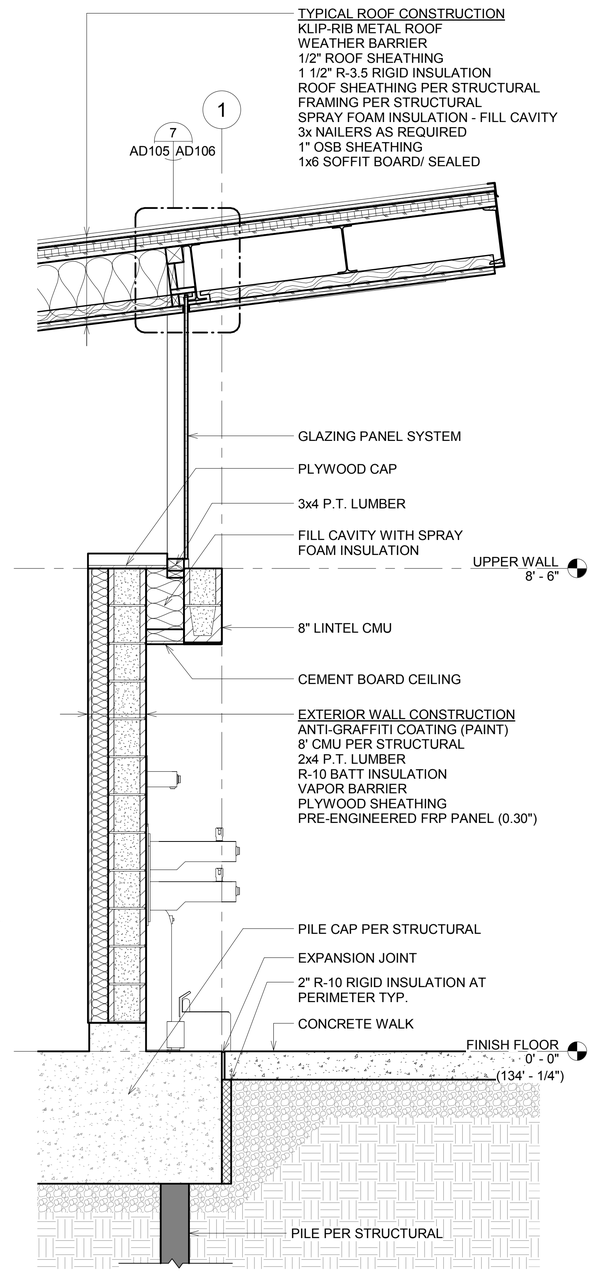

WALL SECTION - 3

3/4" = 1'-0"

3 AD102 AD105

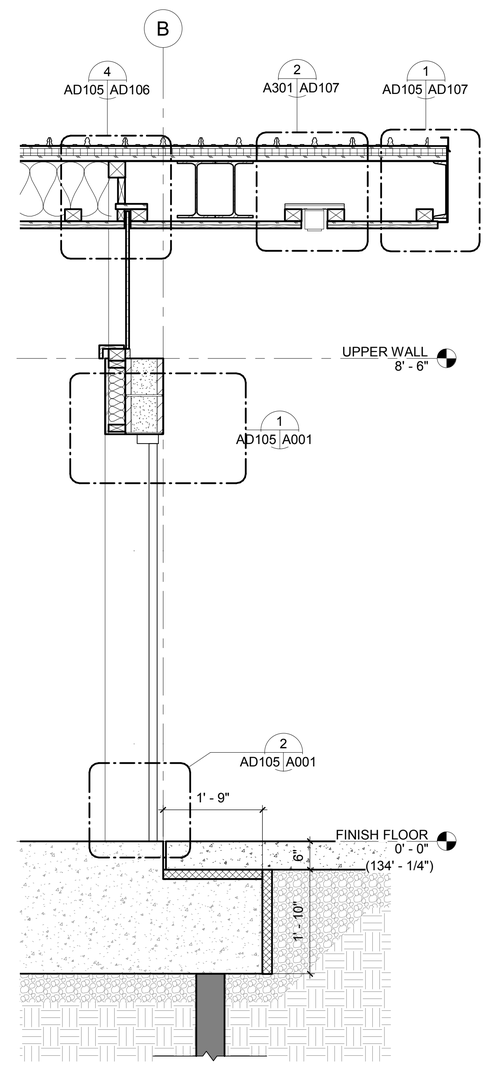

WALL SECTION - 4

3/4" = 1'-0"

4 AD103 AD105

PARTNERSHIP berger
1927 Post Alley, Ste. 2
Seattle, WA 98101
206 325 6877
bergerpartnership.com

INNOVA architects
950 Pacific Avenue, Suite 450
Tacoma, WA 98402
253-572-4903

Totem Lake Park Phase 1

City of Kirkland

12031 Totem Lake Way, Kirkland, WA 98034

8404 REGISTERED ARCHITECT
GEOFFREY E. ANDERSON
STATE OF WASHINGTON

SET TYPE:
Bid Set

SET ISSUE DATE:
9/13/2019

REVISIONS:

Δ	DESCRIPTION	DATE

DRAWN/CHECKED:
GO GEA

SHEET NAME:
WALL SECTIONS

SHEET NUMBER:
AD105

Berger Partnership Project Number: XXXXXXXX.XX Plotted: 08.18.2011 5:18 PM By: Gennadiy Ogay Filename: p:\2017\17-116 totem lake splash pad (berger)\drawings\acad-totem lake park-ph1 - title block.dwg

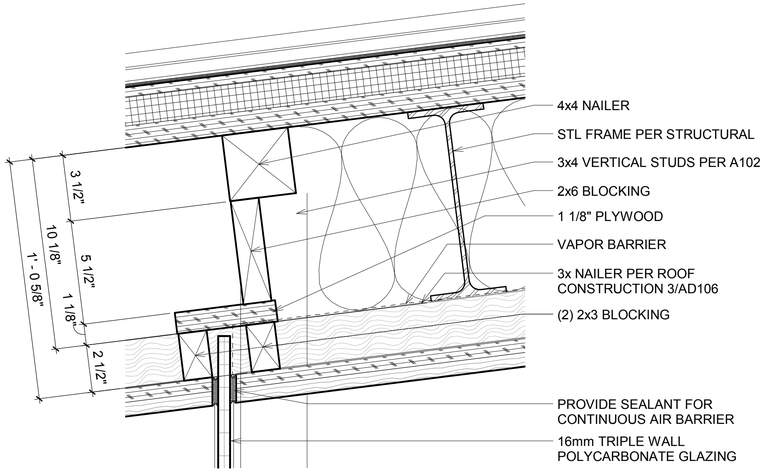

GLAZING TOP (WEST) 1 AD105 AD106

3" = 1'-0"

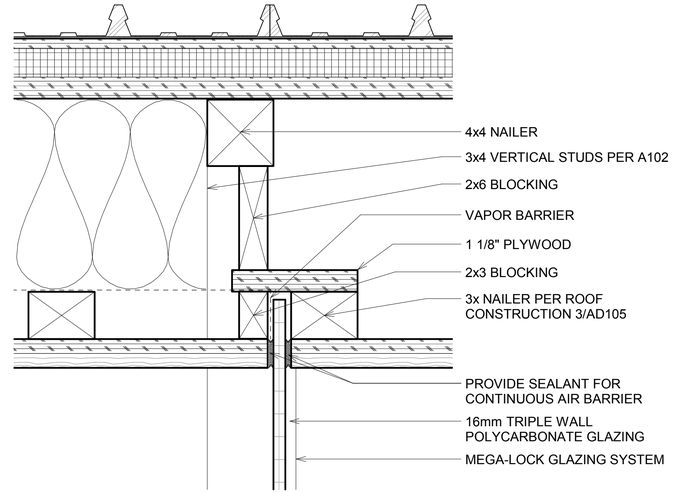

GLAZING TOP (NORTH, SOUTH) 4 AD105 AD106

3" = 1'-0"

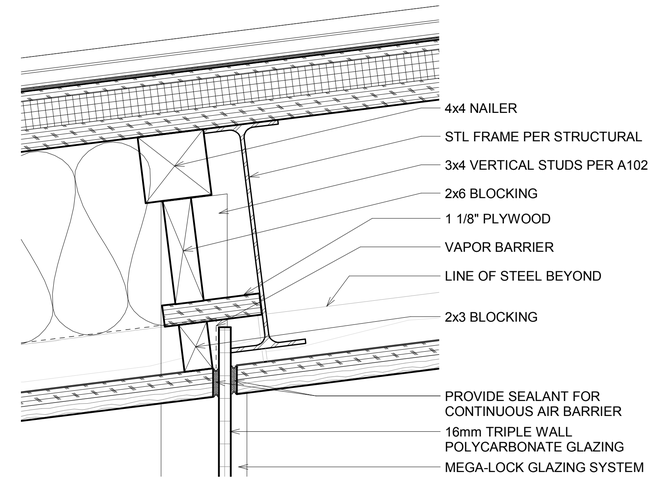

GLAZING TOP (EAST) 7 AD105 AD106

3" = 1'-0"

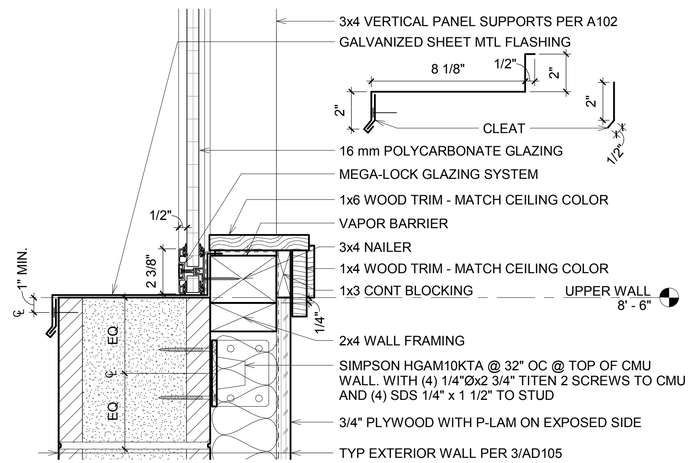

GLAZING BOTTOM 2 AD105 AD106

3" = 1'-0"

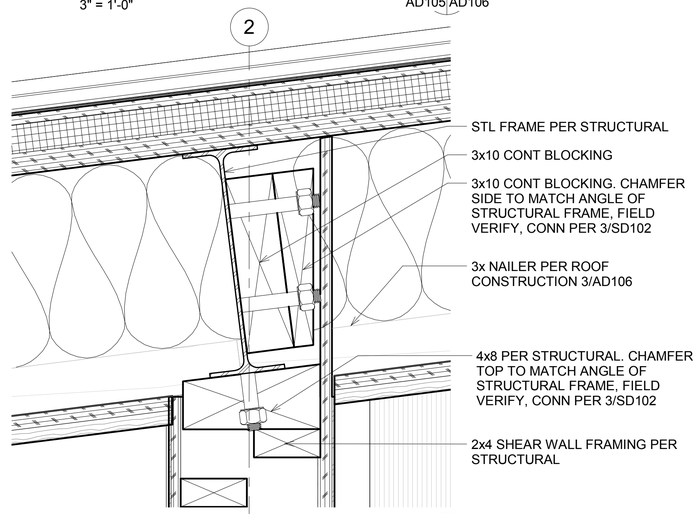

SHEAR WALL TOP 5 AD105 AD106

3" = 1'-0"

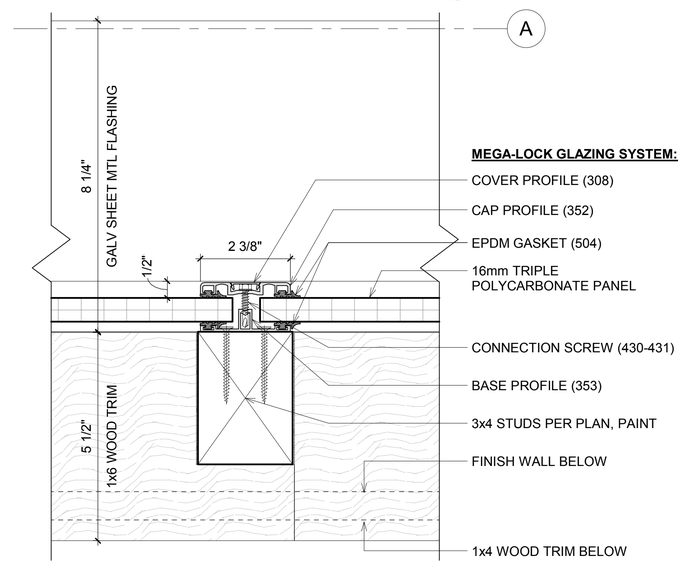

GLAZING JOINT CONNECTION 8 A102 AD106

6" = 1'-0"

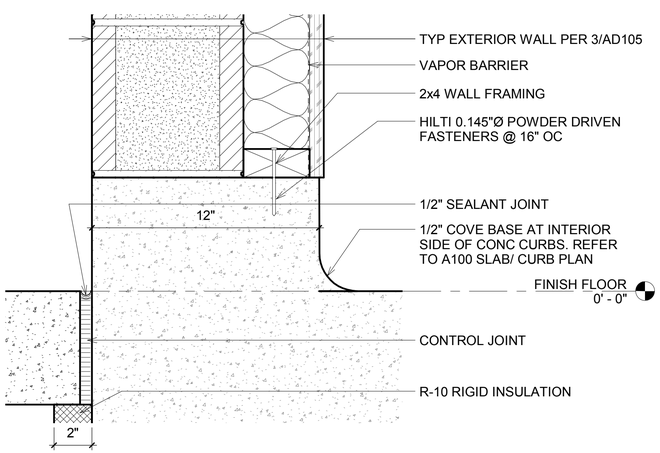

CURB WALL 3 AD105 AD106

3" = 1'-0"

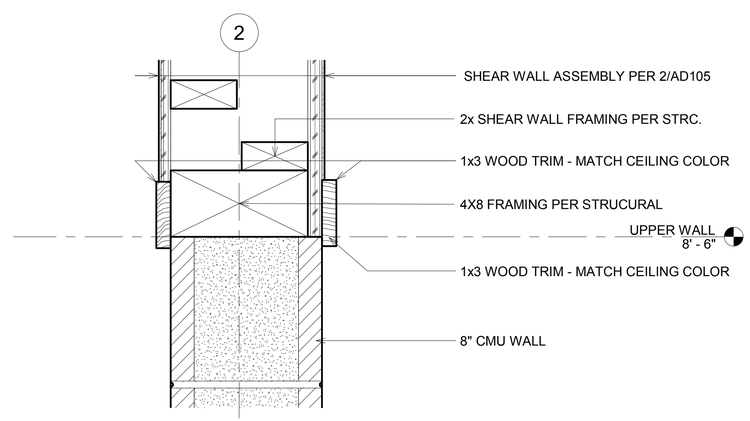

SHEAR WALL BOTTOM 6 AD105 AD106

3" = 1'-0"

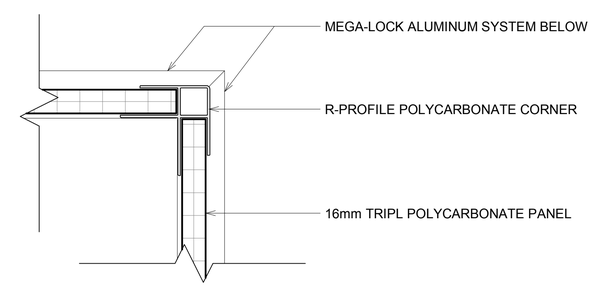

GLAZING CORNER CONNECTION 9 A102 AD106

6" = 1'-0"

3" = 1'-0" 9" 6" 0 3" 1'

6" = 1'-0" 6" 3" 0 6" 1'

PARTNERSHIP berger
1927 Post Alley, Ste. 2
Seattle, WA 98101
206 325 6877
bergerpartnership.com

INNOVA architects
950 Pacific Avenue, Suite 450
Tacoma, WA 98402
253-572-4903

Totem Lake Park Phase 1

City of Kirkland

12031 Totem Lake Way, Kirkland, WA 98034

8404 REGISTERED ARCHITECT GEOFFREY E. ANDERSON STATE OF WASHINGTON

SET TYPE: **Bid Set**

SET ISSUE DATE: **9/13/2019**

REVISIONS:

Δ	DESCRIPTION	DATE

DRAWN/CHECKED: GO GEA

SHEET NAME: WALL DETAILS

SHEET NUMBER: AD106

Berger Partnership Project Number: XXXXXXXX.XX Plotted: 08.18.2011 5:18 PM By: Gennadiy Ogay Filename: p:\2017\17-116 totem lake splash pad (berger)\drawings\acad-totem lake park-ph1 - title block.dwg

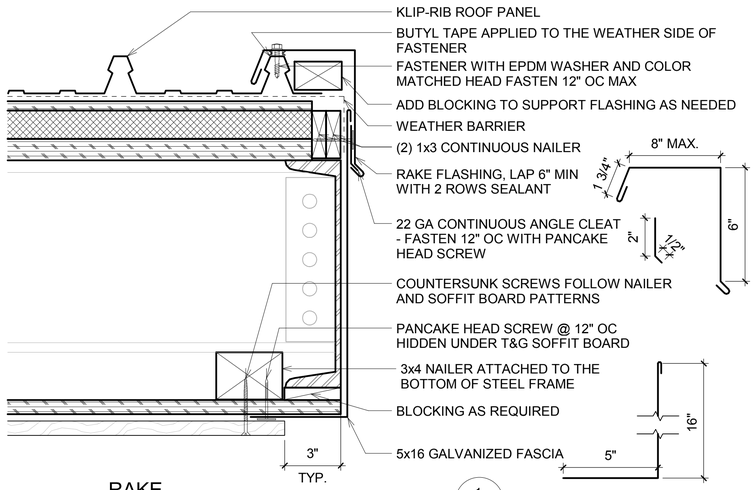

RAKE
3" = 1'-0"
1
AD105 AD107

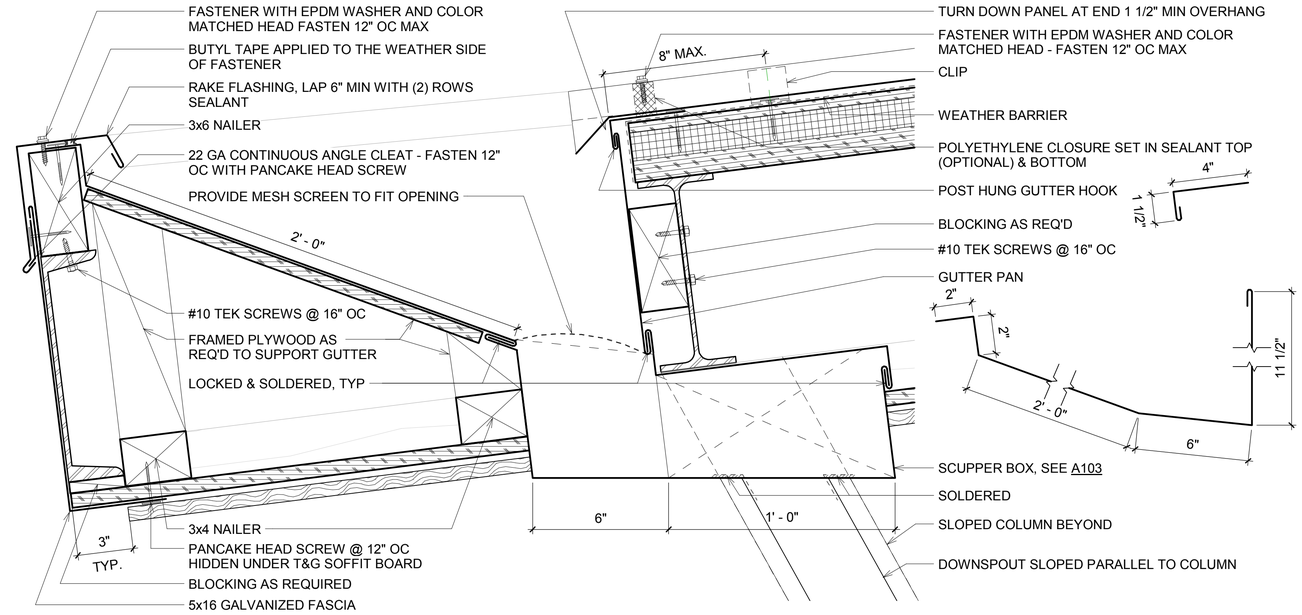

GUTTER
3" = 1'-0"
4
AD105 AD107

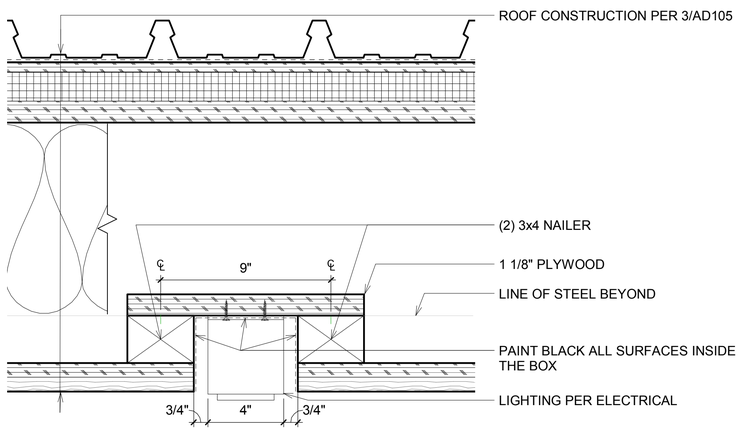

TYPICAL LIGHT BOX
3" = 1'-0"
2
AD105, A301 AD107

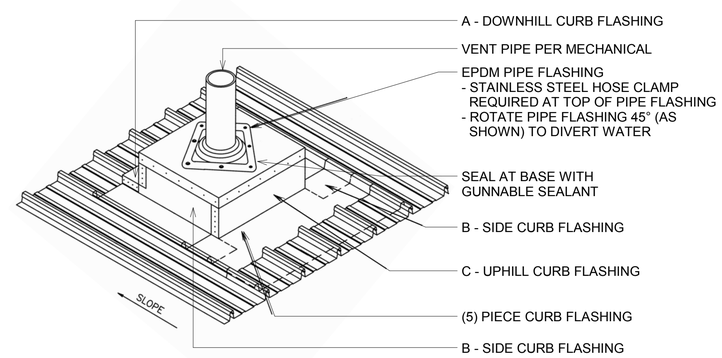

VENT FLASHING DIAGRAM
NTS
5
A103 AD107

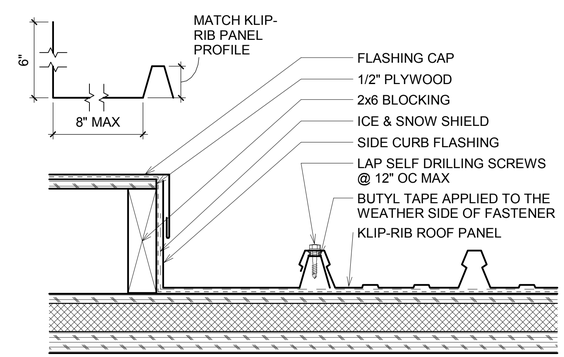

B - SIDE CURB
3" = 1'-0"
7
AD107 AD107

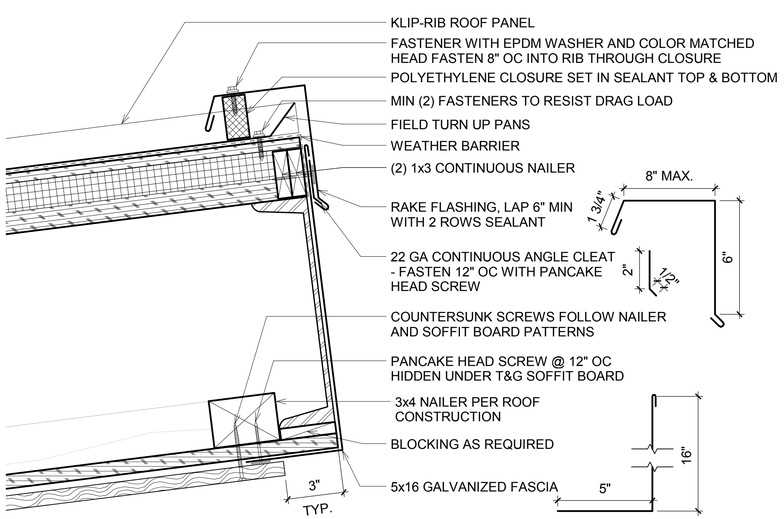

EAVE
3" = 1'-0"
3
AD107

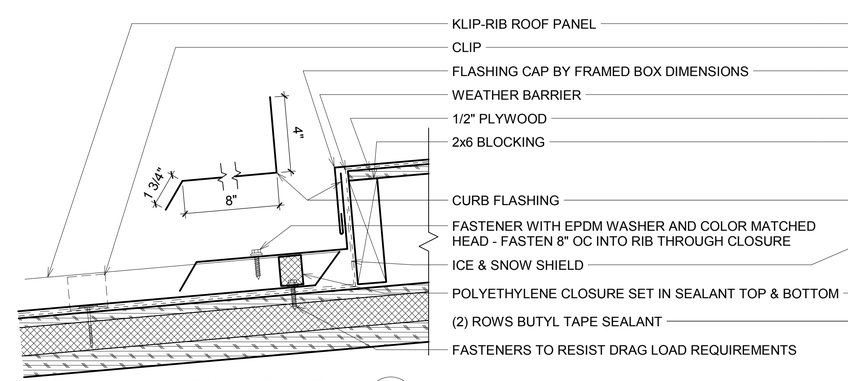

A - DOWNHILL CURB FLASHING
3" = 1'-0"
6
AD107 AD107

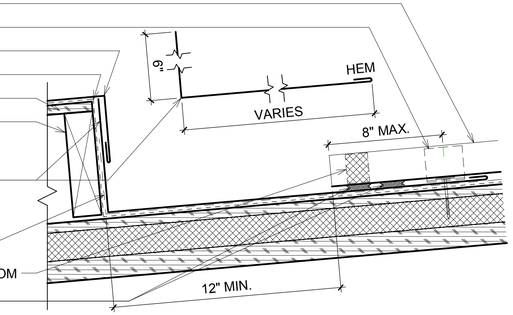

C - UPHILL CURB FLASHING
3" = 1' - 0"
8
AD107 AD107

3" = 1'-0" 9" 6" 0 3" 1'

PARTNERSHIP berger
1927 Post Alley, Ste. 2
Seattle, WA 98101
206 325 6877
bergerpartnership.com

INNOVA architects
950 Pacific Avenue, Suite 450
Tacoma, WA 98402
253-572-4903

Totem Lake Park Phase 1
City of Kirkland
12031 Totem Lake Way, Kirkland, WA 98034

8404 REGISTERED ARCHITECT
GEOFFREY E. ANDERSON
STATE OF WASHINGTON

SET TYPE:
Bid Set

SET ISSUE DATE:
9/13/2019

REVISIONS:

Δ	DESCRIPTION	DATE

DRAWN/CHECKED:
GO GEA

SHEET NAME:
ROOF DETAILS

SHEET NUMBER:
AD107

Berger Partnership Project Number: XXXXXXXX.XX Plotted: 08.18.2011 5:18 PM By: Gennadiy Ogay Filename: p:\2017\17-116 totem lake splash pad (berger)\drawings\acad-totem lake park-ph1 - title block.dwg

SYMBOL LEGEND

SYMBOL	DESCRIPTION	SYMBOL	DESCRIPTION
	COLD WATER PIPING		MOTORIZED DAMPER
	HOT WATER PIPING	12X12 CD-1 / 100 27	DIFFUSER CALLOUT (SIZE, TYPE, CFM, 50 FPM THROW)
	HOT WATER RECIRCULATION PIPING	TI	TEMPERATURE GAUGE
	WASTE PIPING		RETURN/EXHAUST/TRANSFER AIRFLOW
	VENT PIPING		SUPPLY AIRFLOW
	PIPE OR DUCT BREAK (GRAPHIC ONLY - CONTINUOUS PIPE/DUCT)		STRAINER W/ BLOWDOWN VALVE & 3/4" HOSE CONNECTION
3"CO	FLUSH CLEANOUT OR SURFACE CLEANOUT		UNION
	VENT THROUGH ROOF		FLOOR DRAIN
	PRESSURE REDUCING VALVE		AUTOMATIC OR MANUAL AIR VENT
	CHECK VALVE		BALANCING VALVE
	BALL VALVE	BFP	BACKFLOW PREVENTER ASSEMBLY
	PUMP		CIRCUIT SETTER
	PIPE REDUCER		

ABBREVIATION LIST

ADA	AMERICANS WITH DISABILTIES ACT
AMP	AMPERES
BFP	BACKFLOW PREVENTER
BTU	BRITISH THERMAL UNIT
CFM	CUBIC FEET PER MINUTE
CO	CLEANOUT
CV	COEFFICIENT OF FLOW
CW	COLD WATER
DC	DOUBLE CHECK
DEG	DEGREE
EA	EXHAUST AIR
EC	ELECTRICAL CONTRACTOR
ENTH	ENTHALPY
ERV	ENERGY RECOVERY VENTILATOR
ESP	EXTERNAL STATIC PRESSURE
ET	EXPANSION TANK
FCO	FLUSH CLEANOUT
FD	FLOOR DRAIN
FPM	FEET PER MINUTE
FT	FEET
FU	FIXTURE UNITS
GAL	GALLON
GPD	GALLONS PER DAY
GPF	GALLONS PER FLUSH
GPH	GALLONS PER HOUR
GPM	GALLONS PER MINUTE
H	HEIGHT
HB	HOSE BIBB
HP	HORSEPOWER
HW	HOT WATER
IE	INVERT ELECATION
IN	INCH
INDW	INDIRECT WASTE
KW	KILOWATT
L	LENGTH
LBS	POUNDS
MAX	MAXIMUM
MCA	MINIMUM CIRCUIT AMPACITY
MFG	MANUFACTURER
MIN	MINIMUM
MOCP	MAXIMUM OVERCURRENT PROTECTION
MRT	MEAN TEMPERATURE RATING
N/A	NOT APPLICABLE
NPR	NET PUMP SUCTION HEAD REQUIRED
PB	PRESSURE BALANCE
PD	PRESSURE DROP
PH	PHASE
PRV	PRESSURE REDUCING VALVE
PSI	POUNDS PER SQUARE INCH
PVC	POLYVINYL CHLORIDE
RP	REDUCED PRESSURE
RPM	REVOLUTIONS PER MINUTE
SQ FT	SQUARE FOOT
TEMP	TEMPERATURE
TS	THERMOSTATIC
TV	TEMPERING VALVE
TW	TEMPERED WATER
TYP	TYPICAL
UH	UNIT HEATER
V	VENT
VFD	VARIABLE FREQUENCY DRIVE
VOLT	VOLTAGE
VTR	VENT THROUGH ROOF
W	WATT
W	WIDTH
W/	WITH
WC	WATER CLOSET

GENERAL NOTES

1. PROVIDE SYSTEM STARTUP, ADJUSTMENTS, AND DOCUMENTATION TO MEET MINIMUM REQUIREMENTS OF THE 2015 WASHINGTON STATE ENERGY CODE - COMMERCIAL PROVISIONS SECTION C408.
2. OBTAIN AND PAY FOR ALL PERMITS AND CONSTRUCTION FEES. FURNISH FINAL CERTIFICATE TO OWNER SHOWING COMPLIANCE WITH CODE REQUIREMENTS
3. LOCATE ALL VALVES, TRAPS, TEST PORTS, DAMPERS, CONTROLS, CLEANOUTS, ETC. TO BE ACCESSIBLE FOR MAINTENANCE, ADJUSTMENT, & TESTING. PROVIDE ACCESS PANELS FOR ALL CONCEALED DEVICES.
4. CONSTRUCT DUCTWORK ACCORDING TO WASHINGTON STATE ENERGY CODE SECTION C403.2.8.
5. PROVIDE EACH ZONE WITH THERMOSTATIC CONTROLS THAT PROVIDE A DEADBAND OF AT LEAST 5 DEGREES FAHRENHEIT IN WHICH HEATING AND COOLING ENERGY IS CAPABLE OF BEING SHUT OFF OR REDUCED TO A MINIMUM. THERMOSTATS SHALL BE CAPABLE OF THERMOSTATIC SETBACK, AUTOMATIC SETBACK AND SHUTDOWN, AND AUTOMATIC START CAPABILITIES PER WASHINGTON STATE ENERGY CODE SECTION C403.2.4.2.
6. PROVIDE MOTORIZED DAMPERS ON OUTDOOR AIR SUPPLY, EXHAUST OPENINGS, AND RELIEF OUTLETS. DAMPERS SHALL HAVE A MAXIMUM LEAKAGE RATE OF 20 CFM PER SQUARE FOOT AT 1" W.C. DAMPERS SMALLER THAT 24" IN EITHER DIRECTION SHALL HAVE A MAXIMUM LEAKAGE RATE OF 40 CFM PER SQUARE FOOT AT 1" W.C.
7. PROVIDE BALANCING DEVICES ON ALL NEW AIR INLETS AND OUTLETS AND OUTSIDE AIR DUCT SECTIONS.
8. AIR INLET AND OUTLET SIZES SHOWN ON PLANS ARE NECK SIZES. PROVIDE ADDITIONAL PANS, HARDWARE, ETC, REQUIRED TO INSTALL AIR INLETS AND OUTLETS.
9. DUCTWORK SHALL BE 2.0" PRESSURE CLASS UNLESS OTHERWISE NOTED ON THESE DRAWINGS.
10. TOTAL STATIC PRESSURE NOTED IN SCHEDULES SHALL BE ASSUMED TO INCLUDE DUCT SYSTEM, TERMINAL UNITS, FILTERS, COILS, ETC.
11. ALL PRESSURES LISTED ARE GAGE PRESSURES UNLESS OTHERWISE NOTED.
12. THE FIRST FIGURE OF DUCT SIZE CALLOUTS INDICATES DIMENSION OF FACE SHOWN OR INDICATED. DUCT SIZES ARE NET INSIDE DIMENSIONS. PROVIDE ANY APPLICABLE DUCT LINING AND INSULATION PER THESE PLANS AND SPECIFICATIONS.
13. HOT WATER DISCHARGE TEMPERATURE OF PUBLIC LAVATORIES SHALL BE 104 DEGREES FAHRENHEIT.
14. ALL SERVICE HOT WATER PIPING SYSTEMS SHALL CONFORM TO THE MAXIMUM PIPE LENGTH PER THE 2015 WASHINGTON STATE ENERGY CODE TABLE C404.3.1.
15. HOT WATER CIRCULATION SYSTEM SHALL HAVE CONTROL CAPABILITIES TO AUTOMATICALLY START THE CIRCULATION PUMP BASED ON DEMAND FOR HOT WATER AND SHUT-OFF PUMP WHEN THERE IS NO DEMAND AND WHEN THE DESIRED WATER TEMPERATURE IS MET PER 2015 WASHINGTON STATE ENERGY CODE SECTION C404.7.1.
16. SEISMIC PROVISIONS ARE REQUIRED - REFER TO SPECIFICATIONS.
17. COORDINATE ALL MECHANICAL WORK WITH OTHER TRADES TO INSURE PROPER AND ADEQUATE INTERFACE OF THEIR WORK WITH THE WORK OF MECHANICAL CONTRACTOR. PROVIDE COORDINATED SHOP DRAWINGS FOR APPROVAL PRIOR TO FABRICATION AND INSTALLATION.
18. ALL ELECTRICAL WORK SHALL BE PERFORMED IN ACCORDANCE WITH NFPA 70 STANDARDS AND LOCAL REQUIREMENTS.
19. ALL FIELD WIRING SHALL REQUIRE AN ELECTRICAL PERMIT AND SHALL BE PERFORMED BY A LICENSED ELECTRICIAN.
20. A SHORT DASH IN A SCHEDULE TABLE CELL INDICATES THAT THE COLUMN HEADING IS NOT USED OR NOT APPLICABLE TO THAT SCHEDULED ITEM.
21. CONTRACTOR SHALL COORDINATE WITH LOCAL JURISDICTIONS (INCLUDING BUT NOT LIMITED TO BUILDING DEPARTMENT, SEWER UTILITY, ETC.) FOR ALL REQUIRED INSPECTIONS PRIOR TO PERFORMING WORK.
22. PROVIDE P-TRAPS AT EACH DRAIN CONNECTION TO SANITARY SEWER SYSTEM. PROVIDE TRAP PRIMERS & HEAT TRACE FOR ALL P-TRAPS.

PARTNERSHIP berger
1927 Post Alley, Ste. 2
Seattle, WA 98101
206.325.6877
bergerpartnership.com

HOOD RIVER ENGINEERS
DESIGNED RIGHT. BUILT ONCE.
1984 MACHEA
SUITE 200
DUPONT, WA 98327
PH (541) 436-4723
www.hoodriverengineers.com

Totem Lake Park Phase 1

City of Kirkland

21031 Totem Lake Way, Kirkland, WA 98034

Marcia L Karr, PE 360-918-0938
2019.09.03 11:11:53-07'00'

SET TYPE:
BID SET

SET ISSUE DATE:
09/13/2019

REVISIONS:

Δ	DESCRIPTION	DATE

DRAWN/CHECKED:
CN / JB

SHEET NAME:
MECHANICAL GENERAL INFORMATION

SHEET NUMBER:
M001

Berger Partnership Project Number: 19-064
Plotted: 9/3/2019 9:14:56 AM
Filename: C:\Users\karis\Documents\17031 Totem Lake (2018)_Central_dave3VHC.rvt

PIPE HANGER SCHEDULE

PIPE TYPE	SIZE	HORIZONTAL SPACING	VERTICAL SPACING	NOTES
CAST IRON WITH COMPRESSION GASKET JOINTS	ALL	EVERY OTHER JOINT UNLESS OVER 4 FT, THEN SUPPORT EACH JOINT	BASE AND EACH FLOOR, 15 FT MAX	1
CAST IRON (HUBLESS) WITH SHIELDED COUPLING JOINTS	ALL	EVERY OTHER JOINT UNLESS OVER 4 FT, THEN SUPPORT EACH JOINT	BASE AND EACH FLOOR, 15 FT MAX	1,2
COPPER TUBE AND PIPE WITH SOLDERED OR BRAZED JOINTS	1-1/2" AND SMALLER	6 FT	EACH FLOOR, 10 FT MAXIMUM	
	2" AND LARGER	10 FT	EACH FLOOR, 10 FT MAXIMUM	
SCHEDULE 80 PVC PIPE, 60-100 DEG F OPERATING TEMPERATURE	1" AND SMALLER	4-1/2 FT	-	
	1-1/4" - 3"	5-1/2 FT	-	
	4" - 8"	7-1/2 FT	-	
	10" AND LARGER	10 FT	-	
SCHEDULE 40 PVC AND ABS DWV PIPE WITH SOLVENT CEMENTED JOINTS	ALL	4 FT	BASE AND EACH FLOOR	3,4
COPPER PIPING WITH MECHANICAL JOINTS	1" AND SMALLER	6 FT	10 FT	
	1-1/4" TO 2-1/2"	10 FT	10 FT	
PEX-A PIPING, RIGID	ALL	5 FT	10 FT	
PEX-A PIPING, FLEXIBLE	ALL	5 FT	5 FT	

NOTES:

1. WHERE 10' PIPE SECTIONS ARE USED HORIZONTALLY, 10 ' HORIZONTAL SPACING, SUPPORT WITHIN 18" OF EACH JOINT AND AT EACH HORIZONTAL BRANCH CONNECTION. BRACE AT EVERY 40'.
2. HANGERS SHALL NOT BE PLACED ON THE COUPLING.
3. ALLOW FOR EXPANSION EVERY 30 FT.
4. FOR VERTICAL PIPE, PROVIDE MID-STORY GUIDES.

PLUMBING FIXTURE SCHEDULE

SYMBOL	FIXTURE	MANUFACTURER	MODEL	PLUMBING CONNECTIONS (IN)						FLOW		ELECTRICAL			MOUNTING	NOTES
				WASTE	INDW	VENT	HW	CW	TW	GPM	GPF	VOLT	PH	W		
FD-1	FLOOR DRAIN	JR SMITH	2010	3.00	-	2.00	-	-	-	-	-	-	-	-	FLOOR	2
HB-1	HOSE BIBB	ZURN	Z1341-P34	-	-	-	-	0.75	-	-	-	-	-	-	PIPE	
HB-2	HOSE BIBB	ZURN	Z1320-C-34EL-CL-SS-WC	-	-	-	-	0.75	-	-	-	-	-	-	WALL	2
HB-3	HOSE BIBB	ZURN	Z1330-C	-	-	-	-	0.75	-	-	-	-	-	-	WALL	2
P-1	WATER CLOSET	ACORN	2100-W-1-1.28-FVBO-HS-OFLC-ADA-CN	3.00	-	2.00	-	1.50	-	-	1.28	-	-	-	WALL	1,2,4
	SEAT	ACORN	HS-OFLC													
	FLUSH VALVE	SLOAN	CX-8158-1.28-SF-OR													
	CARRIER	JR SMITH														
P-2	LAVATORY	ACORN	1953-ADA-1-9-H1-GT-TE	2.00	-	2.00	-	-	0.50	0.50	-	-	-	-	WALL	1,2,4
	FAUCET	SLOAN	EBF-650-BAT-TEE-SF-0.5GPM-MLM-IR-FCT													
	CARRIER	JR SMITH														
P-3	DRINKING FOUNTAIN	HAWS	1119FR	(2) 2.00	-	(2) 1.50	-	0.50	-	0.45	-	-	-	-	WALL	2,3
P-3A	PET FOUNTAIN	TERRABOUND SOLUTIONS	9004-MWL	2.00	-	2.00	-	0.50	-	-	-	-	-	-	WALL	2
P-4	JANITORS SINK	ACORN	TSH3624-BDS-KDG3-KFC-KH36-KMH-KWG-2	3.00	-	2.00	0.75	0.75	-		-	-	-	-	FLOOR	
	FAUCET	ACORN													WALL	

NOTES:

1. SENSOR OPERATED WITH BATTERY POWER.
2. PROVIDE WITH VANDAL-RESISTANT HARDWARE.
3. PROVIDE WITH HAWS 1920FR FREEZE RESISTANT BOTTLE FILLER, HAWS BP32 WALL PLATE, HAWS 6700.4L & 6700.4 BACKING PLATES.
4. INSTALL IN ACCORDANCE WITH ADA REQUIREMENTS.

AIR INLET & OUTLET SCHEDULE

SYMBOL	MANUFACTURER	MODEL	MOUNTING TYPE	STYLE	NOTES
EG-1	TITUS	50F	DUCT/WALL	EGGCRATE	1
SD-1	TITUS	300RS	DUCT/WALL	GRILLE	1

NOTES:

1. PROVIDE AIR BALANCING DEVICE AT EACH AIR INLET AND OUTLET.

ELECTRIC UNIT HEATER SCHEDULE

SYMBOL	MANUFACTURER	MODEL	CFM	HEATER	ELECTRICAL			WEIGHT	NOTES
				W	VOLT	PHASE	AMPS	(LBS)	
UH-1	KING	KCV1209	-	840	120	1	7	11.2	3
UH-2	KING	KCV1212	-	1125	120	1	9.4	16.8	2
UH-3	KING	KCV1212	-	1125	120	1	9.4	16.8	3
UH-4	TRANE	UHWA021A	245	2000	208	1	-	41	1, 4

NOTES:

1. UNIT TO BE PROVIDED WITH INTEGRAL THERMOSTATS.
2. UNIT TO BE PROVIDED WITH SINGLE POLE RIGHT SIDE WIRING THERMOSTAT.
3. UNIT TO BE PROVIDED WITH SINGLE POLE LEFT SIDE WIRING THERMOSTAT.
4. TOP OF UNIT HEATER TO BE INSTALLED AT 6'-0" ABOVE FINISHED FLOOR. COORDINATE EXACT LOCATION WITH ELECTRICAL EQUIPMENT.

TEMPERING VALVE SCHEDULE

SYMBOL	MANUFACTURER	MODEL	TYPE		LINE SIZE (IN)			CV	FLOW (GPM)		OUTLET	SERVICE	WEIGHT	NOTES
			TS	PB	INLET	OUTLET	PRV		MIN	MAX	TEMP (°F)		(LBS)	
TV-1	SYMMONS	MAXLINE 7-225	X	-	0.50	0.50	-	-	1	14	104	RESTROOM LAVATORY	-	

NOTES:

ELECTRIC WATER HEATER SCHEDULE

SYMBOL	MANUFACTURER	MODEL	TYPE	SERVICE	CAPACITY	DISCHARGE	RECOVERY		ELECTRICAL			NOTES
					(GAL)	TEMP (DEG F)	GPH	TEMP RISE	VOLT	PHASE	KW	
WH-1	BRADFORD WHITE	LE112WV3-1	TANK	DOMESTIC HW	12	120	12.29	100	208	1	3.00	1, 2

NOTES:

1. PROVIDE WITH WALL MOUNTING HARDWARE, DRAIN PAIN, SEISMIC RESTRAINTS, & TEMPERATURE/PRESSURE RELIEF VALVE.
2. WALL MOUNT CONFIGURATION WITH BOTTOM PIPE CONNECTIONS.

PIPE INSULATION SCHEDULE

APPLICATION	TEMP RANGE	INSULATION CONDUCTIVITY		NOMINAL PIPE SIZE (IN)					TYPE	NOTES
	(°F)	CONDUCTIVITY BTU X IN/(H X FT² X °F)	MRT (°F)	<1"	1" - 1-1/4"	1-1/2" - 3"	4" - 8"	≥8"		
CW	40-60	0.21-0.27	75	0.5	0.5	1.0	-	-	FIBERGLASS W/ ASJ	1,2,3
HW, HWC, TW	90-105	0.21-0.28	100	1.0	1.0	1.5	-	-	FIBERGLASS W/ ASJ	1,2,3

GENERAL NOTES:

1. INSULATION THICKNESSES PER 2015 WASHINGTON STATE ENERGY CODE TABLE C403.2.9.
2. PROVIDE WITH PVC JACKETING IN ALL EXPOSED LOCATIONS (UTILITY ROOMS, STORAGE ROOMS, ETC.).
3. PROVIDE WITH ALUMINUM JACKETING IN ALL OUTDOOR LOCATIONS.

DUCT HANGER SCHEDULE

DUCT SIZE		MAX SPACING	WIRE DIA	ROD	STRAP	NOTES
DIAMETER (IN)	RECT PERIMETER / 2 (IN)	(FT)	(GA)	(IN)		
10 AND DOWN	-	12	12	0.250	1" X 22 GA	1,2,3, 4
-	30 AND DOWN	10	10	0.135	1" X 22 GA	1,2,3, 4
-	30 AND DOWN	5	12	0.106	1" X 22 GA	1,2,3, 4

NOTES:

1. MINIMUM HANGER SIZE AND MAXIMUM HANGER SPACING PER SMACNA TABLE 5-1 AND 5-2.
2. HORIZONTAL DUCT SHALL HAVE A SUPPOST WITHIN 2 FEET OF EACH ELBOW AND WITHIN 4 FEET OF EACH BRANCH INTERSECTION.
3. SINGLE HANGER MAXIMUM ALLOWABLE LOAD FOR STRAPS IS: 1" X 22 GA - 260 LBS, 1" X 20 GA - 320 LBS, 1" X 18 GA - 420 LBS.
4. SINGLE HANGER MAXIMUM ALLOWABLE LOAD FOR ROD DIAMETER IS: 0.106" - 80 LBS, 0.135" - 120 LBS, 0.162" - 160 LBS, 0.25" - 270 LBS, 0.375" - 680 LBS.

EXPANSION TANK SCHEDULE

SYMBOL	MANUFACTURER	MODEL	TYPE	CONFIGURATION	PRESSURE	VOLUME (GAL)		WEIGHT	NOTES
					(PSI)	TOTAL	ACCEPTANCE	(LBS)	
ET-1	AMTROL	ST-5	DIAPHRAGM	VERTICAL	150	2.00	0.90	12.5	1

NOTES:

1. PROVIDE WITH WALL MOUNTING STRAPS.

BACKFLOW PREVENTER SCHEDULE

SYMBOL	MANUFACTURER	MODEL	LINE	SERVICE	TYPE		WATER PRESSURE (PSI)		WEIGHT	NOTES
			SIZE (IN)		RP	DC	INLET	OUTLET	(LBS)	
BFP-1	WATTS	009 SERIES	1.50	DOMESTIC CW	X	X	-	-	-	1, 2

NOTES:

1. PROVIDE WITH WYE-STRAINER, ISOLATION VALVES, & TEST PORTS.
2. PROVIDE WITH SEPARATE PRESSURE REDUCING VALVE.

WEATHERPROOF LOUVER SCHEDULE

SYMBOL	MANUFACTURER	MODEL	CFM	SIZE (IN)		DEPTH	FREE AREA		MAX PD	VELOCITY	NOTES
				L	W	(IN)	%	SQ FT	(IN)	(FPM)	
L-1	GREENHECK	BVE	200	16.00	7.75	4.00	50.00	0.43	0.08	650	
L-2	GREENHECK	BVE	200	16.00	7.75	4.00	50.00	0.43	0.08	650	

NOTES:

ENERGY RECOVERY VENTILATOR SCHEDULE

SYMBOL	MANUFACTURER	MODEL NUMBER	CORE TYPE	AIRFLOW (CFM)	ESP (INWG)	RECOVERY EFFECIENCY			ELECTRICAL						WEIGHT (LBS)	NOTES
						TEMP. RECOVERY	ENTH. COOLING	ENTH. HEATING	VOLT	PHASE	HP	AMP	MCA	MOCP		
ERV-1	MITSUBISHI	LGH-F300RX5-E1	CROSS FLOW	200	0.28	71.00%	55.00%	68.00%	208	1	0.52	0.32 - 1.35	1.8	15	73	1, 2

NOTES:

1. OUTSIDE AND EXHAUST AIR DUCTS SHALL HAVE MOTORIZED DAMPERS THAT SHALL OPEN UPON ACTIVATION AND CLOSE UPON UNIT SHUTDOWN.
2. UNIT SHALL BE INSTALLED AND SUPPORTED IN ACCORDANCE WITH MANUFACTURER'S INSTRUCTIONS AND DETAILS PROVIDED WITHIN THESE DOCUMENTS.

DUCT INSULATION & LINING SCHEDULE

APPLICATION	R-VALUE	K-VALUE	NRC	THICKNESS	INSULATION LOCATION		TYPE	NOTES
	(MIN)	(MAX)	(MIN, 1")	(IN)	INSIDE DUCT	OUTSIDE DUCT		
OUTSIDE AIR DUCTWORK INSULATION	7	0.25	-	2.00	-	X	FLEXIBLE FIBERGLASS	1,2
SUPPLY DUCTWORK INSULATION	7	0.25	-	2.00	-	X	FLEXIBLE FIBERGLASS	1,2
RETURN/EXHAUST DUCTWORK INSULATION	7	0.25	-	2.00	-	X	FLEXIBLE FIBERGLASS	1,2
DUCT LINING - WITHIN 10' OF EXHAUST FAN	-	0.25	0.55	1.00	X	-	CLOSED-CELL ELASTOMERIC	

NOTES:

1. INSULATION THICKNESSES PER 2015 WASHINGTON STATE ENERGY CODE SECTION C402.2.8.
2. PROVIDE WITH VAPOR BARRIER JACKETING.

PUMP SCHEDULE

SYMBOL	MANUFACTURER	MODEL	SERVICE	TYPE	FLOW		HEAD	NPSHR	RPM	ELECTRICAL					STARTER				MOUNTING	WEIGHT	NOTES
					GPM	GPD	(FT)	(FT)		HP	W	AMP	VOLT	PHASE	VFD	MFG	EC	N/A		(LBS)	
CP-1	GRUNDFOS	UP 15-18 B5	HW RECIRCULATION	INLINE	4	-	6	-	-	-	86.00	-	120	1	-	-	-	X	INLINE	6	1

NOTES:

1. PROVIDE WITH AQUASTAT, TIMER, & MOTOR RATED SWITCH FOR CONTROL.

berger PARTNERSHIP
1927 Post Alley, Ste. 2
Seattle, WA 98101
206 325 6877
bergerpartnership.com

HOOD RIVER ENGINEERS
DESIGNED RIGHT. BUILT ONCE.
1584 MCNEIL
SUITE 200
DUPONT, WA 98327
PH (541) 436-4723
www.hoodriverengineers.com

Totem Lake Park Phase 1
City of Kirkland
21031 Totem Lake Way, Kirkland, WA 98034

Marcia L Karr, PE
360-918-6938
2019.09.03
11:12:09-07'00'

SET TYPE:
BID SET

SET ISSUE DATE:
09/13/2019

REVISIONS:

Δ	DESCRIPTION	DATE

DRAWN/CHECKED:
CN / JB

SHEET NAME:
SCHEDULES

SHEET NUMBER:
M002

Berger Partnership Project Number: 19-064
Plotted: 9/3/2019 9:14:56 AM
Filename: C:\Users\karis\Documents\17031 Totem Lake (2018)_Central_dave3VVHC.rvt

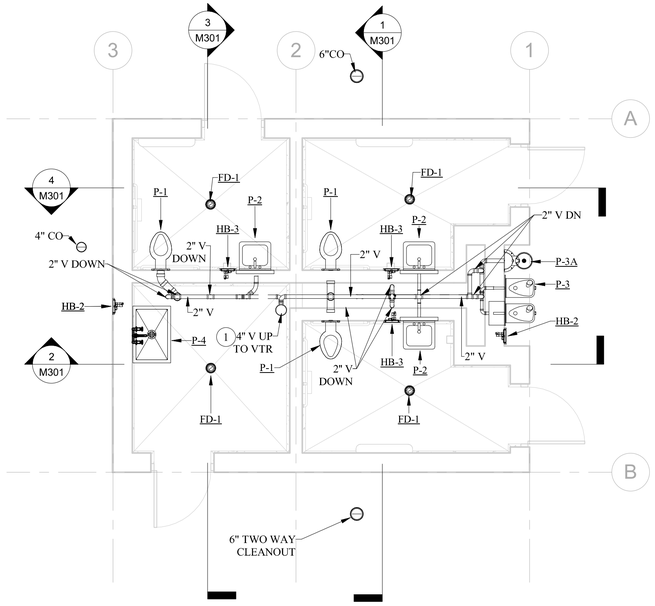

MECHANICAL ROOM ABOVE GRADE SANITARY PLUMBING FLOOR PLAN

4

SCALE: 1/4" = 1'-0"

0 4' 8' 16'

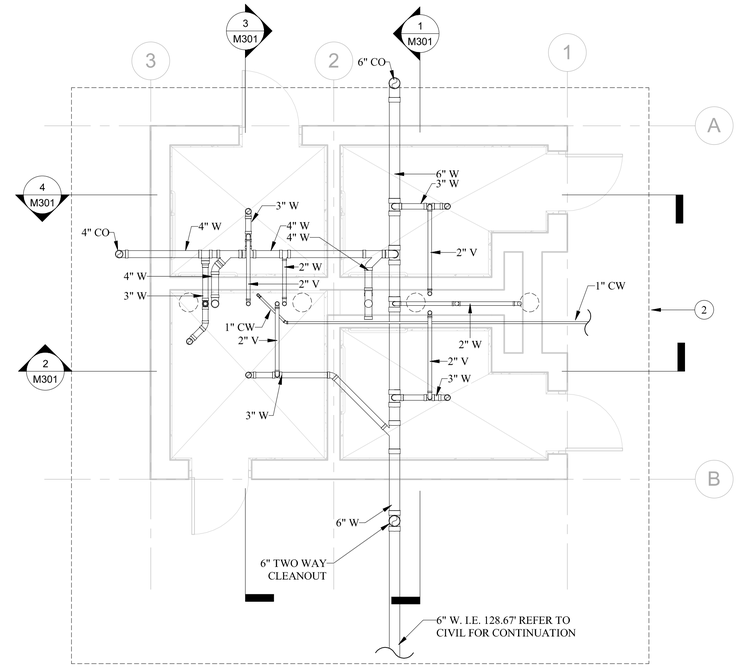

MECHANICAL ROOM BELOW GRADE PLUMBING FLOOR PLAN

3

SCALE: 1/4" = 1'-0"

0 4' 8' 16'

PLAN NOTES

1 REFER TO ARCHITECTURAL DETAIL AD107/5.

2 ALL BELOW GRADE PIPING SHALL BE SUPPORTED BY HANGERS ATTACHED TO THE STRUCTURAL FLOOR USING HANGERS. PIPING AND HANGERS SHALL BE SET IN PLACE PRIOR TO BACKFILL AND SLAB INSTALLATION.

3 PROVIDE MOTORIZED DAMPER INTERLOCKED WITH ERV-1. DAMPER SHALL OPEN WHEN ERV-1 IS ACTIVATED ABD SHALL AUTOMATICALLY CLOSE WHEN THE UNIT IS DEACTIVATED.

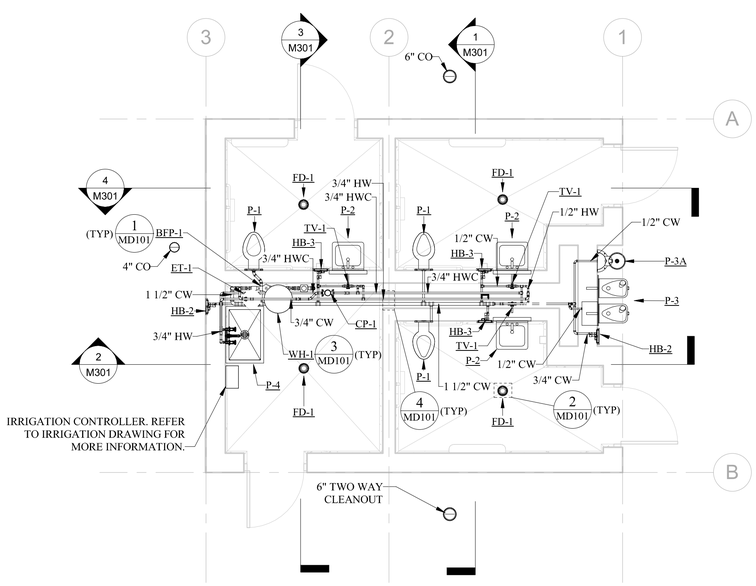

MECHANICAL ROOM PLUMBING FLOOR PLAN

2

SCALE: 1/4" = 1'-0"

0 4' 8' 16'

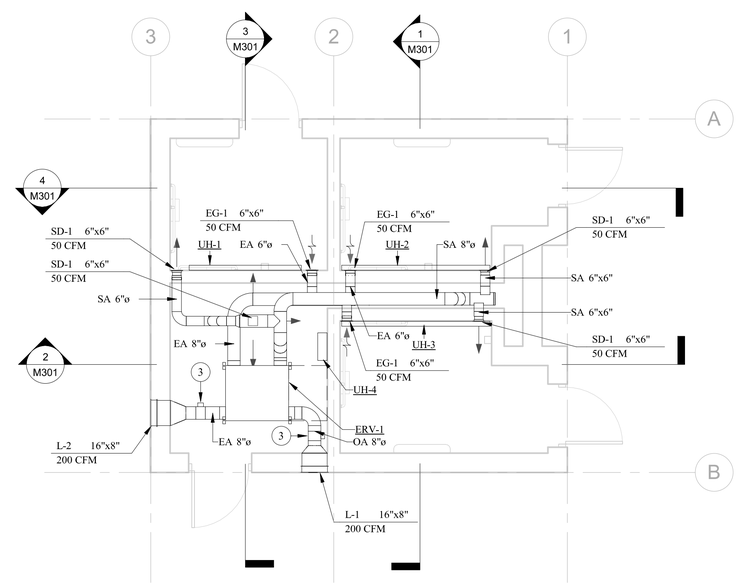

MECHANICAL ROOM HVAC FLOOR PLAN

1

SCALE: 1/4" = 1'-0"

0 4' 8' 16'

PARTNERSHIP berger
1927 Post Alley, Ste. 2
Seattle, WA 98101
206 325 6877
bergerpartnership.com

HOOD RIVER ENGINEERS
DESIGNED RIGHT. BUILT ONCE.
1284 MACHES
SUITE 200
DUPONT, WA 98327
PH (541) 436-4723
www.hoodriverengineers.com

Totem Lake Park Phase 1

City of Kirkland

21031 Totem Lake Way, Kirkland, WA 98034

Marcia L Karr, PE 360-918-6938
2019.09.03
11:12:26-07'00'

SET TYPE:
BID SET

SET ISSUE DATE:
09/13/2019

REVISIONS:

Δ	DESCRIPTION	DATE

DRAWN/CHECKED:
KT / JB

SHEET NAME:
BUILDING MECHANICAL PLANS

SHEET NUMBER:
M101

Plotted: 9/3/2019 9:14:59 AM Filename: C:\Users\kers\Documents\17031 Totem Lake (2018)_Central_dave3VHC.rvt

Berger Partnership Project Number: 19-064

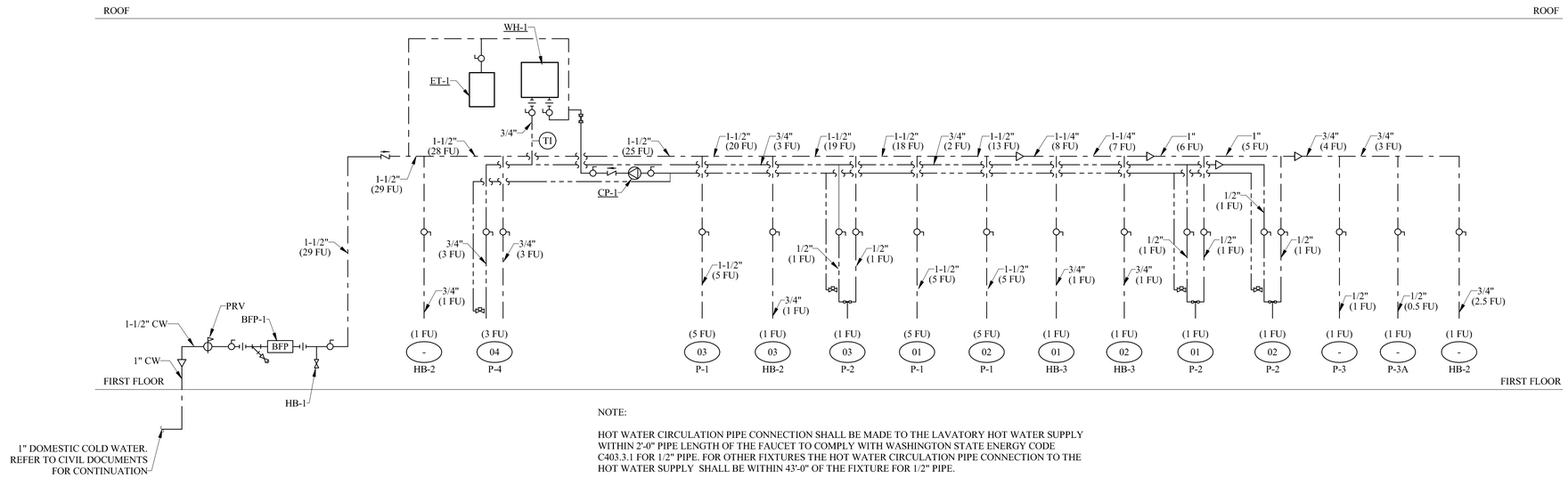

NOTE:

HOT WATER CIRCULATION PIPE CONNECTION SHALL BE MADE TO THE LAVATORY HOT WATER SUPPLY WITHIN 2'-0" PIPE LENGTH OF THE FAUCET TO COMPLY WITH WASHINGTON STATE ENERGY CODE C403.3.1 FOR 1/2" PIPE. FOR OTHER FIXTURES THE HOT WATER CIRCULATION PIPE CONNECTION TO THE HOT WATER SUPPLY SHALL BE WITHIN 43'-0" OF THE FIXTURE FOR 1/2" PIPE.

3 DOMESTIC PLUMBING RISER

SCALE: NONE

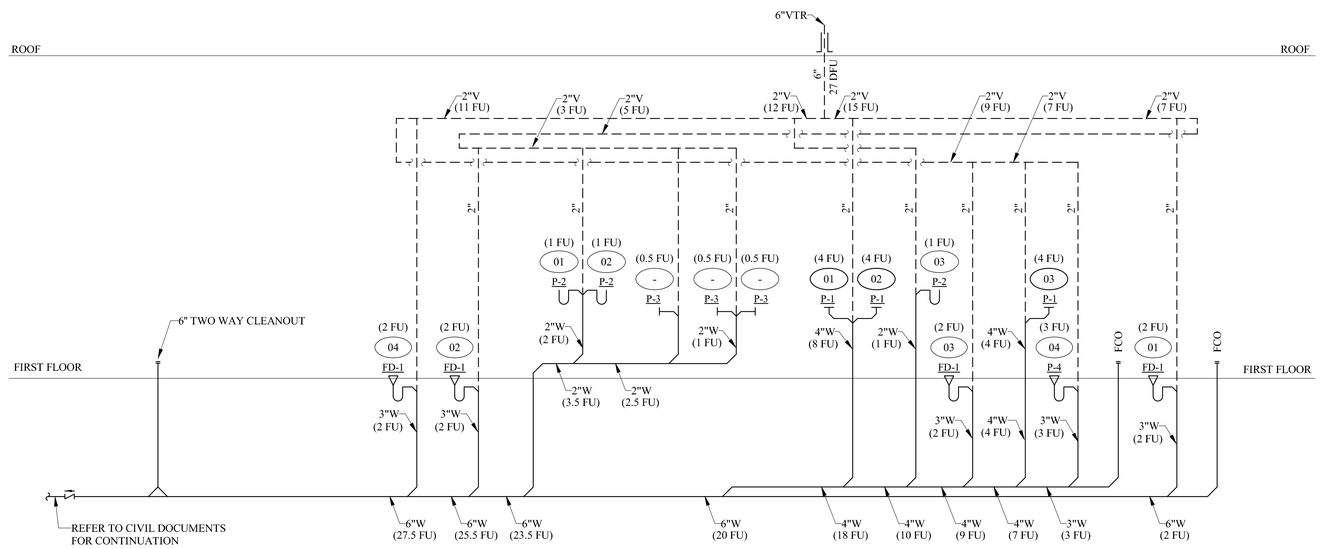

1 WASTE RISER DIAGRAM

SCALE: NONE

berger PARTNERSHIP
1927 Post Alley, Ste. 2
Seattle, WA 98101
206.325.6977
bergerpartnership.com

HOOD RIVER ENGINEERS
Designed Right. Built Once.
1284 McCHES
SUITE 200
DUPONT, WA 98327
PH (541) 436-4723
www.hoodriverengineers.com

Marcia L Kar, PE 360-918-6938
2019.09.03 11:12:39-07'00'
MARCIA L. KARR
STATE OF WASHINGTON
PROFESSIONAL ENGINEER
EXPIRES 09-12-2020

Totem Lake Park Phase 1

City of Kirkland

21031 Totem Lake Way, Kirkland, WA 98034

SET TYPE:
BID SET

SET ISSUE DATE:
09/13/2019

REVISIONS:

Δ	DESCRIPTION	DATE

DRAWN/CHECKED:
CN / JB

SHEET NAME:
PLUMBING DIAGRAMS

SHEET NUMBER:
M201

Berger Partnership Project Number: 19-064
Plotted: 9/9/2019 9:15:00 AM
Filename: C:\Users\kars\Documents\17031 Totem Lake (2018)_Central_dave3VVHC.rvt

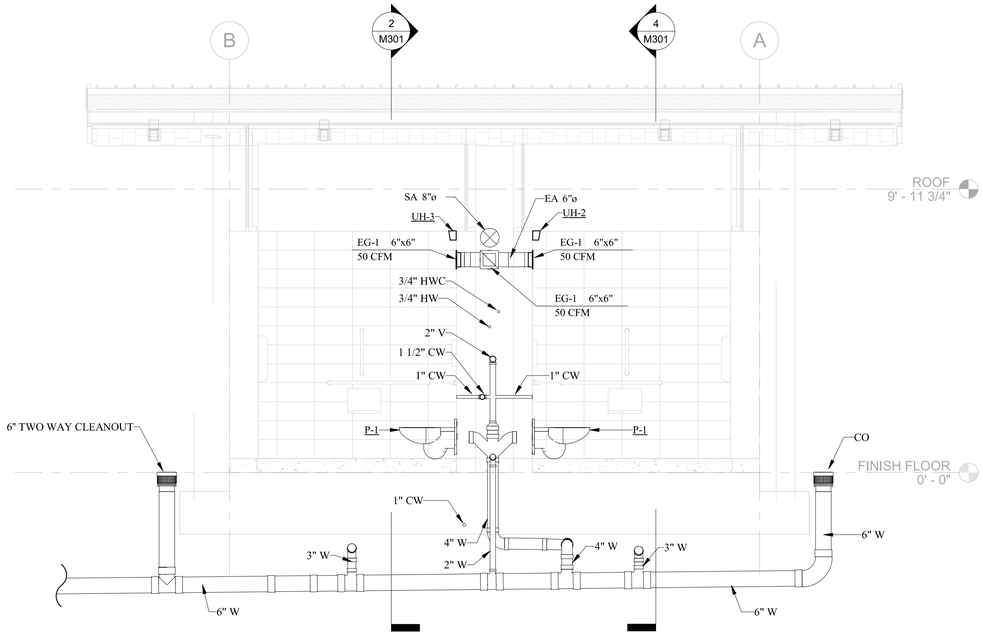

1 Section1

SCALE: 3/8" = 1'-0"

0 4' 8' 16'

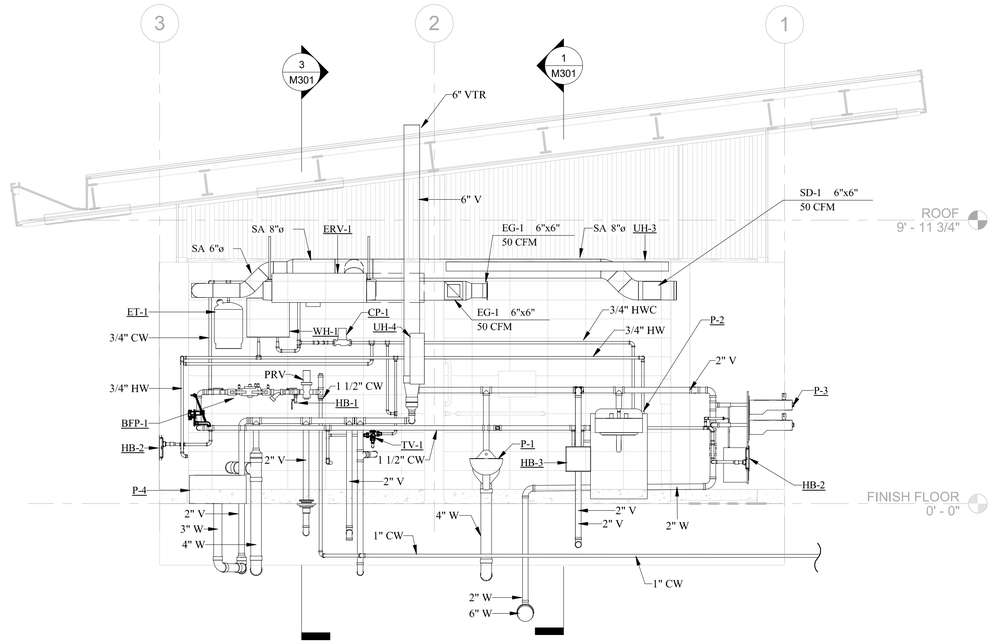

2 Section 2

SCALE: 3/8" = 1'-0"

0 4' 8' 16'

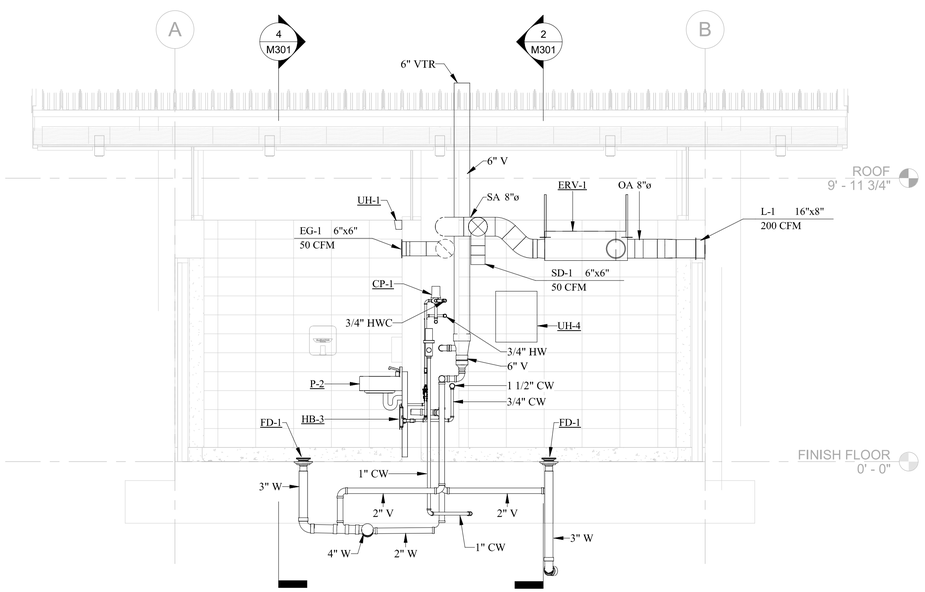

3 Section 3

SCALE: 3/8" = 1'-0"

0 4' 8' 16'

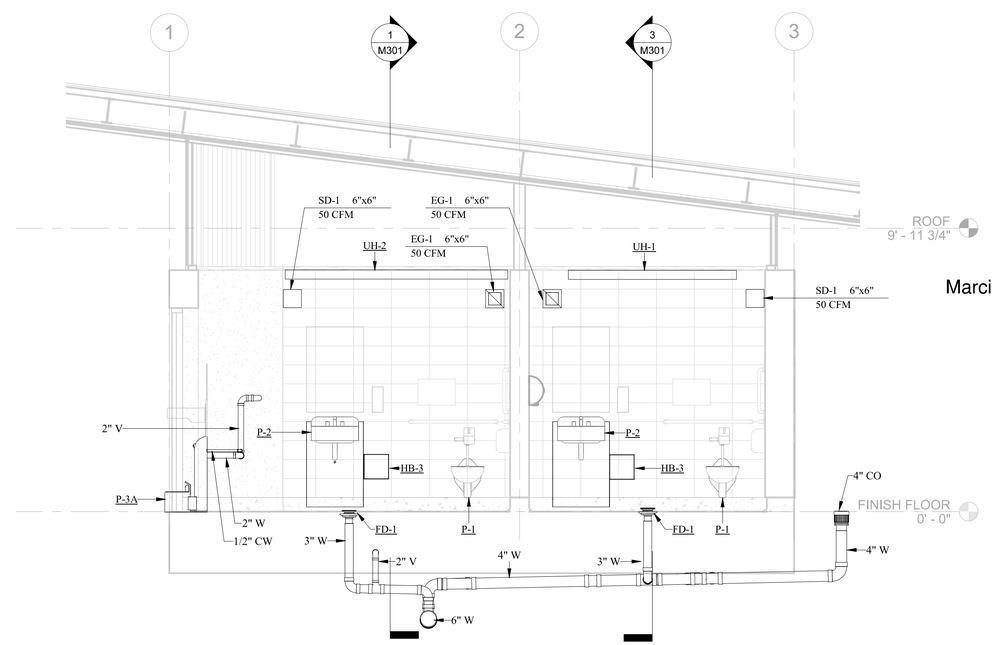

4 Section 4

SCALE: 3/8" = 1'-0"

0 4' 8' 16'

berger PARTNERSHIP
1927 Post Alley, Ste. 2
Seattle, WA 98101
206 325 6977
bergerpartnership.com

HOOD RIVER ENGINEERS
DESIGNED RIGHT. BUILT ONCE.
1984 MACHEA
SUITE 200
DUPONT, WA 98327
PH (541) 436-4723
www.hoodriverengineers.com

Totem Lake Park Phase 1

City of Kirkland

21031 Totem Lake Way, Kirkland, WA 98034

MARCIA L. KARR
STATE OF WASHINGTON
360-918-6938
PROFESSIONAL ENGINEER
EXPIRES 09-12-2020

Marcia L Karr, PE 2019.09.03 11:12:53-07'00'

SET TYPE:
BID SET

SET ISSUE DATE:
09/13/2019

REVISIONS:

Δ	DESCRIPTION	DATE

DRAWN/CHECKED:
KT / JB

SHEET NAME:
SECTIONS AND ELEVATIONS

SHEET NUMBER:
M301

Berger Partnership Project Number: 19-064
Plotted: 9/3/2019 9:15:02 AM
Filename: C:\Users\kairs\Documents\17031 Totem Lake (2018)_Central_dave3VHC.rvt

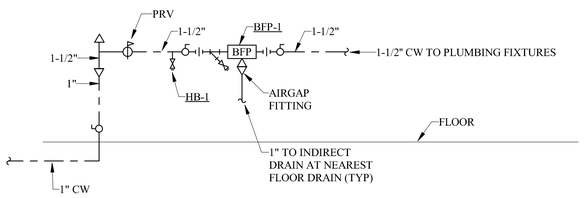

NOTE:

RACK-MOUNT ALL RISER COMPONENTS TO WALL.

1 BACKFLOW PREVENTER INSTALLATION

SCALE: NONE

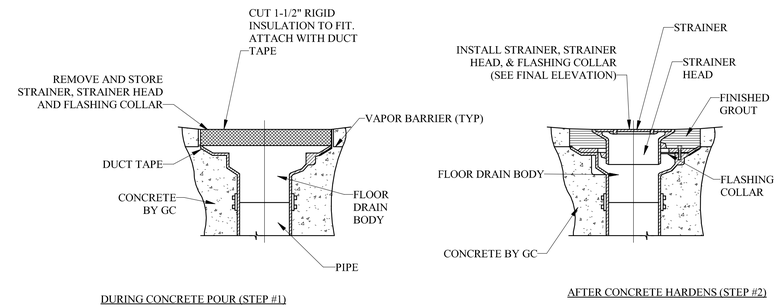

NOTE:

COMPLETE INSTALLATION OF FLOOR DRAIN AND SETTING OF FINAL ELEVATION SHALL NOT BE ALLOWED DURING INITIAL CONCRETE POUR

2 TYPICAL FLOOR DRAIN INSTALLATION DETAIL

SCALE: NONE

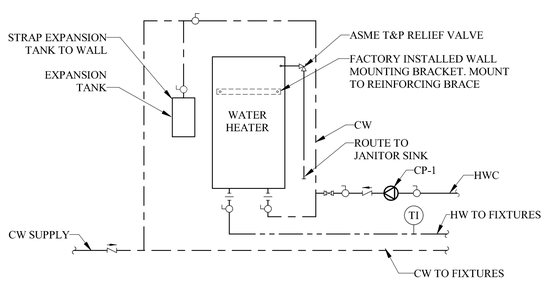

FINISHED FLOOR

3 Water Heater Detail

SCALE: NONE

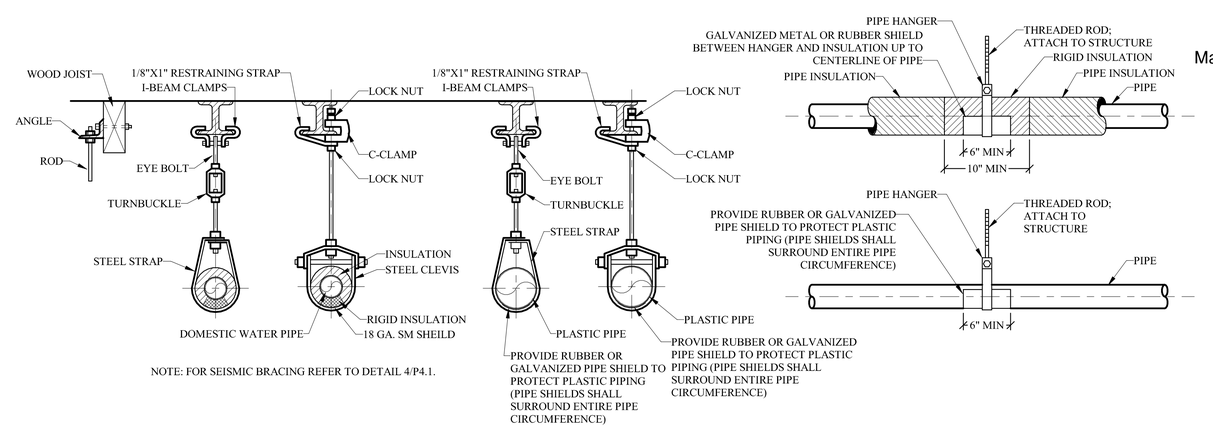

NOTE: FOR SEISMIC BRACING REFER TO DETAIL 4/P4.1.

4 PIPE SUPPORT

SCALE: NONE

PARTNERSHIP berger
1927 Post Alley, Ste. 2
Seattle, WA 98101
206.325.6877
bergerpartnership.com

HOOD RIVER ENGINEERS
DESIGNED RIGHT. BUILT ONCE.
1984 MCHEA
SUITE 200
DUPONT, WA 98327
PH (541) 436-4723
www.hoodriverengineers.com

Totem Lake Park Phase 1

City of Kirkland

21031 Totem Lake Way, Kirkland, WA 98034

MARCIA L. KARR
STATE OF WASHINGTON
REGISTERED PROFESSIONAL ENGINEER
EXPIRES 09-12-2020

Marcia L Karr, PE 360-918-6938
2019.09.03 11:13:07-07'00'

SET TYPE:
BID SET

SET ISSUE DATE:
09/13/2019

REVISIONS:

Δ	DESCRIPTION	DATE

DRAWN/CHECKED:
KT / JB

SHEET NAME:
DETAILS

SHEET NUMBER:
MD101

Berger Partnership Project Number: 19-064
Plotted: 9/3/2019 9:15:03 AM
Filename: C:\Users\karis\Documents\17031 Totem Lake (2018)_Central_dave3VHC.rvt

ELECTRICAL ABBREVIATIONS

ACPS	ACCESS CONTROL POWER SUPPLY
ACS	ACCESS CONTROL SYSTEM
AF	AMP FUSE
AFF	ABOVE FINISHED FLOOR DIRECTLY UNDER THE ITEM
AL	ALUMINUM
ALT	ALTERNATE
ANN	ANNUNCIATOR
ARCH	ARCHITECTURAL
ATS	AUTOMATIC TRANSFER SWITCH
BATT	BATTERY
BKBD	BACKBOARD
BOT	BOTTOM
BS	BACKSPLASH
C	CONDUIT
C3	CATEGORY 3
C5	CATEGORY 5
C5E	CATEGORY 5E
C6	CATEGORY 6
CAB	CABINET
CATV	COMMUNITY ANTENNA TELEVISION
CB	CIRCUIT BREAKER
CCT	CIRCUIT(S)
CCTV	CLOSED CIRCUIT TELEVISION
CLG	CEILING
CLK	CLOCK
CO	CONDUIT ONLY
COMM	COMMUNICATIONS
CONC	CONCRETE
CONT	CONTACTOR
CONTR	CONTRACTOR
COW	COMPUTER ON WHEELS
CPS	CAMERA POWER SUPPLY
CT	CURRENT TRANSFORMER
CTL	CONTROL
CU	COPPER
CWB	COLD WEATHER BALLAST
DCS	DOOR CONTROL SYSTEM
DDC	DIRECT DIGITAL CONTROL
DET	DETECTOR
DISC	DISTRIBUTION
DIV	DIVISION
DN	DOWN
DW	DISHWASHER
DX	DUPLEX
EA	EACH
EF	EXHAUST FAN
EHD	ELECTRIC HANDHAIR DRYER
ELEV	ELEVATION
EMCS	ENERGY MANAGEMENT & CONTROLS SYSTEM
EMER	EMERGENCY
EMS	ENERGY MANAGEMENT SYSTEM
EMT	ELECTRICAL METALLIC TUBING
ENCL	ENCLOSURE
EOLR	END OF LINE RESISTOR
EPO	EMERGENCY POWER OFF
EQP	EQUIPMENT
ER	TELECOMMUNICATIONS EQUIPMENT ROOM
EWC	ELECTRIC WATER COOLER
EXG	EXISTING
F	FUSE
F/SD	FIRE/SMOKE DAMPER
FA	FIRE ALARM
FAC	FIRE ALARM EXTENDER PANEL
FACP	FIRE ALARM CONTROL PANEL
FIX	FIXTURE
FLR	FLOOR
FMC	FLEXIBLE METAL CONDUIT
FO	FIBER-OPTIC
FSD	FAN SHUTDOWN
GCS	GATE CONTROL SYSTEM
GEN	GENERATOR
GFI	GROUND FAULT INTERRUPTER
GFP	GROUND FAULT PROTECTION
GND	GROUND
GRC	GALVANIZED RIGID STEEL CONDUIT
HT	HEIGHT
HTR	HEATER
HWT	WATER HEATER
IC	INTERCOM
ICM	INTERCOM MASTER STATION
ICS	INTERCOM SLAVE STATION
IDF	TELECOMMUNICATIONS INTERMEDIATE DISTRIBUTION FRAME
IDP	INTRUSION DETECTION SYSTEM PANEL
IG	ISOLATED GROUND
IMC	INTERMEDIATE METAL CONDUIT
ISP	INSIDE PLANT
JB	JUNCTION BOX
JE	JUNCTION ENCLOSURE
KS	KEY SWITCH
LAN	LOCAL AREA NETWORK
LB	ELBOW
LCP	LIGHTING CONTROL PANEL
LFMC	LIQUID FLEXIBLE METAL CONDUIT
LOC	LOCATION
LTG	LIGHTING
LV	LOW VOLTAGE
M	MICROWAVE
MC	METAL CLAD CABLE
MCC	MOTOR CONTROL CENTER
MDF	TELECOMMUNICATIONS MAIN DISTRIBUTION FACILITY
MIC	MICROPHONE
MM	MULTI-MODE
MMOF	MULTIMODE OPTICAL FIBER
MMS	MANUAL MOTOR STARTER
MTD	MOUNTED
MTR	MOTOR
NC	NORMALLY-CLOSED
NL	NIGHT LIGHT
NO	NORMALLY-OPEN
OAN	OR AS NOTED
OFCI	OWNER-FURNISHED, CONTRACTOR-INSTALLED

ELECTRICAL ABBREVIATIONS

OH	OVERHEAD
OHC	OVERHEAD COMMUNICATIONS
OSP	OUTSIDE PLANT
PA	PUBLIC ADDRESS
PB	PUSHBUTTON
PC	PHOTOCELL
PLWD	PLYWOOD
PMP	PUMP
PNL	PANELBOARD
PROJ	PROJECTOR
PT	POTENTIAL TRANSFORMER
PVC	RIGID NONMETALLIC CONDUIT
PWR	POWER
RCRP	RECEPTACLE CONTROL RELAY PANEL
REC	RECEPTACLE CONTROL RELAY PANEL
REF	REFRIGERATOR
RIO	ROUGH-IN ONLY
RMC	RIGID METAL CONDUIT
RNC	RIGID NON-METALLIC CONDUIT
SC	SHORT CIRCUIT
SCBD	SCOREBOARD
SEC	SECURITY
SECT	SECTION
SIM	SIMILAR
SM	SINGLE-MODE
SMOF	SINGLE-MODE OPTICAL FIBER
SMR	SURFACE METAL RACEWAY
SPD	SURGE PROTECTION DEVICE
SURF	SURFACE
SV	SOLENOID VALVE
SW	SWITCH
SWBD	SWITCHBOARD
SWGR	SWITCHGEAR
SYS	SYSTEMS
TC	TIME CLOCK
TEL	TELEPHONE
TELCOM	TELECOMMUNICATIONS
TGB	TELECOMMUNICATIONS GROUND BUS
TMGB	TELECOMMUNICATIONS MAIN GROUNDING BUS BAR
TP	TRAP PRIMER
TR	TELECOMMUNICATIONS ROOM
TYP	TYPICAL
UC	UNDER CABINET
UF	UNDER FLOOR
UG	UNDERGROUND
UGPP	UNDERGROUND PRIMARY POWER
UGSP	UNDERGROUND SECONDARY POWER
UGT	UNDERGROUND TELECOMMUNICATIONS
UON	UNLESS OTHERWISE NOTED
UPS	UNINTERUPTABLE POWER SUPPLY
UTP	UNSHIELDED TWISTED PAIR CABLE
VER	VERIFY
WAN	WIDE AREA NETWORK
WAP	WIRELESS ACCESS POINT
WAPA	WIRELESS ACCESS POINT EXTERIOR ANTENNA
WG	WIRE GUARD
WP	WEATHERPROOF
WPL	WEATHERPROOF LOCKING
WPU	WEATHERPROOF WHILE IN USE
XC	CROSS CONNECT
XFMR	TRANSFORMER
XFR	TRANSFER
XP	EXPLOSIONPROOF

ELECTRICAL SYMBOLS

GENERAL

NOTES:
1. INDICATED MOUNTING HEIGHTS ARE TO THE CENTER LINE OF BOX UNLESS NOTED OTHERWISE.
2. SEE PLANS FOR NON-STANDARD MOUNTING HEIGHTS.
3. POWER DEVICES SHOWN ON SYSTEM SHEETS E4 SERIES SHALL BE FOR COORDINATION ONLY. NOT ALL DEVICES ARE SHOWN FOR CLARITY.

3 — CODED NOTE REFERENCE

101 — ROOM NUMBER

FC-1 — MECHANICAL/SPECIAL EQUIPMENT DESIGNATION

LOW VOLTAGE ENCLOSURE

LUMINAIRES

15b A01 — LUMINAIRE
- LUMINAIRE TYPE
- CIRCUIT & SWITCH LEG OR CONTROL ('a' DENOTES CENTER LAMPS WHERE APPLICABLE)

SHADING DENOTES LUMINAIRE [CONNECTED TO EMERGENCY POWER SYSTEM] [EQUIPPED WITH EMERGENCY BALLAST]

STRIP LUMINAIRE

S02 — LUMINAIRE TYPE; CCT NO; CONTROL CCT; EXTERIOR POLE MOUNTED LUMINAIRE; BASE TYPE; DISTRIBUTION TYPE

SWITCHING DEVICES

SUBSCRIPTS DENOTE:

A	ABOVE COUNTER, CENTER 4" ABOVE TOP OF COUNTER OR BACKSPLASH
SD	2-BUTTON FOR STEP DIMMING CONTROL
"abcd"	EACH LOWER CASE LETTER DENOTES (1) SWITCH & ORDER OF SW'S

WALL SWITCH OCCUPANCY SENSOR +46"

WALL SWITCH +46"

OS — OCCUPANCY/VACANCY SENSOR
- "S" DENOTES STANDALONE (DIRECT WIRE) DEVICE
- "M" DENOTES LCM SYSTEM DEVICE
- "P" DENOTES LCP SYSTEM DEVICE

LIGHTING CONTROL DESIGNATION
- LIGHTING CONTROL PANEL
- CONTROL RELAY(S)
- BRANCH CIRCUIT NUMBER

LCP1 N1 HNA1

RECEPTACLE & POWER CONNECTIONS

SUBSCRIPTS DENOTE:

"A"	ABOVE COUNTER, CENTER 4" ABOVE TOP OF COUNTER OR BACKSPLASH
"C"	RECEPTACLE FOR COPIER +18"
"CLG"	RECEPTACLE INSTALLED IN CEILING
"CPS"	CAMERA POWER SUPPLY CONNECTION
"D"	RECEPTACLE FOR DRYER +30"
"DW"	DISHWASHER CONNECTION BELOW COUNTER +18"
"F"	RECEPTACLE FOR FREEZER +46"
"FH"	FUME HOOD CONNECTION
"IH"	INSTAHOT CONNECTION
"H"	MOUNT HORIZONTAL
"HA"	MOUNT HORIZONTALABOVE COUNTER, CENTER 4" ABOVE TOP OF COUNTER OR BACKSPLASH
"HD"	HAND DRYER - HEIGHT PER INTERIOR ELEVATION
"ICE"	ICE MACHINE +18
"M"	RECEPTACLE FOR MICROWAVE - HEIGHT PER INTERIOR ELEVATION
"R"	RECEPTACLE FOR REFRIGERATOR +46"
"RG"	RECEPTACLE FOR RANGE +30"
"RH"	RANGE HOOD - HEIGHT PER INTERIOR ELEVATION
"RO"	RANGE/OVEN +30"
"TK"	MOUNT HORIZONTALLY IN TOE KICK
"UC"	UNDER-COUNTER REFRIGERATOR +18"
"V"	RECEPTACLE FOR VENDING MACHINE +46"
"VP"	RECEPTACLE FOR VIDEO PROJECTOR MOUNTED 4 11/16" ABOVE PROJECTOR AV/DATA
"W"	RECEPTACLE FOR WASHING MACHINE +30"
"WC"	WATER COOLER - CONCEALED BEHIND UNIT SKIRT
"WP"	WEATHER-PROOF DEVICE
"WPU"	WEATHER-PROOF DEVICE WHILE-IN-USE

DUPLEX RECEPTACLE +18"

DOUBLE DUPLEX RECEPTACLE +18"

GROUND FAULT CIRCUIT INTERRUPTING RECEPTACLE +18"

SPECIAL PURPOSE EQUIPMENT CONNECTION PROVIDE FUSIBLE DISCONNECT WHERE REQUIRED

XX-1 — MOTOR CONNECTION

DISCONNECT SWITCH

MOTOR STARTER OR VFD AS INDICATED

COMBINATION STARTER OR VFD AS INDICATED

NAME — PANELBOARD

IR — INTERFACE RELAY W/10AMP MIN. CONTACTS

RACEWAY & WIRING

FLUSH COUPLING

J — OUTLET/JUNCTION BOX

CONCEALED RACEWAY

CROSSHATCH DENOTES WIRES BESIDES EQUIPMENT GROUND CONDUCTOR. NO CROSSHATCH DENOTES 2 # 12 WIRES PLUS #12 EQUIPMENT GROUND CONDUCTOR. DOT DENOTES AN ADDITIONAL #12 ISOLATED GROUND CONDUCTOR.

CONDUIT STUB

POWER DISTRIBUTION

C20 — FEEDER DESIGNATION

CIRCUIT BREAKER

GFP — CIRCUIT BREAKER W/GROUND-FAULT PROTECTION

FUSE

SWITCH

FUSIBLE SWITCH

GROUNDING ELECTRODE

NORMALLY OPEN CONTACTOR/RELAY

NORMALLY CLOSED CONTACTOR/RELAY

MAGNETIC MOTOR STARTER

MANUAL MOTOR STARTER W/OVERLOAD HEATERS

LIGHTNING ARRESTOR

DM — DEMAND METER

UM — USER METER

METERING TRANSFORMERS

TRANSFORMER

M — METER

F — FAULT INDICATOR

ISC — SYMMETRICAL SHORT CIRCUIT VALUE

DEMOLITION SUBSCRIPTS

E	DENOTES EXISTING TO REMAIN IN SERVICE
R	DENOTES EXISTING TO BE REMOVED
ER	DENOTES EXISTING TO BE RELOCATED
RE	DENOTES RELOCATED ITEM IN NEW LOCATION
RR	DENOTES REMOVE AND REINSTALL IN ORIGINAL LOCATION
EA	DENOTES EXISTING TO BE ABANDONED IN PLACE REMOVE DEVICE & WIRING AND PROVIDE BLANK PLATE
RN	DENOTES EXISTING TO BE REPLACED WITH NEW AT ORIGINAL LOCATION

- SHEET LIST -

NUMBER	SHEET NAME
E001	SYMBOLS LIST & ABBREVIATIONS
E002	WSEC COMPLIANCE FORMS
E003	WSEC COMPLIANCE FORMS
E004	WSEC COMPLIANCE FORMS
E101	ELECTRICAL SITE PLAN
E201	ENLARGED BUILDING PLANS
E301	ONE-LINE DIAGRAM AND SCHEDULES
ED100	DETAILS

PARTNERSHIP berger
1927 Post Alley, Ste. 2
Seattle, WA 98101
206 325 6977
bergerpartnership.com

NAC ENGINEERING
nacarchitecture.com
2025 FIRST AVE | SUITE 300
SEATTLE WA 98121
P:206.441.4522

Totem Lake Park Phase 1
City of Kirkland
12031 Totem Lake Way, Kirkland, WA 98034

MARK ADRIAN MCMICKEN
STATE OF WASHINGTON
34258
REGISTERED PROFESSIONAL ENGINEER

SET TYPE:
Bid Set

SET ISSUE DATE:
09/13/2019

REVISIONS:

Δ	DESCRIPTION	DATE

DRAWN/CHECKED:
LAI / MAM

SHEET NAME:
SYMBOLS LIST & ABBREVIATIONS

SHEET NUMBER:
E001

Plotted: 9/5/2019 8:40:04 AM
Filename: D:_Revit\Totem Lake Park-PH1_ELEC_Liverson.rvt
Berger Partnership Project Number:

Exterior Lighting — LTG-EXT

2015 Washington State Energy Code Compliance Forms for Commercial Buildings including R2, R3, R4 over 3 stories and all R1 — Revised Nov 2017

Project Title: Totem Lake Park Phase 1	Date 09/05/2019	
Exterior Lighting Zone	Zone 1 ◆ Zone 2 Zone 3 Zone 4 *Exterior Lighting Zone selection required to enable LTG-EXT form. Zones are defined in Table C405.5.2(1) and specified by the jurisdiction.*	For Building Department Use
Calculation Area	New construction; Addition - stand alone; Addition + existing; Alteration with < 50% ext. wattage replaced; Alteration with ≥ 50% ext. wattage replaced	User Note
Building Grounds *Applies to individual luminaires > 100 Watts*	☐ Efficacy > 80 lumens/watt ☐ Exemption ☐ Controlled by motion sensor	

Tradable Maximum Allowed Lighting Wattage — NOTE 1

Base Site Allowance: 600

Tradable Surfaces	Surface Description	Area (ft^2), perimeter (lf) or # of items	Allowed Watts per ft^2 or per lf	Allowed Watts x ft^2 (or x lf) NOTE 2
Grounds Walkways <10 wide		3600	0.7 W/LF	2520
Grounds Walkways >10' wide		389	0.14 W/ft2	54

Total Allowed Tradable + Site Allowance Watts: 3175

Tradable Proposed Lighting Wattage — NOTE 3

Tradable Surface	Fixture Description NOTE 4, 5	Number of Fixtures	Watts per Fixture NOTE 6	Watts Proposed
Grounds Walkways >10' wide	Z02	16	11	173
Grounds Walkways <10 wide	Z01	6	53	318

Total proposed tradable watts may not exceed the sum of total allowed tradable watts plus the base site allowance. Any base site allowance not needed to make tradable watts comply can be applied to individual non-tradable categories.

Total Proposed Tradable Watts: 498

Non-Tradable Maximum Allowed Lighting Wattage — NOTE 1

Site Allowance Remaining: 600

Non-Tradable Surfaces	Surface Description	Area (ft^2), perimeter (lf) or # of items	Allowed Watts per ft^2, lf or item	Allowed Watts x ft^2 (or x lf) NOTE 2

Non-Tradable Proposed Lighting Wattage — NOTE 3, 7

Non-Tradable Surface	Fixture Description NOTE 4, 5	Number of Fixtures	Watts per Fixture NOTE 6	Watts Proposed

Non-tradable proposed watts may not exceed allowed watts for any individual surface unless the total excess watts for all non-tradable surfaces are less than the remaining site allowance.

Non-Tradable Watts Exceeding LPA: 0

Remaining Site Allowance: 600

Exterior Lighting — COMPLIES WITH MAX. ALLOWANCE

Note 1 *- List all exterior surfaces per Table C405.5.2(2) that occur in the project scope. Select exterior surface categories from drop down menu.*
Note 2 *- **Unlit Message** - Enter lighting fixture information for this surface in Proposed Lighting Wattage table to generate Lighting Power Allowance.*
Note 3 *- List all proposed lighting fixtures including existing-to-remain fixtures.*
Note 4 *- For proposed Fixture Description, indicate fixture type, lamp type, number of lamps in the fixture, and ballast type (if applicable).*
Note 5 *- Existing-to-remain fixtures shall be included in the Tradable and Non-Tradable Proposed Lighting Wattage tables in the same manner as new fixtures. Identify as existing in fixture description.*
Note 6 *- For proposed Watts/Fixture enter the luminaire wattage for installed lamp and ballast using manufacturer or other approved source. For luminaires with screw-in lamps, enter the manufacturer's listed maximum input wattage of the fixture (not the lamp wattage). For low voltage lighting, enter the wattage of the transformer.*
Note 7 *- Automated Teller and Night Depositories - For each location, enter the number of ATM machines or depositories within that location. If there are multiple locations in the project, enter each location individually in the Non-Tradable Maximum Allowed Lighting Wattage table and identify the location in the Surface Description section.*

Interior Lighting - Space-By-Space Method — LTG-INT-SPACE

2015 Washington State Energy Code Compliance Forms for Commercial Buildings including R2, R3, R4 over 3 stories and all R1 — Revised Nov 2017

Project Title: Totem Lake Park Phase 1	Date 09/05/2019	
Calculation Area NOTE 9	New Construction; Addition - stand alone; Addition + existing; Spaces where < 50% of luminaires are replaced; Spaces where ≥ 50% of luminaires are replaced; Spaces where the Use is changing (C505)	For Building Department Use
LPA Calculation Type	Standard; Additional Efficiency Package Option C406.3 Reduced Interior Lighting Power *To comply with C406.3, the Proposed LPD shall be 25% lower than the Target LPA. Refer to C406.3 for additional requirements.*	User Note

Maximum Allowed Lighting Wattage — NOTE 1

Location (plan #, room #)	Space Type	Ceiling Heights NOTE 2	Gross Interior Area in ft^2	Allowed Watts per ft^2	Watts Allowed (watts/ft^2 x area)
	Restroom: all other		64	0.780	50
	Restroom: all other		75	0.780	58
	Restroom: all other		78	0.780	61
	Electrical/mechanical		64	0.760	48

Total Area 280

Retail Display Allowance from LTG-INT-DISPLAY

Lobby Art/Exhibit Display Allowance from LTG-INT-DISPLAY NOTE 8

Allowed Watts 217

Proposed Lighting Wattage — NOTE 3

Location (plan #, room #)	Fixture Description NOTE 4, 5, 6	Number of Fixtures	Watts/ Fixture NOTE 7	Watts Proposed
SEE PLANS	S02 - SURFACE MOUNTED VALDAL RESISTANT VANITY	3	25	75
SEE PLANS	S03 - WALL MOUNTED INDUSTRIAL STRIP	2	19	38
SEE PLANS	S01A - WET LOCATION, SURFACE MOUNTED	7	14	98

Proposed Retail Display Lighting from LTG-INT-DISPLAY

Total Proposed Watts may not exceed Total Allowed Watts for Interior Lighting — Total Proposed Watts 211

Interior Lighting Power Allowance — COMPLIES

Note 1 - List all unique space types per Table C405.4.2(2) that occur in the project scope. Select space type category from drop down menu.
Note 2 - Indicate ceiling height for atriums and spaces utilizing the ceiling height adjustment per Table C405.4.2(2). Footnotes d thru f.
Note 3 - List all proposed lighting fixtures including exempt lighting equipment and existing-to-remain fixtures.
Note 4 - For proposed Fixture Description, indicate fixture type, lamp type (e.g. T-8), number of lamps in the fixture, and ballast type (if included). For track lighting, list the length of the track (in feet) in addition to the fixture, lamp, and ballast information.
Note 5 - For lighting equipment eligible for exemption per C405.4.1, note exception number and leave Watts/Fixture blank.
Note 6 - Existing-to-remain fixtures shall be included in the Proposed Lighting Wattage table in the same manner as new fixtures. Identify as existing in fixture description.
Note 7 - For proposed Watts/Fixture enter the luminaire wattage for installed lamp and ballast using manufacturer or other approved source. For luminaires with screw-in lamps, enter the manufacturer's listed maximum input wattage of the fixture (not the lamp wattage). For low voltage lighting, enter the wattage of the transformer. For line voltage track/busway systems, enter the larger of the attached luminaire wattage or 50 watts/lineal foot, or enter the wattage limit of permanent current limiting device.
Note 8 - Lobby Art/Exhibit Display Allowance is independent of the Maximum Allowed Lighting Wattage. Enter all proposed lobby art/exhibit display fixtures in LTG-INT-DISPLAY form only.
Note 9 - Calculation Area Details:
a. Lighting fixtures in a building addition may comply as a stand alone project, or they may be combined with the overall existing building lighting systems to demonstrate compliance. Refer to C502.1.
b. For alterations and building additions, provide Space Types and gross interior areas in the Maximum Allowed Lighting Wattage table. If a building addition will comply as combined with the overall existing building lighting systems, include all applicable existing Space Types and gross interior areas.
c. If less than 50% of existing lighting fixtures will be replaced, provide total existing lighting wattage (prior to alteration) in the space provided in the Maximum Allowed Lighting Wattage table.
d. If lighting alteration project includes some building areas or spaces where < 50% of luminaires are replaced, and other areas or spaces where ≥ 50% of luminaires are replaced, then these areas or spaces may be documented separately. If multiple forms will be completed to demonstrate compliance for the total scope of the alteration project, describe scope covered in form in User Note section.

Lighting Summary — LTG-SUM

2015 Washington State Energy Code Compliance Forms for Commercial Buildings including R2, R3, R4 over 3 stories and all R1 — Revised Nov 2017

Project Info *Compliance forms do not require a password to use.*	**Project Title:** Totem Lake Park Phase 1 *Applicant Information. Provide contact information for individual who can respond to inquiries about compliance form information provided.* Company Name: City of Kirkland Company Address: 12031 Totem Lake Way, Kirkland, WA 98034 Applicant Name: Lars Iverson Applicant Phone: 206-441-4522 Applicant Email: liverson@nacarchitecture.com	Date 09/05/2019 For Building Department Use
Project Description	☑ New Building ☐ Addition ☐ Alteration ☐ No Lighting Scope *Include PROJ-SUM form (included in envelope forms workbook) with lighting compliance forms.*	
Interior Lighting System Description *Briefly describe interior lighting system type and features.* ☑ Interior Lighting Plans Included	restrooms controled via occupancy sensors and a mech/elec room controlled via occupancy sensor wall switch	
Interior Lighting Power Allowance Method	☐ Building Area Method ☑ Space-by-space Method *Select method used in project.*	
Interior Lighting Controls *Select method of compliance for lighting controls.*	☐ All C405.2.1 - C405.2.8 Lighting Controls ☐ C405.2 Exception 5 Luminaire Level Lighting Controls (LLLC) ☐ Additional Efficiency Package Option C406.4 Enhanced Digital Lighting Controls *To comply with C406.4, no less than 90% of the total installed interior lighting power shall comply with the required controls per C406.4.*	
Dwelling Unit Interior Lighting	*Permanently installed interior lighting fixtures in dwelling units comply with:* C405.2 thru C405.5 Commercial Lighting Controls and LPA; C406.3 High Efficacy Lighting; R404.1 Residential High Efficacy Lighting.	No Dwelling Units *Dwelling unit lighting complies with WSEC Residential provisions in lieu of WSEC Commercial provisions.*
Exterior Lighting System Description *Briefly describe exterior lighting system type and features.* ☑ Exterior Lighting Plans Included	Fixtures under the soffit and sidewalks	

Building Additions — *Refer to Section C502.2.6 for additional requirements.*

Compliance Method	Interior lighting	Exterior lighting
Lighting systems in addition area comply with all applicable provisions as a stand alone new construction project	☑	☑
Lighting systems in addition are combined with existing building lighting systems to demonstrate compliance	☐	☐

Addition is combined with existing:
*For **interior** lighting projects, include new + existing-to-remain interior lighting fixture wattage in Proposed Lighting Wattage table in LTG-INT-BLD or LTG-INT-SPACE form.*
*For **exterior** lighting projects, include new + existing-to-remain exterior lighting fixture wattage in Proposed Tradable and Proposed Non-Tradable Lighting Wattage tables in LTG-EXT form.*

Lighting Summary, cont. — LTG-SUM

2015 Washington State Energy Code Compliance Forms for Commercial Buildings including R2, R3, R4 over 3 stories and all R1 — Revised Nov 2017

Project Title: Totem Lake Park Phase 1		Date 11/8/2018
Change of Space Use	☐ Existing interior lighting systems in areas under-going a change in space use are upgraded to comply with LPAs for the new space types per Tables C405.4.2(1) or C405.4.2(2). *Identify interior spaces requiring LPD upgrade to the current Code in Proposed Lighting Wattage table in LTG-INT-BLD or LTG-INT-SPACE form.*	

Interior and Exterior Lighting Alterations

Select all Lighting Power and Lighting Control elements that apply to the scope of the retrofit project. If project includes a combination of spaces where less than 50% of the existing fixtures are replaced in some spaces, and 50% or more of the fixtures are replaced in others, then provide separate lighting power compliance forms for the two retrofit conditions. Spaces undergoing the same type of retrofit may be combined into one lighting power compliance form.
Refer to Section C503.6 for additional requirements.
All alteration lighting controls shall be commissioned per C408.3.

Lighting Power	Interior lighting	Parking garage	Exterior lighting
50% or more of existing are replaced	☐	☐	☐
Less than 50% of existing are replaced	☐	☐	☐
Lamp and/or ballast replacement only -- existing total wattage not increased	☐	☐	☐

50% or more replaced *- Total lighting power of new + existing-to-remain fixtures shall comply with total LPA per Sections C405.4.2 and C405.5.2. Include new + existing-to-remain fixtures in Proposed Lighting Wattage table in LTG-INT-BLD, LTG-INT-SPACE or LTG-EXT form.*
Less than 50% replaced *- Total lighting power of new + existing-to-remain fixtures shall not exceed the total lighting power prior to alteration. Include new + existing-to-remain fixtures in the Proposed Lighting Wattage table in LTG-INT-BLD, LTG-INT-SPACE or LTG-EXT form.*
50% threshold *applies to number of luminaires for interior spaces and parking garages, and total installed wattage for exterior luminaires.*

Lighting Controls	Interior lighting	Parking garage	Exterior lighting
New wiring installed to serve added fixtures and/or fixtures relocated to new circuit(s)	☐	☐	☐
New or moved lighting panel	☐	☐	☐
Interior space is reconfigured - luminaires unchanged or relocated only	☐		

New wiring or circuit *- For interior lighting, provide required manual controls per C405.2.3, occupancy sensor controls per C405.2.1, daylight responsive controls per C405.2.4 and application specific lighting controls per C405.2.5. For exterior lighting, provide required controls per C405.2.7.*
New or moved panel *- Provide all applicable lighting controls as noted for New Wiring and automatic time switch controls per C405.2.2.*
Reconfigured interior space *- Provide all required lighting controls that apply to a new interior space. Application specific lighting control provisions per C405.2.5 do not apply to reconfigured spaces.*

☐ ***No changes are being made to the interior or exterior lighting systems and existing space uses and configuration are not changed.***

PARTNERSHIP berger
1927 Post Alley, Ste. 2
Seattle, WA 98101
206.325.6877
bergerpartnership.com

NAC ENGINEERING
nacarchitecture.com
2025 FIRST AVE | SUITE 300
SEATTLE WA 98121
P:206.441.4522

Totem Lake Park Phase 1
City of Kirkland
12031 Totem Lake Way, Kirkland, WA 98034

SET TYPE: **Bid Set**

SET ISSUE DATE: **09/13/2019**

REVISIONS:

Δ	DESCRIPTION	DATE

DRAWN/CHECKED: **LAI / MAM**

SHEET NAME: **WSEC COMPLIANCE FORMS**

SHEET NUMBER: **E002**

Lighting, Motor, and Electrical Permit Checklist, Pg. 2 — LTG-CHK

2015 Washington State Energy Code Compliance Forms for Commercial Buildings including R2, R3, R4 over 3 stories and all R1 — Revised Nov 2017

Project Title: Totem Lake Park Phase 1 — Date 09/05/2019

The following information is necessary to check a permit application for compliance with the lighting, motor, and electrical requirements in the Washington State Energy Code, Commercial Provisions.

Applicability (yes,no,na)	Code Section	Component	Compliance information required in permit documents	Location in Documents	Building Department Notes
NA	C405.2.5 - Item 3	Hotel/motel guest rooms	Indicate method of automatic control - vacancy or captive key control of all installed luminaires and switched receptacles in guest room		
NA	C405.2.5 - Item 4	Supplemental task lighting	Indicate method and location of automatic shut-off vacancy control for supplemental task lighting, including under-shelf or under-cabinet lighting		
NA	C405.2.5 - Item 5	Lighting for non-visual applications	Indicate on plans eligible non-visual lighting applications, include sq. ft. area of each lighting control zone;		
			Indicate on plans that non-visual lighting are controlled independently from both general area lighting and other lighting applications within the same space;		
			Indicate method of manual lighting control and applicable automatic lighting control		
NA	C405.2.5 - Item 6	Lighting equipment for sale or demonstration	Indicate on plans that lighting equipment for sale or demonstration are controlled independently from both general area lighting and other lighting applications within the same space;		
			Indicate method of manual lighting control and applicable automatic lighting control		
NA	C405.2.5 - Item 7	Means of egress lighting	Identify on plans egress fixtures that function as both normal and emergency means of egress illumination;		
			Provide calculation of lighting power density of total egress lighting;		
			If total egress lighting power density is greater than 0.02 W/sq. ft., indicate on plans egress fixtures requiring automatic shut-off during unoccupied periods;		
			Indicate method of automatic shut-off control		
Yes	C405.2.7	Exterior lighting controls	Indicate on exterior lighting plans and fixture schedules the automatic lighting control method, control sequence, and locations served;		
			For building facade and landscape lighting, indicate automatic controls shut off lighting as a function of dawn/dusk and fixed opening/closing time;		
			For all other exterior lighting, indicate automatic controls shut off lighting as a function of available daylight; include control sequence that also reduces lighting power by at least 30% between 12am-6am, or from 1 hour after closing to 1 hour before opening, or based upon motion sensor		
Yes	C405.5.1	Exterior building grounds lighting controls	For building grounds fixtures greater than 100 watts, indicate on plans whether fixtures have efficacy greater than 80 lumens or; are controlled by motion sensor, or are exempt lighting per C405.5.2		
NA	C405.2.5 (listed after C405.2.7)	Area controls - Master control switches and circuit power limit	Indicate location(s) of master control switch(es) intended to control multiple independent switches; circuit breaker may not be used as a master control switch;		
			Verify that no 20 amp circuit controlled by a single switch or automatic control is loaded beyond 80%		
ADDITIONAL EFFICIENCY PACKAGE OPTION - ENHANCED DIGITAL LIGHTING CONTROLS					
NA	C406.4	Enhanced digital lighting controls	To comply with additional efficiency package option, indicate on plans all interior lighting fixtures that are individually addressed and provided with continuous dimming, or exception taken;		
			Include calculation of percent total installed interior lighting power that is configured with required enhanced lighting control functions (min 90% to comply with additional efficiency package option)		

The following information is necessary to check a permit application for compliance with the lighting, motor, and electrical requirements in the Washington State Energy Code, Commercial Provisions.

Lighting, Motor, and Electrical Permit Checklist, Pg. 1 — LTG-CHK

2015 Washington State Energy Code Compliance Forms for Commercial Buildings including R2, R3, R4 over 3 stories and all R1 — Revised Nov 2017

Project Title: Totem Lake Park Phase 1 — Date 09/05/2019

The following information is necessary to check a permit application for compliance with the lighting, motor, and electrical requirements in the Washington State Energy Code, Commercial Provisions.

Applicability (yes,no,na)	Code Section	Component	Compliance information required in permit documents	Location in Documents	Building Department Notes
LIGHTING CONTROLS					
Yes	C405.2	Lighting controls, general	For all lighting fixtures, indicate lighting control method on plans for spaces and lighting zone(s) served, or exception taken		
NA	C405.2	Luminaire level lighting controls (LLLC)	Indicate on plans all fixtures provided with LLLC in lieu of C405.2 lighting controls; provide description of control capabilities and performance parameters		
NA	C405.1	Lighting in dwelling units	For permanently installed lighting fixtures in dwelling units, indicate lighting control method on plans for spaces and lighting zone(s) served, or demonstrate compliance with high efficacy exception		
Yes	C405.2.3 C405.2.1.1 C405.2.2.2 C405.2.4 C405.2.5	Manual controls	Indicate on plans the method of manual lighting control (whether combined with occupancy sensor, automatic light reduction, daylight responsive or specific application controls), location of manual control device and area or specific application it serves		
NA	C405.2.2.1 C405.2.2.2 C405.2.3	Manual interior light reduction controls	Indicate on plans which method of manual 50% lighting load reduction is provided, or whether lighting load is reduced via occupancy sensors or daylight responsive controls		
Yes	C405.2.2	Method of automatic shut-off control	Indicate on plans the method of automatic shut-off control during unoccupied periods (occupancy sensor, time switch or digital timer switch) for all lighting zones;		
			Indicate locations where automatic shutoff is provided by other methods (occupancy sensor or digital timer switch) or which time switch control exception applies		
Yes	C405.2.1 C405.2.1.1	Occupancy sensor controls	Indicate on plans the spaces served by occupancy sensors;		
			Indicate whether occupancy sensor controls are configured to be manual-on, automatic 50%-on, or serve a space eligible for automatic 100%-on per exception		
NA	C405.2.1.2	Occupancy sensor controls - warehouses	Indicate aisleways and open areas in warehouse spaces provided with occupancy sensor controls that reduce lighting power by 50%		
NA	C405.2.2.1	Automatic time switch controls	Indicate locations of override switches on plans and the lighting zone(s) served, include area sq. ft.		
	C405.2.6	Digital timer switch	Indicate digital timer switch control includes: manual on/off, time delay, audible and visual indication of impending time-out		
NA	C405.2.4.2 C405.2.4.3	Daylight zones - Sidelight and toplight	Indicate primary and secondary sidelight daylight zone areas on plans, include sq. ft.;		
			Indicate toplight daylight zone areas on plans, include sq. ft.;		
			For small vertical fenestration assemblies (rough opening less than 10 percent of primary daylight zone) where daylight responsive controls are not required, provide fenestration area to daylight zone calculation(s)		
NA	C405.2.4	Daylight responsive controls	Indicate on plans lighting zone(s) served by daylight responsive controls;		
			Identify sidelight and toplight daylight zones that are not provided with daylight sensing controls and the exception(s) that apply;		
			Indicate on plans the lighting load reduction method - continuous dimming, or stepped dimming that provides at least two even steps between 0%-100% of rated power;		
			Indicate that daylight sensing controls are configured to completely shut off all controlled lights in the lighting zone		
NA	C405.2.5	Additional controls - Specific application lighting controls	Identify spaces and lighting fixtures on plans that require specific application lighting controls per this section		
NA	C405.2.5 - Items 1&2	Display and accent lighting	Indicate on plans that display and accent lighting, and display case lighting are controlled independently from both general area lighting and other lighting applications within the same space;		
			Indicate manual and automatic lighting control method		

berger PARTNERSHIP
1927 Post Alley, Ste. 2
Seattle, WA 98101
206.325.6977
bergerpartnership.com

NAC ENGINEERING
nacarchitecture.com
2025 FIRST AVE | SUITE 300
SEATTLE WA 98121
P:206.441.4522

Totem Lake Park Phase 1
City of Kirkland
12031 Totem Lake Way, Kirkland, WA 98034

MARK ADRIAN MCMICKEN — STATE OF WASHINGTON — 34258 — REGISTERED PROFESSIONAL ENGINEER

SET TYPE: **Bid Set**

SET ISSUE DATE: **09/13/2019**

REVISIONS:

Δ	DESCRIPTION	DATE

DRAWN/CHECKED: **LAI / MAM**

SHEET NAME: **WSEC COMPLIANCE FORMS**

SHEET NUMBER: **E003**

Berger Partnership Project Number:
Plotted: 9/5/2019 8:40:05 AM
Filename: D:_Revit\Totem Lake Park-PH1_ELEC_Liverson.rvt

Lighting, Motor, and Electrical Permit Checklist, Pg. 5 — LTG-CHK

2015 Washington State Energy Code Compliance Forms for Commercial Buildings including R2, R3, R4 over 3 stories and all R1 — Revised Nov 2017

Totem Lake Park Phase 1 — Date **09/05/2019**

The following information is necessary to check a permit application for compliance with the lighting, motor, and electrical requirements in the Washington State Energy Code, Commercial Provisions.

Applicability (yes,no,na)	Code Section	Component	Compliance information required in permit documents	Location in Documents	Building Department Notes
MOTORS, TRANSFORMERS, ELECTRIC METERS, INTERIOR TRANSPORTATION					
NA	C405.6	Electrical transformers	Include electrical transformer schedule on electrical plans; indicate transformer size, efficiency, or exception taken		
NA	C405.7	Dwelling unit electrical energy consumption	Indicate on electrical plans that each dwelling unit in Group R-2 has a separate electrical energy meter		
Yes	C405.8	Electric motor efficiency	Include all motors, including fractional hp motors, in electric motor schedule on electrical plans; indicate hp, rpm, rated efficiency, or exception applied		
NA	C405.9.1	Elevator cabs	For luminaires in each elevator cab, provide calculated average efficacy of combined fixtures that indicates efficacy is not less than 35 lumens per watt;		
			Indicate rated watts per cfm for elevator cab ventilation fans do not exceed 0.33 watts per cfm;		
			Indicate automatic controls that de-energize lighting and ventilation fans when elevator is stopped and unoccupied for a period of 15 minutes or more		
NA	C405.9.2	Escalators and moving walks	Indicate escalators comply with ASME A17.1/CSA B44; automatic controls are configured to reduce operational speed to the minimum permitted when not in use		
NA	C405.9.3	Regenerative drive	Indicate all one-way down or reversible escalators are provided with a variable frequency regenerative drive		
DOCUMENTATION AND SYSTEM REQUIREMENTS TO SUPPORT COMMISSIONING (Cx)					
NA	C408.3	Scope of electrical power and lighting systems commissioning	Indicate that all electrical systems (receptacles, transformers, motors, vertical and horizontal transportation) for which the WSEC requires control functions and / or configuration to perform specific functions are required to be commissioned;		
			Where total building lighting load is > 20 kW, or where total lighting load of luminaires requiring daylight sensing and / or occupancy control > 10 kW, indicate that all automatic lighting control systems are required to be commissioned; or provide building lighting power calculation demonstrating eligibility for exception;		
NA	C405.13 C408.1.1 C408.1.2 C408.1.4.2 C103.6	Commissioning requirements in construction documents	Indicate Cx requirements in plans and specifications for all applicable electrical and lighting control systems per C408;		
			Include general summary with at minimum Items 1 thru 4 of the Cx plan per C408.1.2 including: narrative description of activities, responsibilities of the Cx team, schedule of activities including verification of project close out documentation per C103.6, and conflict of interest plan (if required);		
			Include in general summary that a Cx project report or Compliance Checklist (Figure C408.1.4.2) shall be completed by the Certified Cx Professional and provided to the owner prior to the final electrical inspection		
NA	C408.3.1	Functional performance testing criteria	Identify in plans and specifications the intended operation of all equipment and controls during all modes of operation, including interfacing between new and existing-to-remain systems		
PROJECT CLOSE OUT DOCUMENTATION					
Yes	C103.6.3	Project close out documentation requirements	Indicate in plans that project close out documentation is required including WSEC lighting compliance forms and calculations that document all interior and exterior lighting area and / or surface types, lighting power allowances and installed densities		

If "no" is selected for any question, provide explanation:

End of Lighting, Motor & Transformer Permit Documents Checklist

Lighting, Motor, and Electrical Permit Checklist, Pg. 4 — LTG-CHK

2015 Washington State Energy Code Compliance Forms for Commercial Buildings including R2, R3, R4 over 3 stories and all R1 — Revised Nov 2017

Totem Lake Park Phase 1 — Date **09/05/2019**

The following information is necessary to check a permit application for compliance with the lighting, motor, and electrical requirements in the Washington State Energy Code, Commercial Provisions.

Applicability (yes,no,na)	Code Section	Component	Compliance information required in permit documents	Location in Documents	Building Department Notes
LIGHTING ALTERATIONS					
NA	C503.6	Interior and parking garage lighting fixture alterations	Where ≥ 50% of existing luminaires in interior space(s) or parking garage are replaced; indicate compliance path (building area or space-by-space method); include all new and existing-to-remain luminaires in compliance form (LTG-INT-BLD or LTG-INT-SPACE); indicate proposed lighting wattage does not exceed maximum allowed per compliance path		
			Where < 50% of existing luminaires in interior space(s) or parking garage are replaced; indicate total existing lighting wattage in each space prior to alteration; include all new and existing-to-remain luminaires in LTG-INT-SPACE form; indicate proposed total lighting wattage in alteration area does not exceed total existing lighting wattage prior to alteration		
	C503.6	Exterior lighting fixture alterations	Where ≥ 50% of existing exterior lighting wattage is replaced; include all new and existing-to-remain luminaires in LTG-EXT form; indicate proposed total exterior lighting wattage does not exceed maximum allowed		
			Where < 50% of existing exterior lighting wattage is replaced; indicate total existing lighting wattage prior to alteration; include all new and existing-to-remain luminaires in LTG-EXT form; indicate proposed total exterior lighting wattage does not exceed total existing wattage prior to alteration		
NA	C503.6	Interior lighting wiring alterations	Where new wiring is installed to serve new interior luminaires and /or luminaires are relocated to a new circuit; indicate lighting controls are provided (as applicable) - manual (C405.2.3); occupancy sensor (C405.2.1); daylight responsive (C405.2.4); specific application (C405.2.5); exit signs (C405.3)		
NA	C503.6	Exterior lighting wiring alterations	Where new wiring is installed to serve new exterior luminaires and /or luminaires are relocated to new circuit; indicate exterior lighting controls are provided (C405.2.7)		
NA	C503.6	Lighting panel alterations	Where a new lighting panel is installed or an existing panel is moved (all new raceway and conductor wiring); indicate lighting controls are provided (as applicable) - same provisions as wiring alterations; time switch controls and manual light reduction controls (C405.2.2)		
	C503.6	Interior space reconfiguration	Where interior space(s) is reconfigured (permanently installed walls or ceiling-height partitions); indicate lighting controls are provided (as applicable) - same provisions as lighting panel alterations		
	C504.2	Lighting repairs	Identify existing luminaires being upgraded with bulb and / or ballast replacement; indicate fixture alteration does not increase existing fixture wattage		
	C505.1	Change of space use	Identify spaces on plans where the building area type or space use type is being changed from one type to another per Tables C405.4.2(1) or (2)		
			Indicate compliance path (building area or space-by-space method); include all new and existing-to-remain luminaires in compliance form (LTG-INT-BLD or LTG-INT-SPACE); indicate proposed lighting wattage does not exceed maximum allowed per compliance path		
RECEPTACLES					
NA	C405.10	Controlled receptacles	Identify all controlled and uncontrolled receptacles on electrical plans in each space in which they are required; include receptacle configuration such as spacing between controlled and uncontrolled, duplex devices, etc;		
			Indicate on plans whether the method of automatic control for each controlled receptacle zone is by occupant sensor or programmable time-of-day control		

The following information is necessary to check a permit application for compliance with the lighting, motor, and electrical requirements in the Washington State Energy Code, Commercial Provisions.

Lighting, Motor, and Electrical Permit Checklist, Pg. 3 — LTG-CHK

2015 Washington State Energy Code Compliance Forms for Commercial Buildings including R2, R3, R4 over 3 stories and all R1 — Revised Nov 2017

Project Title: Totem Lake Park Phase 1 — Date **09/05/2019**

The following information is necessary to check a permit application for compliance with the lighting, motor, and electrical requirements in the Washington State Energy Code, Commercial Provisions.

Applicability (yes,no,na)	Code Section	Component	Compliance information required in permit documents	Location in Documents	Building Department Notes
INTERIOR LIGHTING POWER & EFFICACY					
Yes	C405.4.1 C405.4.2	Total connected interior lighting power	Include all luminaires in lighting fixture schedule; indicate fixture types, lamps, ballasts, and manufacturer's rated watts per fixture;		
			Identify spaces eligible for lighting power exemption on plans and in compliance forms; indicate the exception applied;		
			Identify lighting equipment eligible for lighting power exemption in fixture schedule and in compliance forms; indicate the exception applied;		
			Indicate that exempt lighting equipment is in addition to general area lighting and is controlled independently		
NA	C405.3	Exit signs	Indicate location of exit signs on plans and rated watts per fixture in lighting fixture schedule (maximum 5 watts per side)		
NA	C405.1	Lighting in dwelling units - lamp efficacy	If high efficacy exception is applied to permanently installed lighting fixtures in dwelling units, indicate in lighting fixture schedule if lamps in fixtures are high efficacy per R404.1. Calculate percentage of fixtures with high efficacy lamps in project (min 75% to comply with exception).		
Interior Lighting Power Calculation - Indicate compliance path taken					
NA	C405.4.2.1	Building Area Method	Complete required compliance forms – proposed wattage per building area does not exceed maximum allowed wattage per building area; identify locations of building areas on plans		
Yes	C405.4.2.2	Space-By-Space Method	Complete required compliance forms – total proposed wattage does not exceed maximum allowed wattage; identify locations of space types on plans, including retail display areas, lobby art & exhibit display areas, and ceiling heights as applicable		
ADDITIONAL EFFICIENCY PACKAGE OPTION - REDUCED INTERIOR LIGHTING POWER DENSITY					
NA	C406.3	Reduced lighting power density	To comply with additional efficiency package option, demonstrate in compliance forms that total connected interior lighting wattage is 25% less than the total maximum allowed lighting wattage via Building Area Method or Space-By-Space Method		
NA	C406.3	Reduced lighting power density - dwelling unit lamp efficacy	For project with dwelling units, to comply with additional efficiency package option indicate in lighting fixture schedule if lamps in interior fixtures have efficacy rating of 60 lumens per watt or more. Calculate percentage of fixtures with lamps that have this efficacy rating (min 95% to comply with option)		
EXTERIOR LIGHTING POWER & EFFICACY					
Yes	C405.5.2	Total connected exterior lighting power	Include all luminaires in lighting fixture schedule; indicate fixture types, lamps, ballasts, and manufacturer's rated watts per fixture;		
			Identify exterior applications eligible for lighting power exemption on plans and in compliance forms; indicate exception applied;		
			Indicate that exempt exterior lighting is controlled independently from non-exempt exterior lighting; include exception claimed for each fixture or group of fixtures under exception category		
Yes	Table C405.5.2(1)	Exterior lighting zone	Indicate building exterior lighting zone as defined by the AHJ		
Yes	C405.5.1	Exterior building grounds lighting	For building grounds fixtures rated at greater than 100 watts that are complying based on efficacy, indicate rated lamp efficacy (in lumens per watt) in fixture schedule		
Yes	C405.5.2	Exterior lighting power calculations	Complete required compliance form – proposed wattage for exterior lighting plus base site allowed does not exceed maximum allowed		

The following information is necessary to check a permit application for compliance with the lighting, motor, and electrical requirements in the Washington State Energy Code, Commercial Provisions.

berger PARTNERSHIP
1927 Post Alley, Ste. 2
Seattle, WA 98101
206.325.6977
bergerpartnership.com

NAC ENGINEERING
nacarchitecture.com
2025 FIRST AVE | SUITE 300
SEATTLE WA 98121
P:206.441.4522

Totem Lake Park Phase 1
City of Kirkland
12031 Totem Lake Way, Kirkland, WA 98034

MARK ADRIAN MCMICHAEL — STATE OF WASHINGTON — 34258 — REGISTERED PROFESSIONAL ENGINEER

SET TYPE:
Bid Set

SET ISSUE DATE:
09/13/2019

REVISIONS:

Δ	DESCRIPTION	DATE

DRAWN/CHECKED:
Author / Checker

SHEET NAME:
WSEC COMPLIANCE FORMS

SHEET NUMBER:
E004

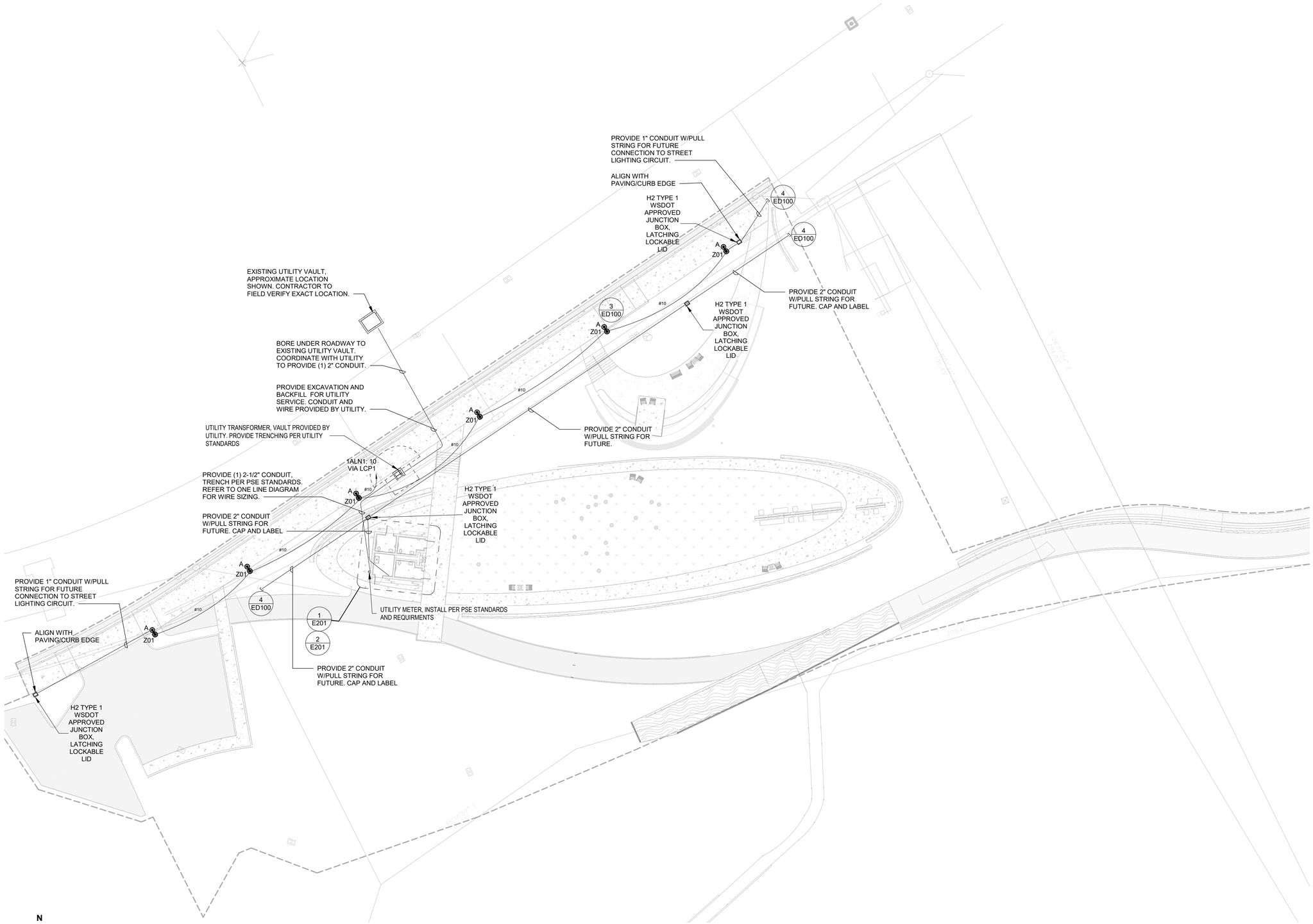

N

ELECTRICAL SITE PLAN

Scale 1" = 20'-0"

Plotted: 9/5/2019 8:40:11 AM Filename: D:_Revit\Totem Lake Park-PH1_ELEC_Liverson.rvt

Berger Partnership Project Number:

PARTNERSHIP berger
1927 Post Alley, Ste. 2
Seattle, WA 98101
206 325 6877
bergerpartnership.com

NAC ENGINEERING
nacarchitecture.com
2025 FIRST AVE | SUITE 300
SEATTLE WA 98121
P:206.441.4522

Totem Lake Park Phase 1

City of Kirkland

12031 Totem Lake Way, Kirkland, WA 98034

MARK ADRIAN MOMICHI
STATE OF WASHINGTON
34258
REGISTERED
PROFESSIONAL ENGINEER

SET TYPE:
Bid Set

SET ISSUE DATE:
09/13/2019

REVISIONS:

Δ	DESCRIPTION	DATE
1	Permit Response	06/10/19

DRAWN/CHECKED:
LAI / MAM

SHEET NAME:
ELECTRICAL SITE PLAN

SHEET NUMBER:
E101

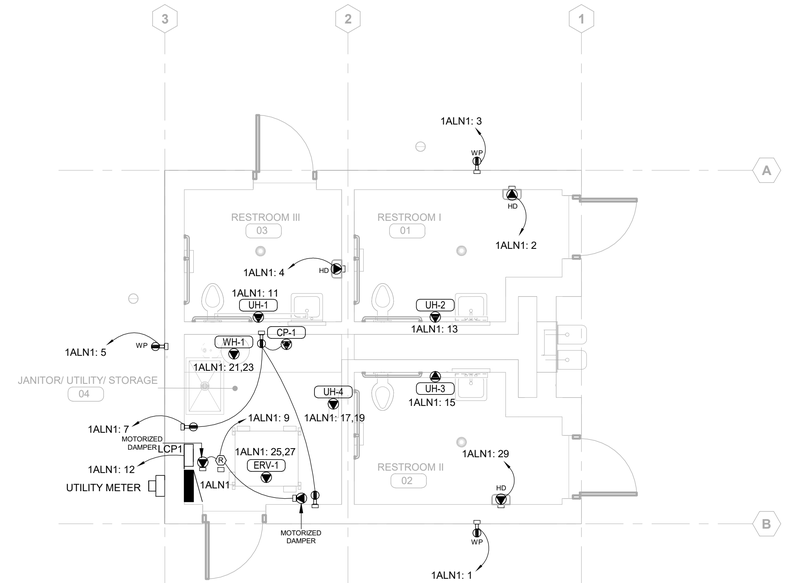

N

1 MECHANICAL BUILDING ELECTRICAL PLAN

1/4" = 1'-0"

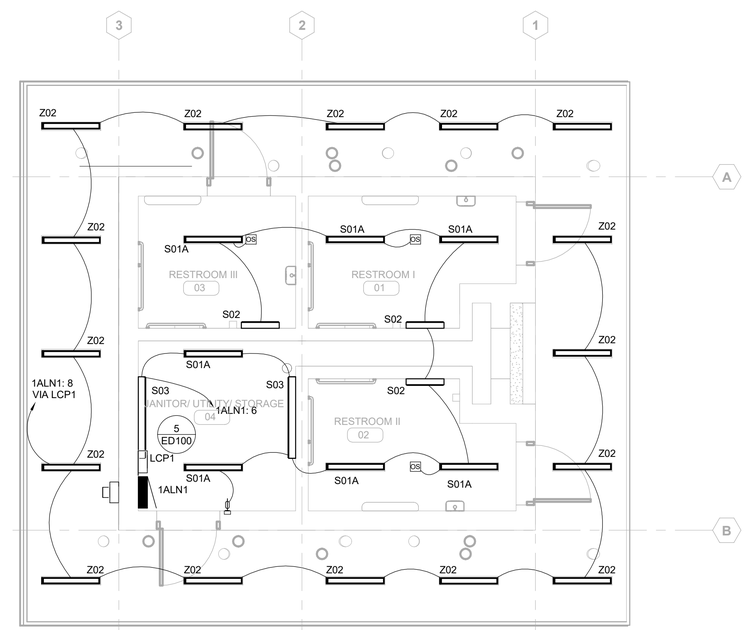

N

2 MECHANICAL BUILDING LIGHTING PLAN

1/4" = 1'-0"

PARTNERSHIP
berger
1927 Post Alley, Ste. 2
Seattle, WA 98101
206.325.6877
bergerpartnership.com

NAC
ENGINEERING
nacarchitecture.com
2025 FIRST AVE | SUITE 300
SEATTLE WA 98121
P:206.441.4522

Totem Lake Park Phase 1

City of Kirkland

12031 Totem Lake Way, Kirkland, WA 98034

MARK ADRIAN MOMICA
STATE OF WASHINGTON
34258
REGISTERED
PROFESSIONAL ENGINEER

SET TYPE:
Bid Set

SET ISSUE DATE:
09/13/2019

REVISIONS:

Δ	DESCRIPTION	DATE

DRAWN/CHECKED:
LAI / MAM

SHEET NAME:
ENLARGED BUILDING PLANS

SHEET NUMBER:
E201

Plotted: 9/5/2019 8:40:13 AM
Filename: D:_Revit\Totem Lake Park-PH1_ELEC_Liverson.rvt
Berger Partnership Project Number:

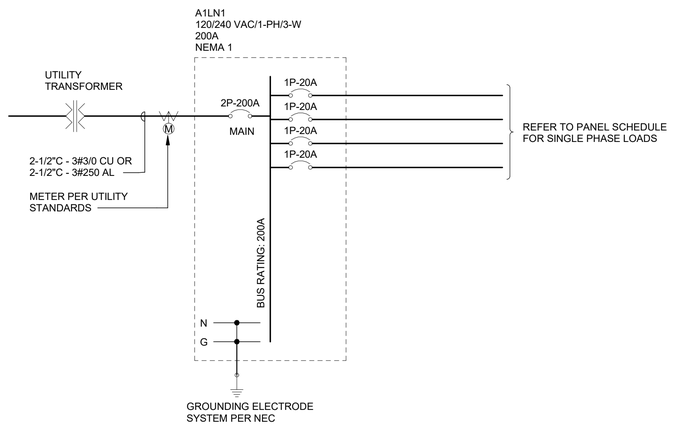

1 ONE-LINE DIAGRAM
Scale:

PANEL: 1ALN1

LOCATION:	JANITOR/ UTILITY/...	VOLTS:	120/240 SINGLE	INTEGRAL SPD:	No	SCCR RATING:	10000
SUPPLY:		PHASES	1	ISO GND BAR:	No	MAINS TYPE:	MCB
MOUNTING:	Surface	WIRES:	3	FEED-THRU LUGS:	No	MAINS RATING:	200 A
ENCLOSURE:	Type 1	BUS RATING:	200	WIREWAY TO FLR:	Yes		

CCT	LOAD NAME	CCT NOTE	TRIP	POLE	A		B		POLE	TRIP	CCT NOTE	LOAD NAME	CCT
1	REC EXTERIOR SOUTH		20	1	180	1500			1	20		NCONT RESTROOM I 01	2
3	REC EXTERIOR NORTH		20	1			180	1500	1	20		NCONT RESTROOM III 03	4
5	REC EXTERIOR WEST		20	1	180	210			1	20		LTG Room 03, 04, 02, 01	6
7	JANITOR/ UTILITY/ STORAGE 04 ,REC		15	1			550	173	1	20		LTG EXTERIOR	8
9	NCONT JANITOR/ UTILITY/ STORAGE 04		20	1	100	318			1	20		LTG STREET	10
11	Other RESTROOM III 03 UH-1		20	1			840	250	1	20		LCP1	12
13	Other RESTROOM I 01 UH-2		20	1	1128	0			1	20		--	14
15	Other RESTROOM II 02 UH-3		20	1			1128	0	1	20		--	16
17	Other JANITOR/ UTILITY/ STORAGE 04		20	2	1000	0			1	20		--	18
19	UH-4						1000	0	1	20		--	20
21	Other JANITOR/ UTILITY/ STORAGE 04		20	2	1500	0			1	20		--	22
23	WH-1						1500	0	1	20		--	24
25	Motor JANITOR/ UTILITY/ STORAGE 04		20	2	173	0			1	20		--	26
27	ERV-1						173	0	1	20		--	28
29	NCONT RESTROOM II 02		20	1	1500	0			1	20		--	30
31	--		20	1			0	0	1	20		--	32
33	--		20	1	0	0			1	20		--	34
35	--		20	1			0	0	1	20		--	36
37	--		20	1	0	0			1	20		--	38
39	--		20	1			0	0	1	20		--	40
41	--		20	1	0	0			1	20		--	42

SPECIAL PANEL FEATURES:				CIRCUITING NOTES:
	CONN LOAD:	7788 VA	7293 VA	
A. SERVICE ENTRANCE RATED	DMND LOAD:	8274 VA	7748 VA	1.
B.	DMND AMPS:	69 A	65 A	2.
C.				3.
D.				4.

LOAD CLASSIFICATION	CONNECTED...	DEMAND...	DEMAND LOAD	PANEL TOTALS	
LTG	700 VA	125.00%	876 VA	EXG DEMAND CURRENT @ 125%	
Motor	3346 VA	122.42%	4096 VA	TOTAL NEW CONNECTED LOAD:	14831 VA
Other	5105 VA	100.00%	5105 VA	TOTAL NEW DEMAND LOAD:	15756 VA
REC	1080 VA	100.00%	1080 VA	TOTAL NEW CONN CURRENT:	61.80 A
NCONT	4600 VA	100.00%	4600 VA	TOTAL NEW DEMAND CURRENT:	65.65 A
				TOTAL EXG + NEW CURRENT:	**66 A**
				UNBALANCED CURRENT:	4 A
LINE TOTALS:	14831 VA	106.24%	15756 VA		

Totem Lake Park Phase 1 #

- MECHANICAL ENERGY RECOVERY VENTILATOR SCHEDULE -

ID	DESCRIPTION	ROOM #	ROOM NAME	PANEL	CIRCUIT #	ELECT DATA	MOTOR HP	MOTOR FLA	CONNECTION TYPE	CB SIZE	DISC SIZE	FUSE SIZE	# PHASE WIRES	PHASE SIZE	NEUTRAL SIZE	GROUND SIZE	RACEWAY SIZE	STARTER TYPE	STARTER SIZE	REMARKS
ERV-1	ENERGY RECOVERY VENTILATOR	04	JANITOR/ UTILITY/ STORAGE	1ALN1	25,27	240 V/2-346 VA	1/2	1.4 A	DIRECT	20	30/2	2	2	12	-	12	3/4"	FVNR	1	PROVIDE CONTROL WIRING FROM ENERGY RECOVERY VENTILATOR TO INTERFACE RELAY AS SHOWN ON THE ENLARGED POWER PLAN. SEE MECHANICAL PLANS FOR EXACT LOCATION OF EXHAUST/ RETURN AIR DAMPERS. INTERLOCK ON/OFF CONTROLS FOR ENERGY RECOVERY VENTILATOR WITH MOTORIZED DAMPERS FOR EACH DUCT. CONFIRM CONTROL VOLTAGE WITH UNIT MANUFACTURER AND PROVIDE CURRENT TRANSFORMERS AS NECESSARY TO COMPLETE INSTALLATION.

- MECHANICAL ELECTRIC UNIT HEATER SCHEDULE -

ID	DESCRIPTION	ROOM #	ROOM NAME	PANEL	CIRCUIT #	ELECT DATA	MOTOR HP	MOTOR FLA	CONNECTION TYPE	CB SIZE	DISC SIZE	FUSE SIZE	# PHASE WIRES	PHASE SIZE	NEUTRAL SIZE	GROUND SIZE	RACEWAY SIZE	STARTER TYPE	STARTER SIZE	REMARKS
UH-1	ELECTRIC UNIT HEATER	03	RESTROOM III	1ALN1	11	120 V/1-840 VA	-	7.0 A	DIRECT	20	30/1	-	1	12	12	12	3/4"	MMS	-	
UH-2	ELECTRIC UNIT HEATER	01	RESTROOM I	1ALN1	13	120 V/1-1128 VA	-	9.4 A	DIRECT	20	30/1	-	1	12	12	12	3/4"	MMS	-	
UH-3	ELECTRIC UNIT HEATER	02	RESTROOM II	1ALN1	15	120 V/1-1128 VA	-	9.4 A	DIRECT	20	30/1	-	1	12	12	12	3/4"	MMS	-	
UH-4	ELECTRIC UNIT HEATER	04	JANITOR/ UTILITY/ STORAGE	1ALN1	17,19	240 V/2-1999 VA	-	8.3 A	DIRECT	20	30/2	-	2	12	-	12	3/4"	MMS	-	

- MECHANICAL ELECTRIC WATER HEATER SCHEDULE -

ID	DESCRIPTION	ROOM #	ROOM NAME	PANEL	CIRCUIT #	ELECT DATA	MOTOR HP	MOTOR FLA	CONNECTION TYPE	CB SIZE	DISC SIZE	FUSE SIZE	# PHASE WIRES	PHASE SIZE	NEUTRAL SIZE	GROUND SIZE	RACEWAY SIZE	STARTER TYPE	STARTER SIZE	REMARKS
WH-1	ELECTRIC WATER HEATER	04	JANITOR/ UTILITY/ STORAGE	1ALN1	21,23	240 V/2-3000 VA	-	12.5 A	DIRECT	20	30/2	-	2	12	-	12	3/4"	-	-	

- MECHANICAL PUMP SCHEDULE -

ID	DESCRIPTION	ROOM #	ROOM NAME	PANEL	CIRCUIT #	ELECT DATA	MOTOR HP	MOTOR FLA	CONNECTION TYPE	CB SIZE	DISC SIZE	FUSE SIZE	# PHASE WIRES	PHASE SIZE	NEUTRAL SIZE	GROUND SIZE	RACEWAY SIZE	STARTER TYPE	STARTER SIZE	REMARKS
CP-1	CIRCULATION PUMP	04	JANITOR/ UTILITY/ STORAGE	1ALN1	7	120 V/1-10 VA	-	0.1 A	DIRECT	15	20/1	-	1	12	12	12	3/4"	MMS	-	

- INTERIOR LUMINAIRE SCHEDULE -

TYPE	MANUFACTURER	CATALOG #	ACCESSORIES	VOLTAGE	VA	WATTS	EFFICACY	DELIVERED LUMENS	K TEMP	CRI	NOTES
S01A	FINELITE	HP-4 WL SM 3' B 835 F SC C4		120 V	14	14	97 Lm/W	1780	3500		FIXTURES TO BE INSTALLED CENTERED WITHIN POCKETS PROVIDED. COORDINATE LOCATION WITH ARCHITECTURAL. ENSURE CONDUIT IS NOT VISIBLE FROM BELOW
S02	KENNAL	MLHA5 24 R * PP 25L35 DCC 1 120		120 V	25	25	95 Lm/W	2734	3500		MOUNT AT 7'-0" AFF AND CENTERED ON MIRROR
S03	COLUMBIA	LCL 435 LW E U		120 V	19	19	138 LmW	2576	3500		MOUNT FIXTURE AT 7'-0" AFF. CORRDINATE EXACT LOCATION WITH MECHANICAL TO AVOID CONFLICT

- EXTERIOR LUMINAIRE SCHEDULE -

TYPE	MANUFACTURER	CATALOG #	ACCESSORIES	VOLTAGE	VA	WATTS	EFFICACY	DELIVERED LUMENS	K TEMP	CRI	DISTRIBUTION TYPE	NOTES
Z01	NERI	SU-312L-06-3-P6-02 (A SO-UL-312-LED-NLG-06-4000K-4500LM		120 V	53	48	94 Lm/W	4500	4000	70+	V	PROVIDE CUSTOM POLE 1307.701 WITH AGL FLANGE HAND HOLE AND CUSTOM G-NECK 102.140.500 W/ CURLS TO MATCH EXISTING.
Z02	FINELITE	HP-4 WL SM 3' S 835 F SC C4		120 V	11	11	97 Lm/W	1780	3500	80+		FIXTURES TO BE INSTALLED CENTERED WITHIN POCKETS PROVIDED. COORDINATE LOCATION WITH ARCHITECTURAL. ENSURE CONDUIT IS NOT VISIBLE FROM BELOW

PARTNERSHIP berger
1927 Post Alley, Ste. 2
Seattle, WA 98101
206.325.6877
bergerpartnership.com

NAC ENGINEERING
nacarchitecture.com
2025 FIRST AVE | SUITE 300
SEATTLE WA 98121
P:206.441.4522

Totem Lake Park Phase 1
City of Kirkland
12031 Totem Lake Way, Kirkland, WA 98034

MARK ADRIAN MCMICKLE
STATE OF WASHINGTON
34258
REGISTERED
PROFESSIONAL ENGINEER

SET TYPE:
Bid Set

SET ISSUE DATE:
09/13/2019

REVISIONS:

Δ	DESCRIPTION	DATE
1	Permit Response	06/10/19

DRAWN/CHECKED:
LAI / MAM

SHEET NAME:
ONE-LINE DIAGRAM AND SCHEDULES

SHEET NUMBER:
E301

Plotted: 9/5/2019 8:40:13 AM Filename: D:_Revit\Totem Lake Park-PH1_ELEC_Liverson.rvt

Berger Partnership Project Number:

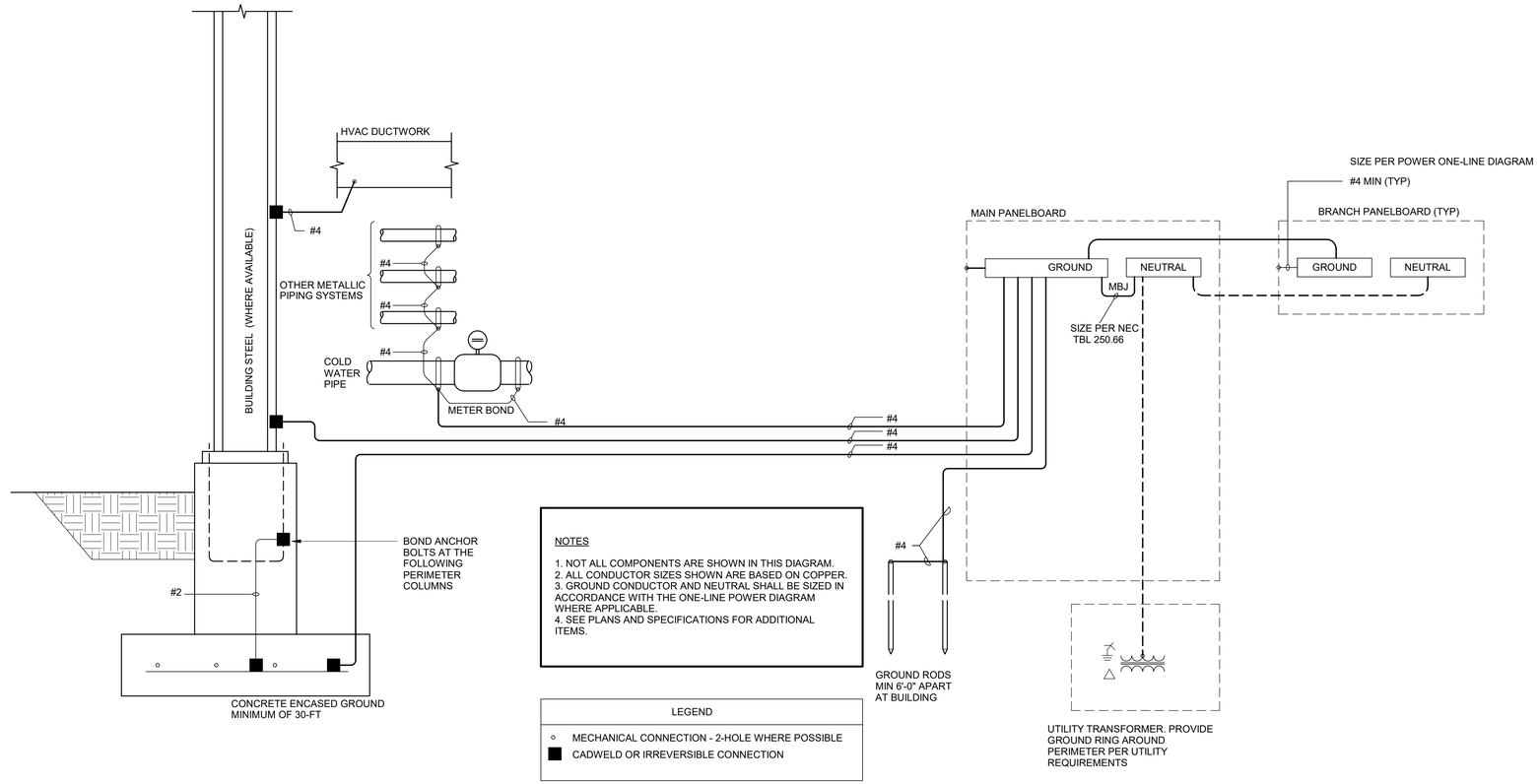

NOTES

1. NOT ALL COMPONENTS ARE SHOWN IN THIS DIAGRAM.
2. ALL CONDUCTOR SIZES SHOWN ARE BASED ON COPPER.
3. GROUND CONDUCTOR AND NEUTRAL SHALL BE SIZED IN ACCORDANCE WITH THE ONE-LINE POWER DIAGRAM WHERE APPLICABLE.
4. SEE PLANS AND SPECIFICATIONS FOR ADDITIONAL ITEMS.

LEGEND

- ○ MECHANICAL CONNECTION - 2-HOLE WHERE POSSIBLE
- ■ CADWELD OR IRREVERSIBLE CONNECTION

1 GROUNDING DIAGRAM
Scale: NTS

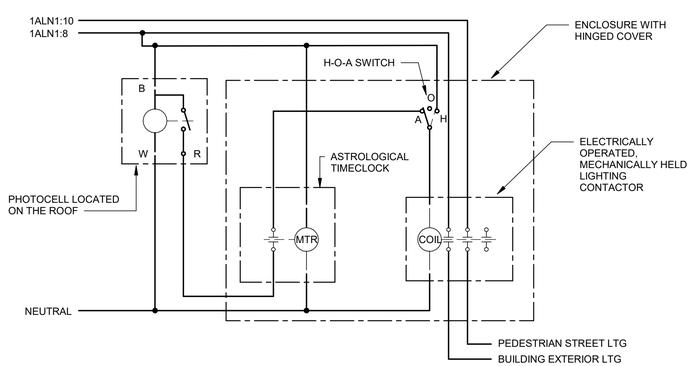

5 EXTERIOR LIGHTING CONTROL DIAGRAM
Scale: NTS

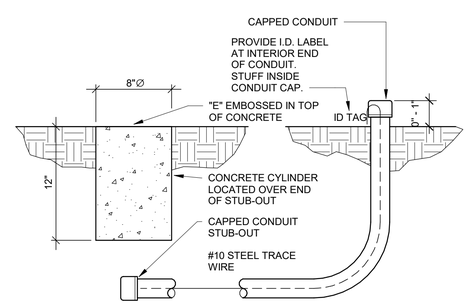

4 STUB-OUT LOCATOR
Scale: NTS

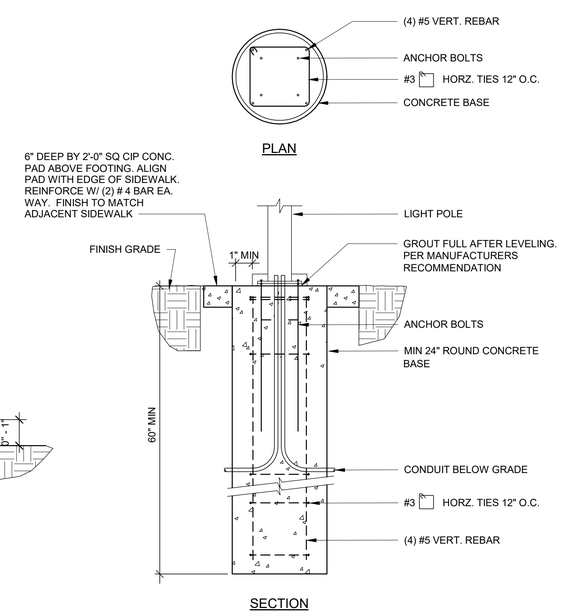

3 POLE BASE DETAIL - STYLE A
Scale: NTS

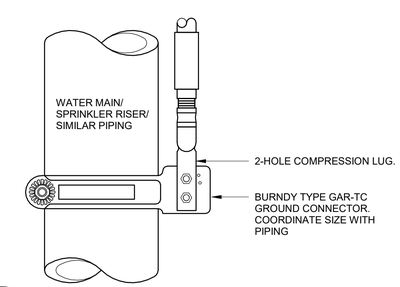

2 WATER PIPE CONNECTION
Scale: NTS

berger PARTNERSHIP
1927 Post Alley, Ste. 2
Seattle, WA 98101
206.325.6877
bergerpartnership.com

NAC ENGINEERING
nacarchitecture.com
2025 FIRST AVE | SUITE 300
SEATTLE WA 98121
P:206.441.4522

Totem Lake Park Phase 1
City of Kirkland
12031 Totem Lake Way, Kirkland, WA 98034

MARK ADRIAN MCMICKEN
STATE OF WASHINGTON
34258
REGISTERED
PROFESSIONAL ENGINEER

SET TYPE:
Bid Set

SET ISSUE DATE:
09/13/2019

REVISIONS:

Δ	DESCRIPTION	DATE

DRAWN/CHECKED:
LAI / MAM

SHEET NAME:
DETAILS

SHEET NUMBER:
ED100

Filename: D:_Revit\Totem Lake Park-PH1_ELEC_Liverson.rvt
Plotted: 9/5/2019 8:40:14 AM
Berger Partnership Project Number:

IRRIGATION SCHEDULE

SYMBOL	MANUFACTURER/MODEL/DESCRIPTION	PSI
Q T H F	HUNTER PROS–04–PRS40–CV 8' RADIUS TURF SPRAY, 40PSI REGULATED 4" POP–UP, DRAIN CHECK VALVE	30
Q T H F	HUNTER PROS–04–PRS40–CV 10' RADIUS TURF SPRAY, 40PSI REGULATED 4" POP–UP, DRAIN CHECK VALVE	30
Q T H TT TQ F	HUNTER PROS–04–PRS40–CV 12' RADIUS TURF SPRAY, 40PSI REGULATED 4" POP–UP, DRAIN CHECK VALVE	30
Q T H TT TQ F	HUNTER PROS–04–PRS40–CV 15' RADIUS TURF SPRAY, 40PSI REGULATED 4" POP–UP, DRAIN CHECK VALVE	30
T	HUNTER MP CORNER PROS–12–PRS40–CV SHRUB ROTATOR, 12" (30.48 CM) POP–UP WITH FACTORY INSTALLED CHECK VALVE, PRESSURE REGULATED TO 40 PSI (2.76 BAR), MP ROTATOR NOZZLE. T=TURQUOISE ADJ ARC 45–105 ON PRS40 BODY.	40
LST RST SST	HUNTER MP STRIP PROS–12–PRS40–CV SHRUB ROTATOR, 12" (30.48 CM) POP–UP WITH FACTORY INSTALLED CHECK VALVE, PRESSURE REGULATED TO 40 PSI (2.76 BAR), MP ROTATOR NOZZLE. LST=IVORY LEFT STRIP, SST=BROWN SIDE STRIP, RST=COPPER RIGHT STRIP, ON PRS40 BODY.	40
M L O	HUNTER MP1000 PROS–12–PRS40–CV SHRUB ROTATOR, 12" (30.48 CM) POP–UP WITH CHECK VALVE, PRESSURE REGULATED TO 40 PSI (2.76 BAR), MP ROTATOR NOZZLE. M=MAROON ADJ ARC 90 TO 210, L=LIGHT BLUE 210 TO 270 ARC, O=OLIVE 360 ARC ON PRS40 BODY.	40
K G R	HUNTER MP2000 PROS–12–PRS40–CV SHRUB ROTATOR, 12" (30.48 CM) POP–UP WITH CHECK VALVE, PRESSURE REGULATED TO 40 PSI (2.76 BAR), MP ROTATOR NOZZLE. K=BLACK ADJ ARC 90–210, G=GREEN ADJ ARC 210–270, R=RED 360 ARC ON PRS40 BODY.	40
ADJ. 360	HUNTER MP800SR PROS–12–PRS40–CV SHRUB ROTATOR, 12.0" POP–UP WITH CHECK VALVE, PRESSURE REGULATED TO 40 PSI (2.76 BAR), MP ROTATOR NOZZLE ON PRS40 BODY. OR = ORANGE ADJ ARC 90 TO 210.	40
M L O	HUNTER MP815 PROS–12–PRS40–CV SHRUB ROTATOR, 12" POP–UP WITH CHECK VALVE, PRESSURE REGULATED TO 40 PSI, MP ROTATOR NOZZLE. M=MAROON AND GRAY ADJ ARC 90 TO 210, L=LIGHT BLUE AND GRAY 210 TO 270 ARC, O=OLIVE AND GRAY 360 ARC ON PRS40 BODY.	40

SYMBOL	MANUFACTURER/MODEL/DESCRIPTION	PSI	GPM	RADIUS
12.0	HUNTER PGP–12 SHRUB ROTOR, 12.0" POP–UP. ADJUSTABLE TO FULL CIRCLE.	35	3.50	39'

SYMBOL	MANUFACTURER/MODEL/DESCRIPTION
	WEATHERMATIC 8200CR–XPR BRASS REMOTE CONTROL VALVE WITH PRESSURE REGULATOR
	HUNTER HQ–44LRC QUICK COUPLER VALVE, YELLOW RUBBER LOCKING COVER, RED BRASS AND STAINLESS STEEL, WITH 1" NPT INLET, 2–PIECE BODY.
	MATCO–NORCA 759 BRASS SHUT OFF BALL VALVE, 1/2" TO 4". TWO PIECE BODY, BLOW–OUT PROOF STEM, CHROME PLATED SOLID BRASS BALL, THREADED, WITH PTFE SEATS. SAME SIZE AS MAINLINE PIPE.
MV	WEATHERMATIC 8200CR–XPR 1" BRASS REMOTE CONTROL VALVE WITH PRESSURE REGULATOR
	1" WILKENS 600 SERIES PRESSURE REDUCING VALVE PRESSURE LIMITED TO 119.99 PSI SET TO 90 P.S.I.
BF	FEBCO 850U 1" DOUBLE CHECK BACKFLOW PREVENTION WITH UNION END BALL VALVE, 1/2" TO 2".
C	CALSENSE ET3000E SERIES CONTROLLER CONTROLLER SHALL BE 16 STATION CALSENSE ET3000E SERIES WITH LR (INTERNAL LOCAL RADIO MODEM) AND RRE (ENHANCED RADIO REMOTE RECEIVER BOARD) COMPONENTS. THE CONTROLLER SHALL BE HOUSED IN A FACTORY PRE–ASSEMBLED, UL–LISTED, WEATHER PROOF, LOCKABLE, STAINLESS STEEL ENCLOSURE (BY CALSENSE) SUITABLE FOR WALL MOUNTING (SSE–R).
FS	1" CALSENSE FLOW SENSOR FM–1B
M	WATER METER 3/4"
	IRRIGATION LATERAL LINE: PVC SCHEDULE 40
	IRRIGATION MAINLINE: PVC SCHEDULE 40
	PIPE SLEEVE: PVC SCHEDULE 40

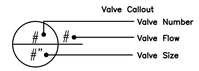

IRRIGATION NOTES

1. PROVIDE AND INSTALL ALL IRRIGATION IN CONFORMANCE WITH THE CITY OF KIRKLAND STANDARDS. IN THE EVENT OF CONFLICT BETWEEN NOTES OR DETAILS AND THESE DOCUMENTS, THE STANDARDS SHALL TAKE PRECEDENCE.
2. CONTRACTOR SHALL COMPLY WITH ALL APPLICABLE CODES AND APPROPRIATE SAFETY REGULATIONS.
3. DRAWING IS SCHEMATIC. ACTUAL LOCATIONS MAY VARY DUE TO UTILITIES OR EXISTING CONDITIONS. CONTRACTOR IS RESPONSIBLE FOR LOCATING UTILITIES PRIOR TO BEGINNING CONSTRUCTION.
4. EXISTING STATIC P.S.I AT IRRIGATION METER IS 108 P.S.I. PRIOR TO INSTALLATION OF IRRIGATION SYSTEM, CONTRACTOR SHALL FIELD VERIFY EXISTING P.S.I. NOTIFY OWNER'S REPRESENTATIVE OF ANY DISCREPANCIES BETWEEN THE DESIGN P.S.I. PRIOR TO PROCEEDING W/ WORK.
5. LOCATE QUICK COUPLING VALVE & AUTOMATIC CONTROL VALVES AT POINT OF EASY ACCESS. OWNER'S REPRESENTATIVE TO REVIEW & APPROVE FINAL LOCATION OF ALL QUICK COUPLERS & AUTOMATIC CONTROL VALVES PRIOR TO INSTALLATION.
6. HEAD LOCATION MUST BE ADJUSTED IN THE FIELD TO COMPLY W/ EXISTING SITE CONDITIONS AND PLANT MATERIALS. ADJUST SPRAY PATTERN FOR MAXIMUM COVERAGE AND MINIMUM OVERSPRAY.
7. ALL SHRUB AREA POP–UP SPRAY HEADS TO BE 6" HEIGHT. ALL TURF AREA POP–UPS TO BE 4" IN HEIGHT. (UNLESS OTHERWISE SPECIFIED ON PLAN)
8. CONTRACTOR SHALL COORDINATE IRRIGATION SLEEVING W/ PAVING WORK AS REQUIRED.
9. ALL IRRIGATION SLEEVES SHALL BE TWICE THE DIAMETER OF THE INSERT PIPE(S). SLEEVES SHALL NOT EXCEED 6" DIAMETER.
10. IRRIGATION CONTRACTOR TO PROVIDE AND INSTALL ALL REQUIRED PLUMBING SLEEVES WHERE NECESSARY. ALL IRRIGATION SLEEVING TO BE STAKED IN THE FIELD & LOCATED ON DIMENSIONED "AS–BUILT" DRAWING TO ALLOW FUTURE LOCATION & USE.
11. AIR BLOW IRRIGATION SYSTEM THROUGH QUICK COUPLERS TO WINTERIZE IRRIGATION SYSTEM.
12. PIPES TO SHARE TRENCHES WHERE POSSIBLE. SEPARATE COMMON PIPING BY 6" MIN.
13. WHERE PIPE SIZES ARE NOT SHOWN ON THE PLAN, PIPE SHALL BE SIZED TO THE NEXT LARGEST PIPE SIZE SHOWN UPSTREAM ON THE PLAN.
14. WHEN TRENCHING OCCURS AROUND TREES TO REMAIN, THE TREE ROOTS SHALL NOT BE CUT, BUT THE PIPE SHALL BE TUNNELED UNDER OR AROUND THE ROOTS BY CAREFUL HAND–DIGGING & TO AVOID INJURY TO THE ROOTS.
15. GENERAL CONTRACTOR TO PROVIDE AND INSTALL ALL CONDUIT TO CLOCK LOCATION.
16. GENERAL CONTRACTOR TO PROVIDE POWER SOURCE FOR CLOCK. (VERIFY LOCATION PRIOR TO BEGINNING WORK)

VALVE SCHEDULE

NUMBER	MODEL	SIZE	TYPE	GPM	PSI	PSI @ POC	PRECIP
1	WEATHERMATIC 8200CR–XPR	1"	SHRUB ROTARY	11.07	42.74	64.76	0.29 in/h
2	WEATHERMATIC 8200CR–XPR	1"	SHRUB ROTARY	14.06	46.04	68.07	0.19 in/h
3	WEATHERMATIC 8200CR–XPR	1"	SHRUB ROTARY	11.55	48.07	70.12	0.23 in/h
4	WEATHERMATIC 8200CR–XPR	1"	SHRUB ROTARY	12.33	49.00	71.07	0.26 in/h
5	WEATHERMATIC 8200CR–XPR	1"	SHRUB ROTARY	11.84	43.25	65.35	0.25 in/h
6	WEATHERMATIC 8200CR–XPR	1"	SHRUB ROTARY	10.36	44.59	66.70	0.22 in/h
7	WEATHERMATIC 8200CR–XPR	1"	SHRUB ROTARY	13.66	44.55	64.74	0.66 in/h
8	WEATHERMATIC 8200CR–XPR	1–1/4"	SHRUB ROTARY	10.44	43.27	64.58	0.43 in/h
9	WEATHERMATIC 8200CR–XPR	1"	SHRUB ROTARY	3.96	42.61	64	0.50 in/h
10	WEATHERMATIC 8200CR–XPR	1"	SHRUB ROTARY	7.48	42.19	63.91	0.42 in/h
11	WEATHERMATIC 8200CR–XPR	1"	SHRUB ROTARY	13.29	46.32	68.49	0.33 in/h
12	WEATHERMATIC 8200CR–XPR	1"	SHRUB ROTARY	9.03	42.70	64.88	0.31 in/h
13	WEATHERMATIC 8200CR–XPR	1"	SHRUB ROTARY	14.04	47.22	69.42	0.32 in/h
14	WEATHERMATIC 8200CR–XPR	1"	SHRUB ROTARY	7.15	44.57	66.76	0.22 in/h
15	WEATHERMATIC 8200CR–XPR	1"	SHRUB ROTARY	7.56	44.10	66.27	0.22 in/h
16	WEATHERMATIC 8200CR–XPR	1"	TURF SPRAY	14.47	34.93	62.54	0.76 in/h
17	WEATHERMATIC 8200CR–XPR	1"	TURF SPRAY	10.59	34.04	65.75	0.55 in/h
18	WEATHERMATIC 8200CR–XPR	1"	TURF SPRAY	8.73	32.86	67.16	0.54 in/h
19	WEATHERMATIC 8200CR–XPR	1"	TURF SPRAY	13.02	34.14	80.33	1.12 in/h
20	WEATHERMATIC 8200CR–XPR	1"	TURF SPRAY	13.02	33.20	79.48	1.14 in/h
21	WEATHERMATIC 8200CR–XPR	1"	TURF SPRAY	13.20	33.19	80.97	1.20 in/h
22	WEATHERMATIC 8200CR–XPR	1"	TURF SPRAY	11.70	32.66	80.51	1.20 in/h
23	WEATHERMATIC 8200CR–XPR	1"	TURF SPRAY	13.20	33.33	83.09	1.10 in/h
24	WEATHERMATIC 8200CR–XPR	1"	SHRUB ROTOR	10.50	39.45	89.29	0.56 in/h
25	WEATHERMATIC 8200CR–XPR	1"	SHRUB ROTOR	7.00	38.71	88.63	0.61 in/h
26	WEATHERMATIC 8200CR–XPR	1"	SHRUB ROTOR	14.00	39.12	91.51	0.50 in/h
27	WEATHERMATIC 8200CR–XPR	1"	SHRUB ROTOR	14.00	39.13	91.60	0.48 in/h
28	WEATHERMATIC 8200CR–XPR	1"	SHRUB ROTOR	14.00	39.10	92.92	0.48 in/h
29	WEATHERMATIC 8200CR–XPR	1"	SHRUB ROTOR	14.00	39.18	95.20	0.49 in/h
30	WEATHERMATIC 8200CR–XPR	1"	SHRUB ROTOR	14.00	38.76	94.82	0.51 in/h

PARTNERSHIP berger
1927 Post Alley, Ste. 2
Seattle, WA 98101
206 325 6877
bergerpartnership.com

Design Two Four/Two Six
14835 161ST COURT SE
RENTON, WA 98059-8819
ph. (425) 313-1276
cell (206) 335-7716
www.design2426.com
Landscape Architecture • Irrigation Planning • Athletic Field Design • Construction Management

Totem Lake Park Phase 1
City of Kirkland
12031 Totem Lake Way, Kirkland, WA 98034

STATE OF WASHINGTON
JASON M. ANDERSON
0936 EXP. 08/24/19
LANDSCAPE ARCHITECT

SET TYPE:
Bid Set

SET ISSUE DATE:
09/13/2019

REVISIONS:

DRAWN/CHECKED:
JA

SHEET NAME:
IRRIGATION NOTES & SCHEDULE

SHEET NUMBER:
IR001

Berger Partnership Project Number: XXXXXXXX.XX Plotted: 09.05.2019 11:54 PM By: Jason Anderson Filename: c:\users\jason\dropbox\design 2426\jobs\734- totem lake\drawings\project submittal\revels\totem lake park-ph1_sheet - ip101 - irrigation plan - park.dwg

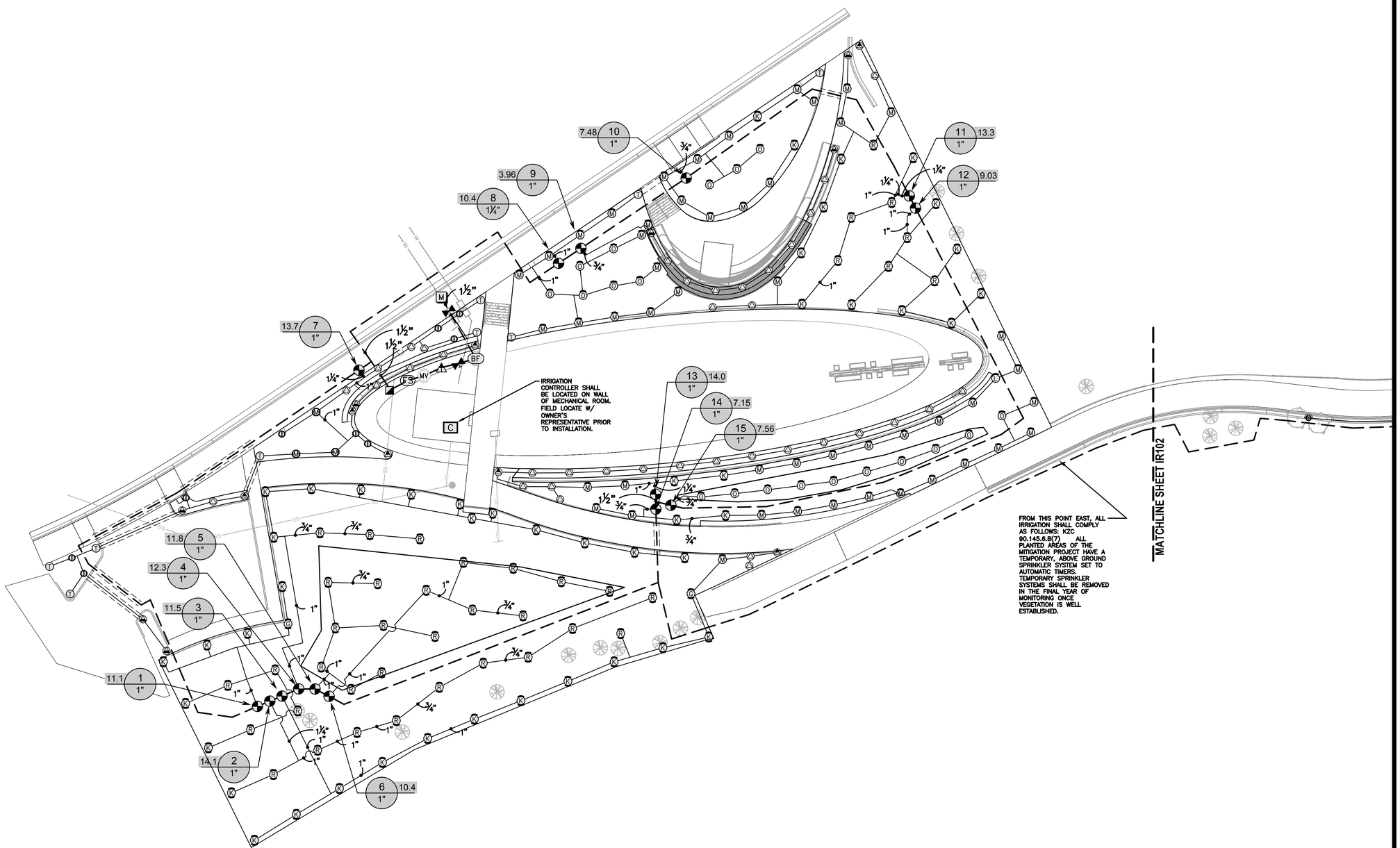

1 IRRIGATION PLAN - PARK
1" = 20'-0"

NORTH

0 20' 40'
SCALE: 1"=20'-0"

PARTNERSHIP berger
1927 Post Alley, Ste. 2
Seattle, WA 98101
206 325 6877
bergerpartnership.com

Design Two Four/Two Six
14835 161ST COURT SE
RENTON, WA 98059-8819
ph. (425) 313-1276
cell. (206) 335-7719
www.design2426.com
Landscape Architecture • Irrigation Planning • Arborist Field Design • Construction Management

Totem Lake Park Phase 1

City of Kirkland

12031 Totem Lake Way, Kirkland, WA 98034

STATE OF WASHINGTON
JASON M. ANDERSON
0938 EXP. 08/24/2020
LANDSCAPE ARCHITECT

SET TYPE:
Bid Set

SET ISSUE DATE:
09/13/2019

REVISIONS:

DRAWN/CHECKED:
JA

SHEET NAME:
IRRIGATION PLAN - PARK

SHEET NUMBER:
IR101

Berger Partnership Project Number: XXXXXXXX.XX Printed: 09.05.2019 11:59 PM By: Jason Anderson Filename: C:\users\jason\dropbox\design 2426\jobs\734- totem lake\drawings\project submittal\xrefs\totem lake park-ph1 sheet - ip101 - irrigation plan - park.dwg

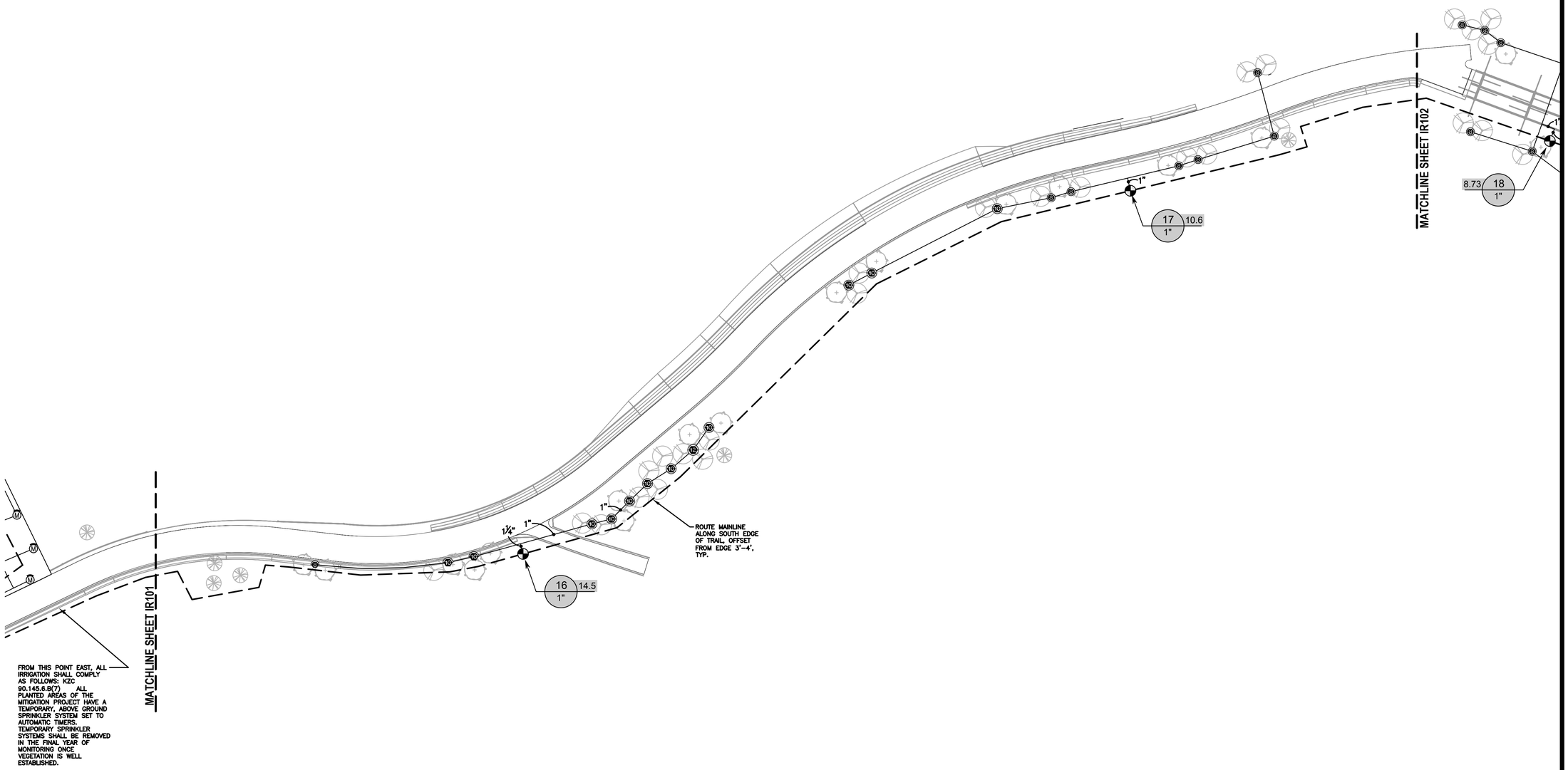

1 IRRIGATION PLAN - TRAIL
1" = 20'-0"

NORTH

0 20' 40'
SCALE: 1"=20'-0"

Berger Partnership Project Number: XXXXXXXX.XX Plotted: 09.08.2019 3:08 PM By: Jason Anderson Filename: C:\users\jason\dropbox\design 2426\jobs\734- totem lake\drawings\project submittal\xrefs\totem lake park-ph1_sheet - ip101 - irrigation plan - park.dwg

Design Two Four/Two Six
14835 161ST COURT SE
RENTON, WA 98059-8819
ph. (425) 313-1276
cell (206) 335-7719
www.design2426.com
Landscape Architecture • Irrigation Planning • Athletic Field Design • Construction Management

PARTNERSHIP berger
1927 Post Alley, Ste. 2
Seattle, WA 98101
206 325 6877
bergerpartnership.com

Totem Lake Park Phase 1
City of Kirkland
12031 Totem Lake Way, Kirkland, WA 98034

STATE OF WASHINGTON
JASON M. ANDERSON
0936 EXP. 08/24/20
LANDSCAPE ARCHITECT

SET TYPE:
Bid Set

SET ISSUE DATE:
09/13/2019

REVISIONS:

DRAWN/CHECKED:
JA

SHEET NAME:
IRRIGATION PLAN - TRAIL

SHEET NUMBER:
IR102

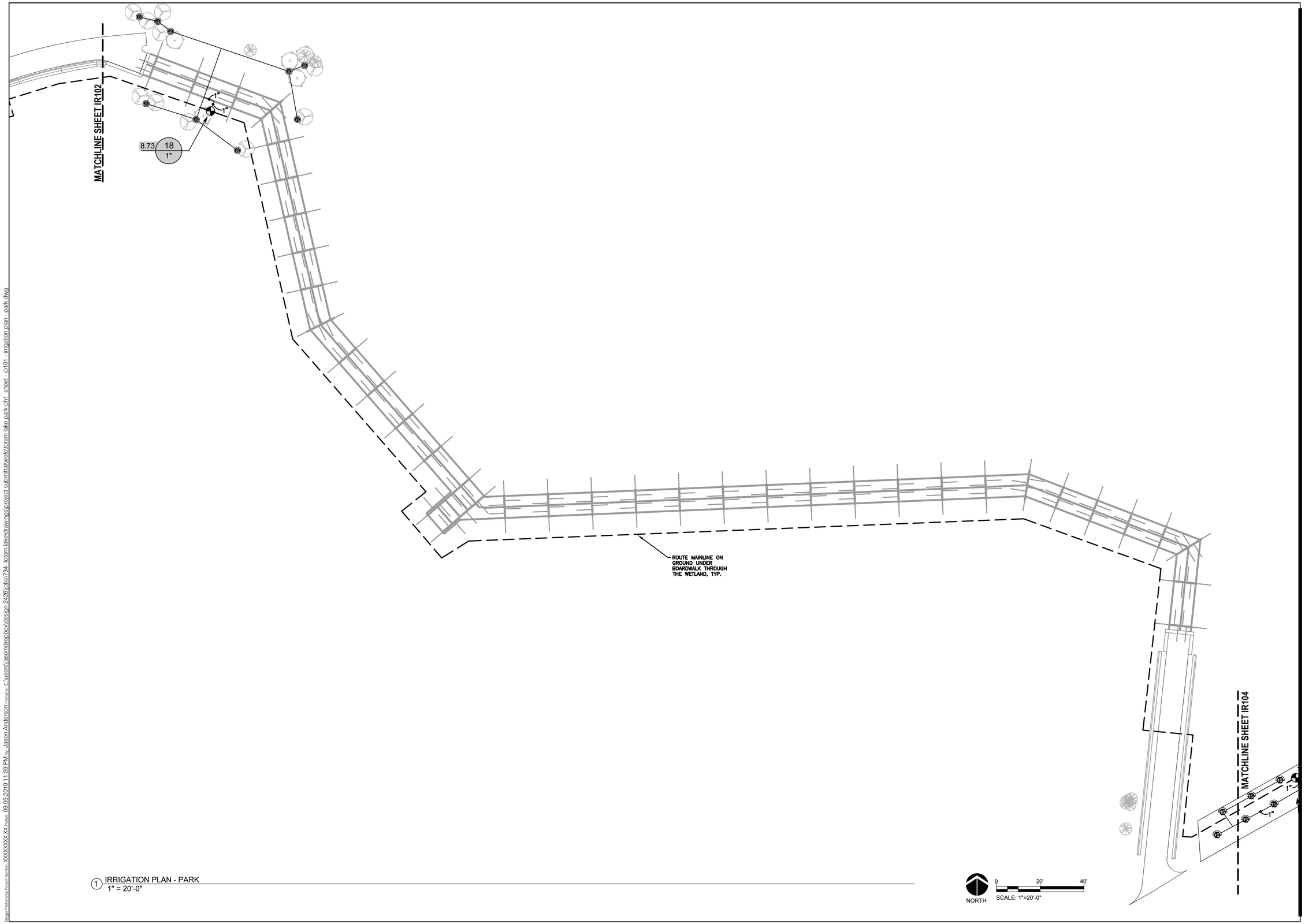

1 IRRIGATION PLAN - PARK
1" = 20'-0"

Berger Partnership Project Number: XXXXXXXX.XX Plotted: 09.05.2019 11:59 PM By: Jason Anderson Filename: c:\users\jason\dropbox\design 2426\jobs\734- totem lake\drawings\project submittal\xrefs\totem lake park-ph1 sheet - ip101 - irrigation plan - park.dwg

Design Two Four/Two Six
14835 161ST COURT SE
RENTON, WA 98059-8819
ph. (425) 881-2426
cell (206) 335-7719
www.design2426.com
Landscape Architecture • Irrigation Planning • Athletic Field Design • Construction Management

PARTNERSHIP berger
1927 Post Alley, Ste. 2
Seattle, WA 98101
206 325 6877
bergerpartnership.com

Totem Lake Park Phase 1

City of Kirkland

12031 Totem Lake Way, Kirkland, WA 98034

STATE OF WASHINGTON
JASON M. ANDERSON
9936 EXP. 08/24/20
LANDSCAPE ARCHITECT

SET TYPE:
Bid Set

SET ISSUE DATE:
09/13/2019

REVISIONS:

DRAWN/CHECKED:
JA

SHEET NAME:
IRRIGATION PLAN - BOARDWALK

SHEET NUMBER:
IR103

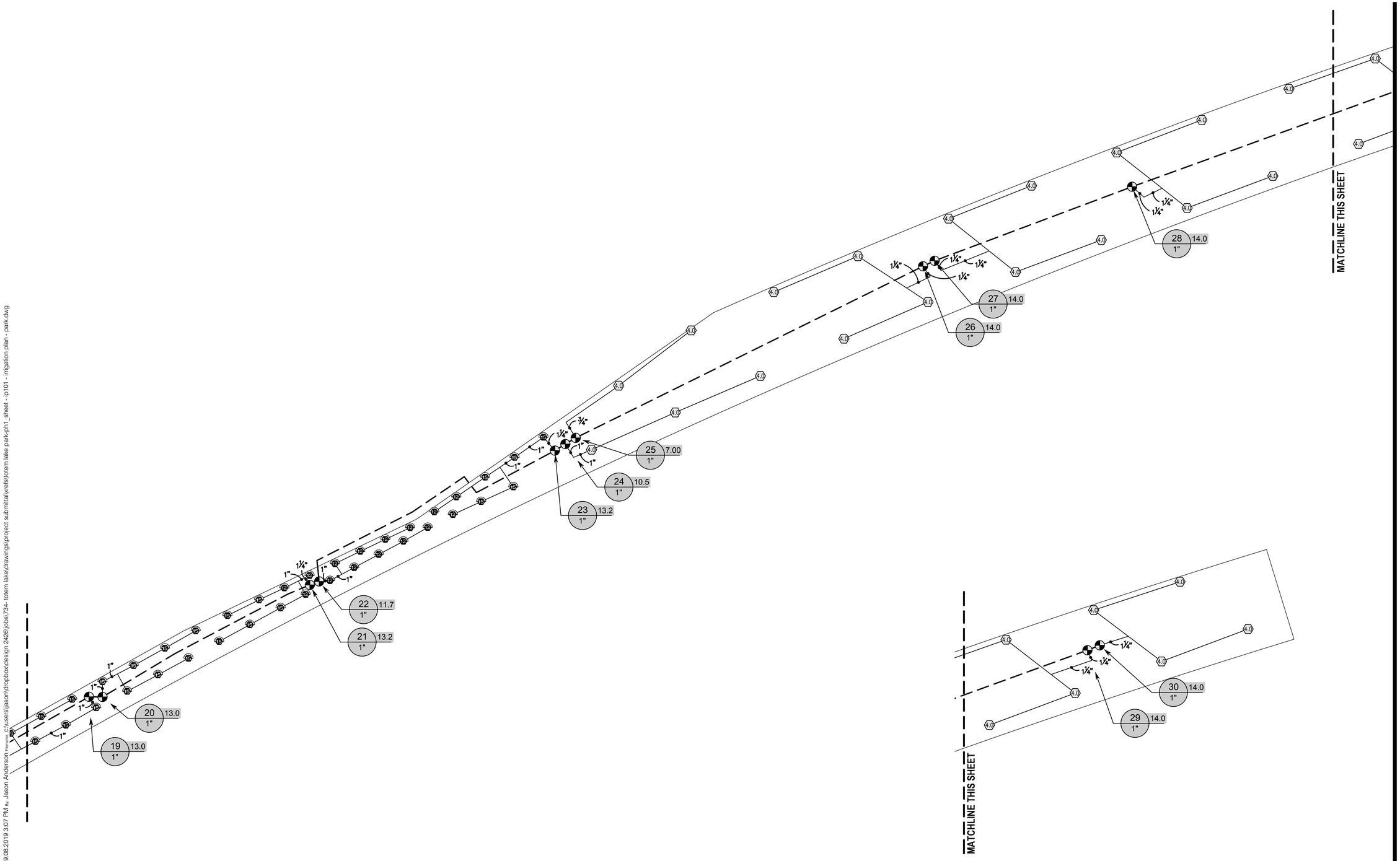

1 IRRIGATION PLAN - BOARDWALK
1" = 20'-0"

NORTH

0 20' 40'
SCALE: 1"=20'-0"

Design Two Four/Two Six
14835 161ST COURT SE
RENTON, WA 98059-8819
ph. (425) 313-2426
cell (206) 335-7719
www.design2426.com
Landscape Architecture • Irrigation Planning • Arborist Field Design • Construction Management

PARTNERSHIP berger
1927 Post Alley, Ste. 2
Seattle, WA 98101
206 325 6877
bergerpartnership.com

Totem Lake Park Phase 1
City of Kirkland
12031 Totem Lake Way, Kirkland, WA 98034

STATE OF WASHINGTON
JASON M. ANDERSON
0938 EXP. 08/24/20
LANDSCAPE ARCHITECT

SET TYPE:
Bid Set

SET ISSUE DATE:
09/13/2019

REVISIONS:

DRAWN/CHECKED:
JA

SHEET NAME:
IRRIGATION PLAN - BOARDWALK

SHEET NUMBER:
IR104

Berger Partnership Project Number: XXXXXXXX.XX Plotted: 09.08.2019 3:07 PM By: Jason Anderson Filename: C:\users\jason\dropbox\design 2426\jobs\734- totem lake\drawings\project submittal\xrefs\totem lake park-ph1_sheet - ip101 - irrigation plan - park.dwg

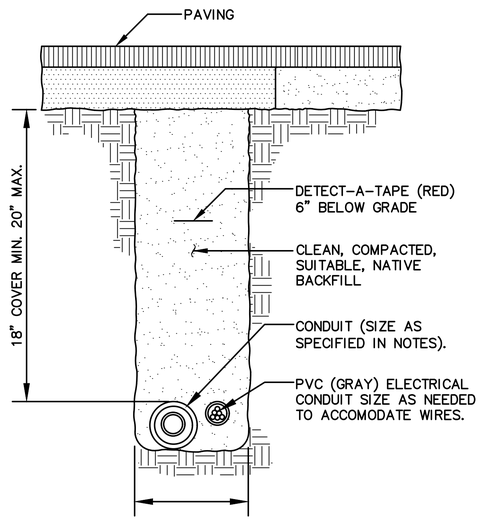

1 TRENCHING UNDER ASPHALT
SCALE: NTS

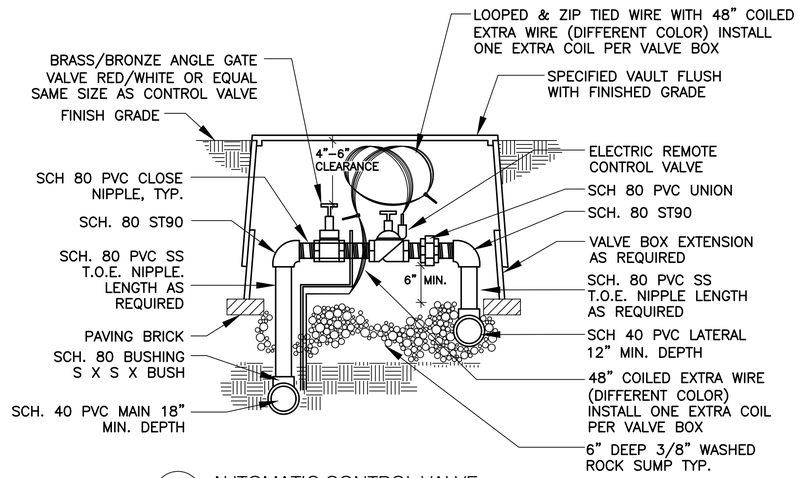

2 AUTOMATIC CONTROL VALVE
SCALE: NTS

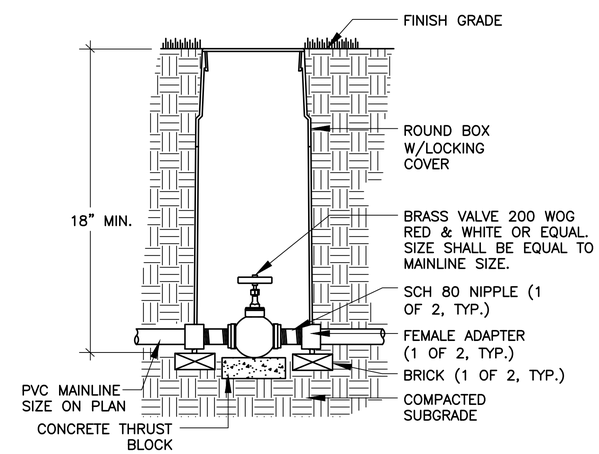

3 AUTOMATIC CONTROL VALVE
SCALE: NTS

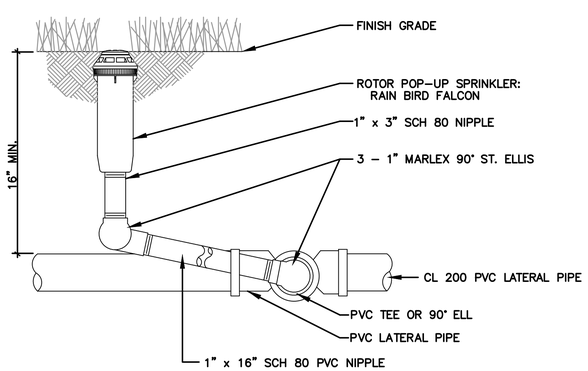

4 ROTOR HEAD
SCALE: NTS

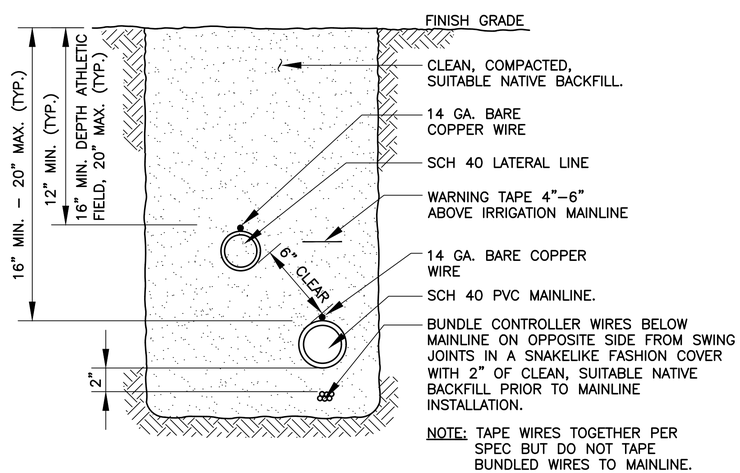

5 IRRIGATION TRENCHING
SCALE: NTS

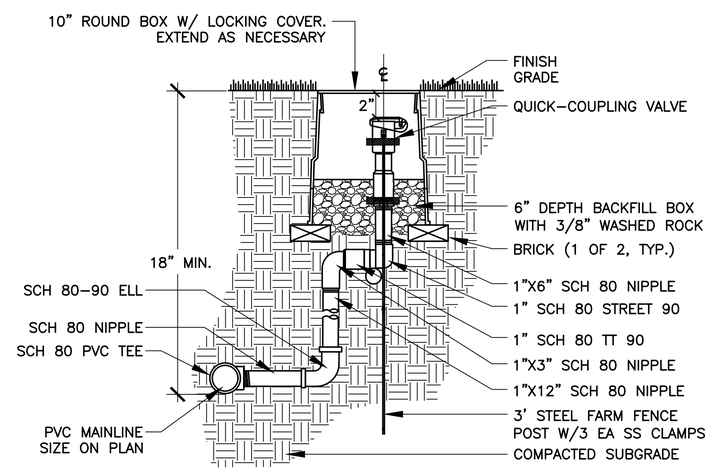

6 QUICK COUPLER VALVE
SCALE: NTS

PARTNERSHIP berger
1927 Post Alley, Ste. 2
Seattle, WA 98101
206 325 6877
bergerpartnership.com

Design Two Four/Two Six
14835 161ST COURT SE
RENTON, WA 98059-8819
ph. (425) 313-1216
cell (206) 335-7719
www.design2426.com
Landscape Architecture • Irrigation Planning • Athletic Field Design • Construction Management

Totem Lake Park Phase 1

City of Kirkland

12031 Totem Lake Way, Kirkland, WA 98034

STATE OF WASHINGTON
JASON M. ANDERSON
9936 EXP. 08/24/20
LANDSCAPE ARCHITECT

SET TYPE:
Bid Set

SET ISSUE DATE:
09/13/2019

REVISIONS:

DRAWN/CHECKED:
JA

SHEET NAME:
IRRIGATION DETAILS

SHEET NUMBER:
ID100

Berger Partnership Project Number: XXXXXXXX.XX Plotted: 09.05.2019 11:43 PM By: Jason Anderson Filename: C:\users\jason\dropbox\design 2426\jobs\734- totem lake\drawings\project submittal\xrefs\totem lake park-ph1_sheet - ip101 - irrigation plan - park.dwg

NOTES:
1. SWING JOINT ASSEMBLY SIZE DETERMINED BY HEAD INLET SIZE

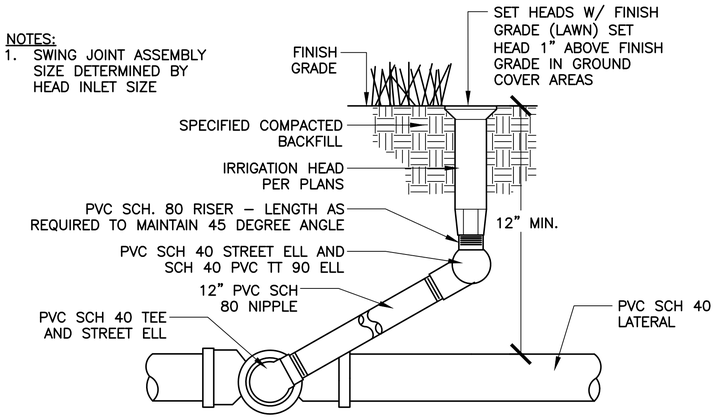

1 SPRAY HEAD
SCALE: NTS

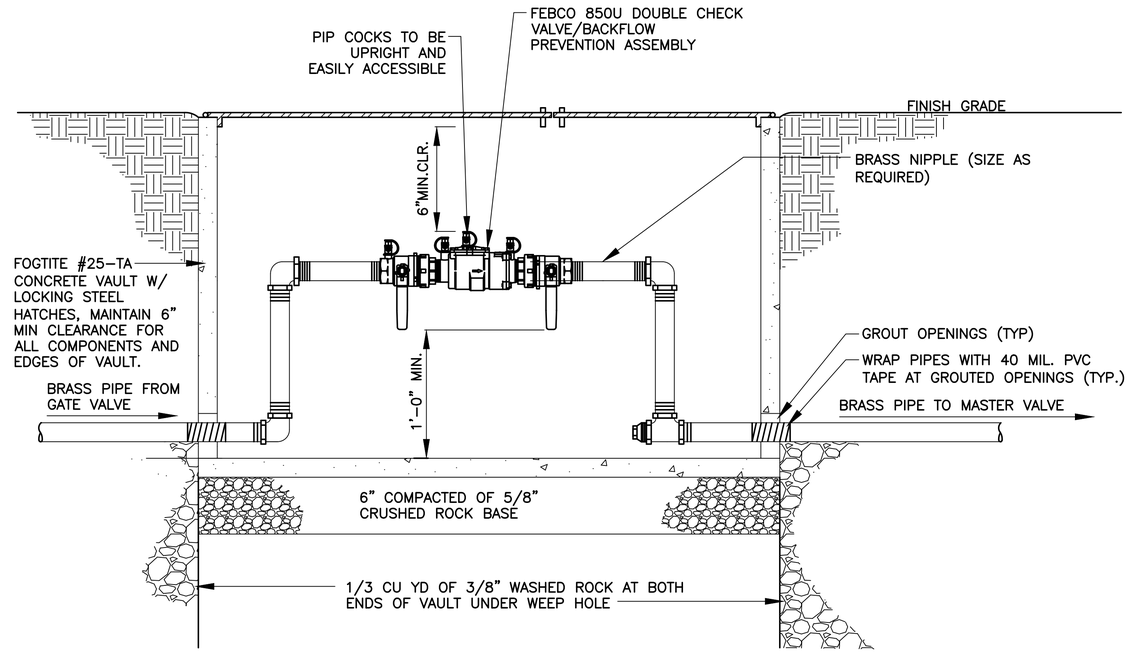

2 DOUBLE CHECK VALVE ASSEMBLY
SCALE: NTS

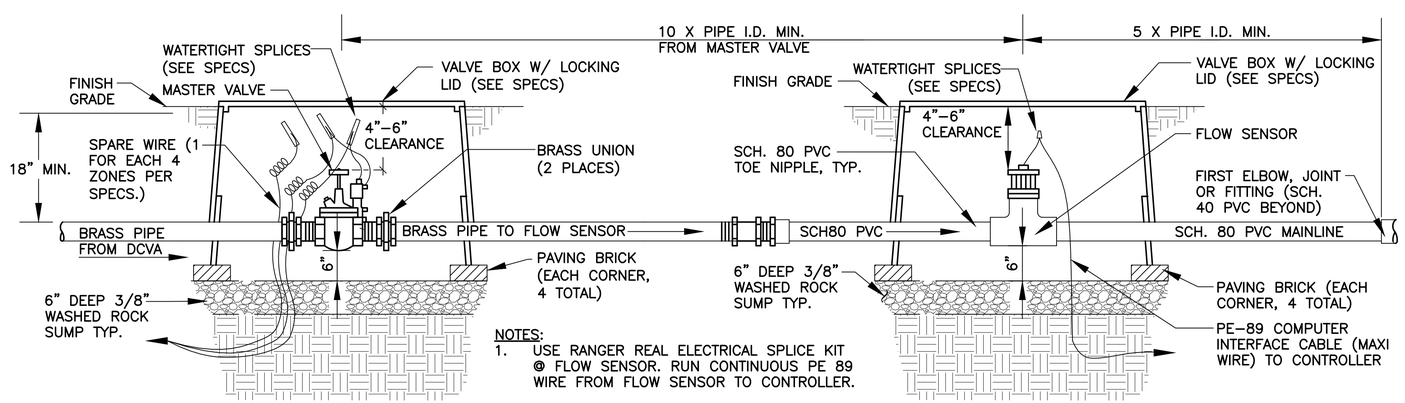

NOTES:
1. USE RANGER REAL ELECTRICAL SPLICE KIT @ FLOW SENSOR. RUN CONTINUOUS PE 89 WIRE FROM FLOW SENSOR TO CONTROLLER.
2. USE TEFLON TAPE ON ALL THREADED FITTINGS.

3 MASTER VALVE & FLOW SENSOR
SCALE: NTS

berger PARTNERSHIP
1927 Post Alley, Ste. 2
Seattle, WA 98101
206 325 6877
bergerpartnership.com

Design Two Four/Two Six
14835 161ST COURT SE
RENTON, WA 98059-8819
ph. (425) 313-2426
cell (206) 335-7719
www.design2426.com
Landscape Architecture • Irrigation Planning • Athletic Field Design • Construction Management

Totem Lake Park Phase 1
City of Kirkland
12031 Totem Lake Way, Kirkland, WA 98034

STATE OF WASHINGTON
JASON M. ANDERSON
9936 EXP. 08/24/20
LANDSCAPE ARCHITECT

SET TYPE:
Bid Set

SET ISSUE DATE:
09/13/2019

REVISIONS:

DRAWN/CHECKED:
JA

SHEET NAME:
IRRIGATION DETAILS

SHEET NUMBER:
ID101

Berger Partnership Project Number: XXXXXXXX.XX Plotted: 09.05.2019 11:43 PM By: Jason Anderson Filename: C:\users\jason\dropbox\design 2426\jobs\734- totem lake\drawings\project submittal\xrefs\totem lake park-ph1_sheet - ip101 - irrigation plan - park.dwg

BUFFER/WETLAND MITIGATION/RESTORATION & PLANTING REQUIREMENTS	
NOTE #	DESCRIPTION
1	ALL LAWN, HYDROSEEDED, AND PLANTED AREAS EXCEPT FOR WETLAND AREAS SHALL BE IRRIGATED. NO IRRIGATION IS REQUIRED IN THE WETLAND. REFER TO IRRIGATION PLANS.
3	ALL PLANTED AREAS SHOWN IN 'PARK AREA, SHEET LP101 SHALL RECEIVE IMPORT TOPSOIL. REFER TO SPECIFICATIONS FOR SOIL TYPE AND PREPARATION REQUIREMENTS. REFER TO CIVIL FOR SOIL REQUIRMEMENTS FOR STORMWATER AREAS.
4	MULCH ALL PLANTING AREAS. REFER TO SPECIFICATIONS FOR MULCH TYPE AND DEPTH.
5	ALL PLANT MATERIAL MUST BE REVIEWED IN THE FIELD, AND APPROVED BY THE LANDSCAPE ARCHITECT PRIOR TO PLANTING.
6	THE CONTRACTOR SHALL STAKE ALL TREE LOCATIONS IN THE FIELD PRIOR TO PLANTING. TREE LOCATIONS ARE SUBJECT TO MODIFICATION BY LANDSCAPE ARCHITECT.
7	ALL TREE LOCATIONS MUST BE APPROVED BY THE LANDSCAPE ARCHITECT PRIOR TO PLANTING
8	STAKE ALL DECIDUOUS TREES. REFER TO DETAIL(S).
9	GUY ALL CONIFEROUS TREES. REFER TO DETAIL(S).

BUFFER/WETLAND MITIGATION/RESTORATION & PLANTING REQUIREMENTS	
NOTE #	DESCRIPTION
10	ALL PLANTS SHAL BE LAID OUT IN THE FIELD PER THE PLANS. LAYOUT SHALL BE APPROVED BY THE LANDSCAPE ARCHITECT PRIOR TO PLANTING. IF NO SPECIFIC LAYOUT IS PROVIDED PLANTS SHALL BE LAID OUT USING TRIANGULAR SPACING AT THE DISTANCE INDICATED AND SHALL BE RANDOMLY ARRANGED SUCH THAT THE MAXIMUM NUMBER OF AN GIVEN SPECIES IN A GROUP IS 3.
11	PLANT QUANTITIES SHOWN ON PLANS TAKE PRECEDENCE OVER PLANT QUANTITIES PROVIDED IN PLANT SCHEDULE.
12	IT IS THE CONTRACTOR'S RESPONSIBILITY TO PROVIDE ADEQUATE PLANTING TO MEET SPACING REQUIREMENTS AND PLANT LAYOUT SHOWN.
13	ALL PLANTING AREA FINISH GRADES (TOP OF MULCH) SHALL BE 1/2" BELOW ADJACENT PAVED SURFACES UNLESS NOTED OR DIRECTED OTHERWISE.
14	TIMING OF PROCUREMENT, AND INSTALLATION, OF LIVESTAKES SHALL COMPLY WITH THE CRITICAL AREA PLAN AND SUPPLIER RECOMMENDATIONS.
15	SEED SOURCE MUST BE AS LOCAL AS POSSIBLE.

BUFFER/WETLAND MITIGATION/RESTORATION & PLANTING REQUIREMENTS	
NOTE #	DESCRIPTION
16	CONTAINER PLANTS MUST BE NURSERY PROPOGATED UNLESS TRANSPLANTED FROM ON-SITE AREAS APPROVED FOR DISTURBANCE.
17	EXISTING TREE PROTECTION MEASURES SHALL TAKE PRECEDENCE OVER SOIL PREPARATION AND PLANTING REQUIREMENTS. NOTIFY LANDSCAPE ARCHITECT OF ANY DISCREPANCIES IMMEDIATELY. WHERE A DISCREPANCY EXISTS, SOIL PREPARATION AND PLANTING WITHIN TREE PROTECTION MEASURES SHALL BE ONLY AS APPROVED OR DIRECTED BY THE LANDSCAPE ARCHITECT.
18	REFER TO LP101 FOR PLANTING SCHEDULE FOR PLANTING SHOWN ON 'PARK', 'TRAIL', AND BOARDWALK PLANTING SHEETS (LP101, LP102, LP103) INCLUDING BUFFER ENHANCMENT PLANTING SHOWN ON LP101.
19	REFER TO LP001 FOR PLANTING SCHEDULE FOR ADDITIONAL BUFFER ENHANCMENT/RESTORATION.
20	REFER TO LP001 FOR PLANTING SCHEUDLE FOR WETLAND ENHANCMENT.
21	REFER TO CRITICAL AREA PLAN FOR PLANTING DETAILS, AND ADDITIONAL REQUIRMENTS FOR BUFFER ENHANCEMENT, BUFFER RESTORATION, AND WETLAND ENHANCMENT AREAS SHOWN ON LP001.
22	REFER TO CRITICAL AREA PLAN FOR BUFFER RESTORATION AND WETLAND RESTORATION REQUIREMENTS.

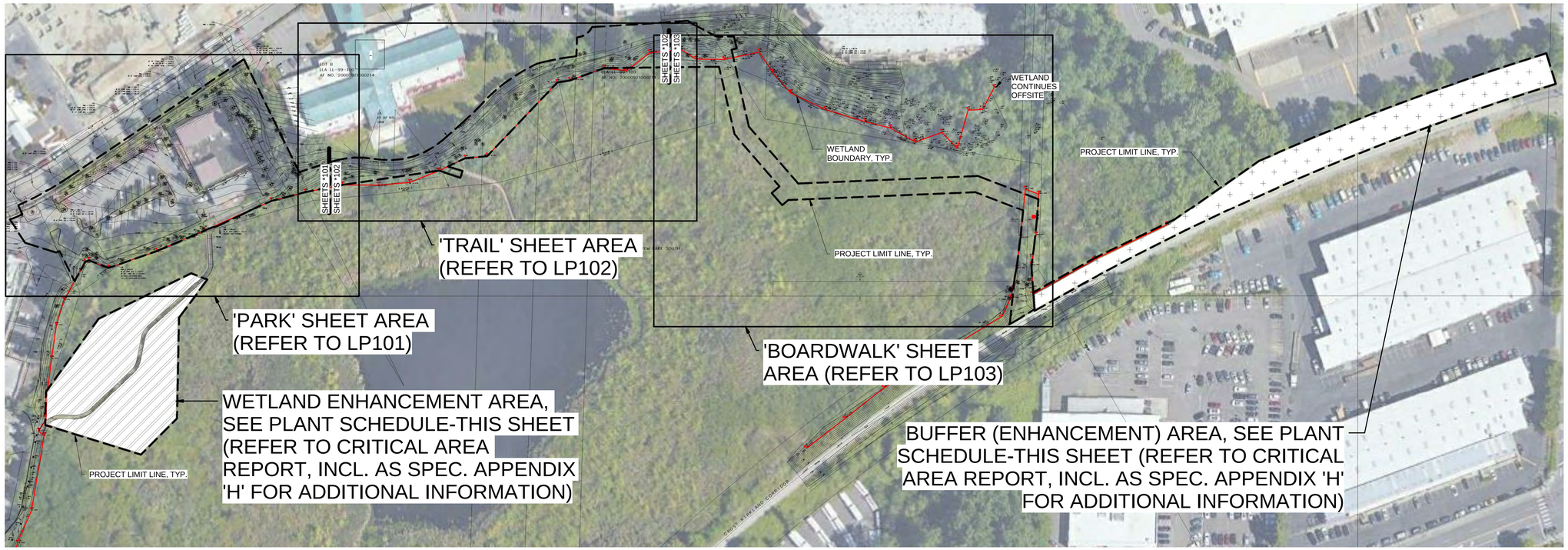

1 OVERALL PLANTING AND MITIGATION PLAN
1" = 80'-0"

NORTH

0 80' 160'
SCALE: 1"=80'-0"

PLANT SCHEDULE: WETLAND ENHANCEMENT (27,262 SF)

BOTANICAL NAME	COMMON NAME	TYPE/SIZE	SPACING	QUANTITY
CORNUS SERICEA	REDOSIER DOGWOOD	1" DIA. LIVE STAKES	5' O.C.	210
PHYSOCARPUS CAPITATUS	PACIFIC NINEBARK	1 GAL. CONTAINER	5' O.C.	210
RUBUS SPECTABILIS	SALMONBERRY	1 GAL. CONTAINER	5' O.C.	209
SALIX LUCIDA SPP. LASIANDRA	PACIFIC WILLOW	1" DIA. LIVE STAKES	5' O.C.	210
SALIX SITCHENSIS	SITKA WILLOW	1" DIA. LIVE STAKES	5' O.C.	210
SCIRPUS MICROCARPUS	SMALL FRUITED BULRUSH	1 GAL. CONTAINER	2.5' O.C.	3778
SPIRAEA DOUGLASII	DOUGLAS SPIRAEA	1 GAL. CONTAINER	5' O.C.	210

PLANT SCHEDULE: BUFFER AREAS

BOTANICAL NAME	COMMON NAME	TYPE/SIZE	SPACING	**BUFFER ENHANCEMENT** (24,094 SF) QUANTITY	**BUFFER RESTORATION** (2,404 SF) (REFER TO CRITICAL AREA REPORT FOR LOCATIONS) QUANTITY
ACER CIRCINATUM	VINE MAPLE	1 GAL. CONTAINER	6' O.C.	129	13
GAULTHERIA SHALLON	SALAL	1 GAL. CONTAINER	6' O.C.	129	13
OEMLERIA CERASIFORMIS	INDIAN PLUM	1 GAL. CONTAINER	6' O.C.	128	12
POLYSTICHUM MUNITUM	SWORD FERN	1 GAL. CONTAINER	6' O.C.	128	13
ROSA NUTKANA	NOOTKA ROSE	1 GAL. CONTAINER	6' O.C.	129	13
SYMPHORICARPOS ALBUS	SNOWBERRY	1 GAL. CONTAINER	6' O.C.	129	13

BUFFER HYDROSEED (REFER TO CRITICAL AREA REPORT FOR LOCATIONS)
APPLY 25 LBS.PER ACRE

BOTANICAL NAME	COMMON NAME	% BY WEIGHT RATE
AGROSTIS TENUIS	COLONIAL BENTGRASS	15%
FESTUCA RUBRA	RED FESCUE	20%
LOLIUM PERNENNE	PERENNIAL RYE GRASS	15%
LUPINUS POLYPHYLLUS	LARGE-LEAVED LUPINE	25%
TRIFOLIUM PRATENSE	RED CLOVER	25%

PARTNERSHIP berger
1927 Post Alley, Ste. 2
Seattle, WA 98101
206 325 6877
bergerpartnership.com

Totem Lake Park Phase 1
City of Kirkland
12031 Totem Lake Way, Kirkland, WA 98034

STATE OF WASHINGTON
ANDY MITTON
NO. 882 EXP. 6/30/2020
LANDSCAPE ARCHITECT

SET TYPE:
Bid Set

SET ISSUE DATE:
09/13/2019

REVISIONS:

Δ	DESCRIPTION	DATE

DRAWN/CHECKED:
Author / Checker

SHEET NAME:
OVERALL PLANTING & MITIGATION PLAN

SHEET NUMBER:
LP001

Berger Partnership Project Number: 20154875.02 Plotted: 9/12/2019 11:38:53 AM Filename: G:\Everyone\Christina Abbott\Revit Local\Totem Lake Park-PH1_christinea@bergerpartnership.com.rvt

TREE PLANTING SCHEDULE

sym	Count	Species	Common Name	Size and Spacing	Comments
	29	Acer circinatum	Vine maple	5 GAL, PER PLAN	3 STEM MIN.
	30	Amelanchier alnifolia	Serviceberry	6' HT. MIN.	
	6	Fagus sylvatica	European Beech	10-15' HT, 50' O.C. (OR AS SHOWN)	
	16	Malus fusca	Pacific Crabapple	5 GAL, PER PLAN	
	7	Pseudotsuga menziesii	Douglas Fir	10-12' HT. @ 18' O.C.	
	5	Quercus garryana	Garry Oak	8-10' HT. @ 18' O.C. (OR AS SHOWN)	
	20	Rhamnus purshiana	Cascara	6' HT. MIN.	
	10	Thuja plicata	Western Red Cedar	10-12' HT. @ 18' O.C.	
	123				

SHRUB PLANTING SCHEDULE

Sym	Count	Species	Common Name	Size and Spacing
	2	Arctostaphylos Columbiana 'Oregon Hybrid'	Hairy Manzanita	5 GAL @ 6' O.C.
	33	Cornus sericea	Redtwig Dogwood	1 GAL. @ 3' O.C.
	8	Holodiscus discolor	Oceanspray	2 GAL. @ 6' O.C.
	118	Mahonia nervosa	Low Oregon Grape	1 GAL. @ 3' O.C.
	31	Oemleria cerasiformis	Indian Plum - East Edge	2 GAL. @ 6' O.C.
	20	Physocarpus capitatus	Pacific Ninebark	1 GAL. @ 3' O.C.
	130	Prunus Laurocerasus 'Mt. Vernon'	Dwarf English Laurel	2 GAL @ 3' O.C.

SHRUB PLANTING SCHEDULE

Sym	Count	Species	Common Name	Size and Spacing
	9	Ribes sangenium	Red Flowering Currant	2 GAL. @ 6' O.C.
	183	Rosa Nutkana	Nootka Rose	1 GAL. @ 3' O.C.
	27	Rubus Spectabilis	Salmonberry	2 GAL. @ 6' O.C.
	11	Salix Purpurea	Blue Artic Willow	5 GAL, 6' O.C.
	162	Symphoricarpus albus	Snowberry	1 GAL. @ 3' O.C.
	20	Taxus breviolia	Pacific Yew	2 GAL. @ 6' O.C.

GROUNDCOVER PLANTING SCHEDULE

Sym	Count	Species	Common Name	Size and Spacing
	34	Athyrium Filix-Femina	Lady Fern	1 GAL. @ 3' O.C.
	135	Calamagrostis Acuitiflora 'Karl Foerster'	Feather Reed Grass 'Karl Foerster'	3 GAL, 3' O.C.
	145	Carex obnupta	Slough Sledge	1 GAL. @ 3' O.C.
	196	Deschampsia cespitosa	Pacific Hairgrass	1 GAL. @ 2' O.C.
	196	Fescue roemeri	Roemer's Fescue	1 GAL. @ 2' O.C.
	206	Fragaria chiloensis	Beach Strawberry	1 GAL. @ 3' O. C. (OR AS SHOWN)
	244	Gaultheria Shallon	Salal	1 GAL. @ 3' O.C.
	29	Iris Douglasiana	Oregon Iris	1 GAL. @ 3' O.C.
	115	Juncus Effusus	Common Rush	1 GAL. @ 3' O.C.
	131	Juncus Ensifolius	Swordleaf Rush	1 GAL. @ 3' O.C.
	18	Lonicera involucrata	Twinberry	1 GAL. @ 3' O.C.
	60	Mahonia aquifolium	Tall Oregon Grape	2 GAL. @ 6' O.C.
	31	Mimulus guttatus	Monkey Flower	1 GAL. @ 3' O.C.
	295	Pennisetum alopecuroides 'Hamelin'	Dwarf Fountain Grass	2 GAL @ 2' O.C.
	308	Polystichum Munitum	Sword Fern	1 GAL. @ 3' O.C.
	118	Scirpus microcarpus	Small Fruited Bulrush	1 GAL. @ 3' O.C.

Existing Tree Legend

- EXISTING CONIFER TREE 6" CAL. OR GREATER TO BE RETAINED
- EXISTING DECIDUOUS TREE 6" CAL. OR GREATER TO BE RETAINED
- E1 — TREE INVENTORY NUMBER (REFER TO ARBORIST REPORT for E1-E120. FOR NUMBERS E121 & HIGHER, FIELD VERIFY)

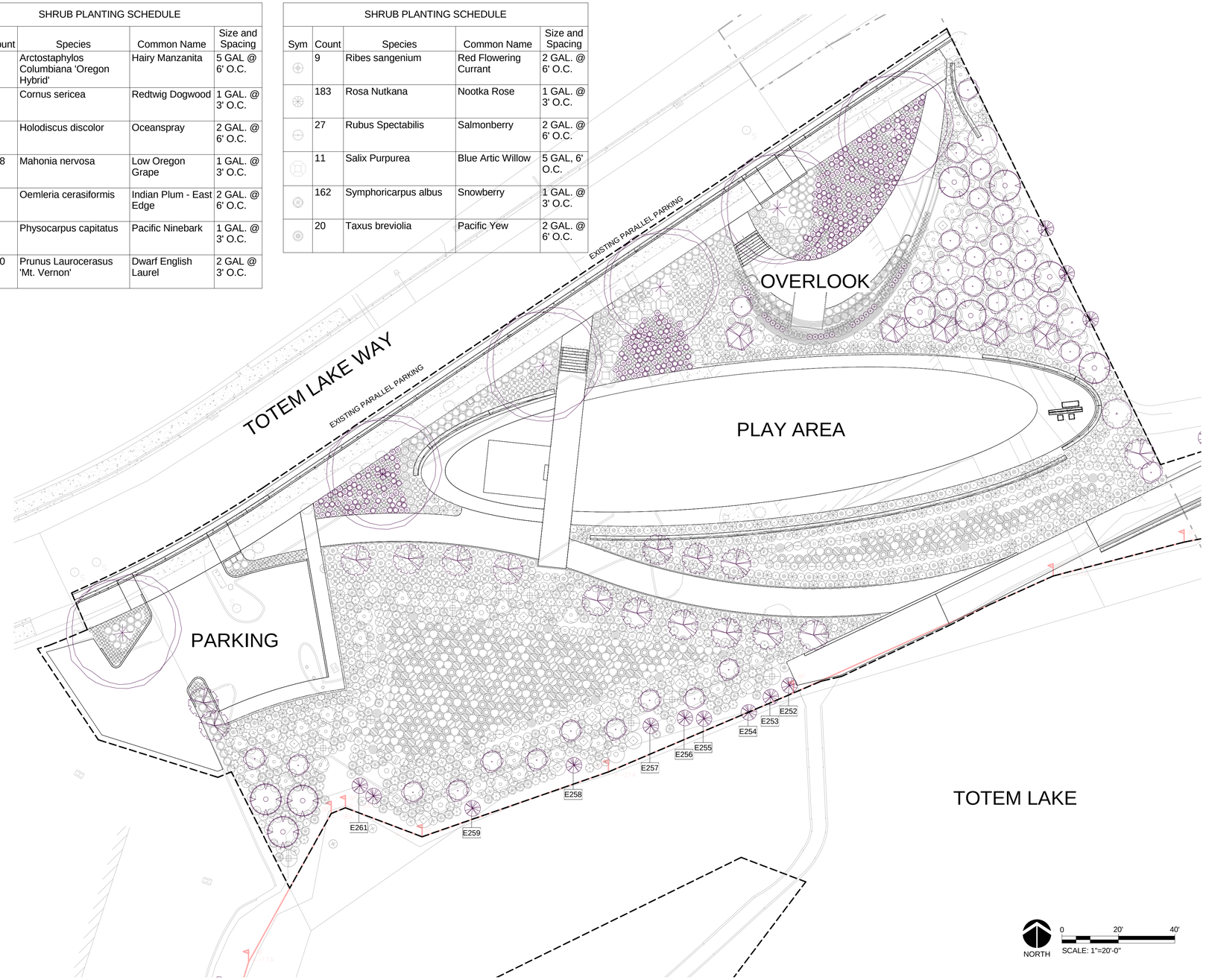

1 PLANTING PLAN - PARK
1" = 20'-0"

PARTNERSHIP berger
1927 Post Alley, Ste. 2
Seattle, WA 98101
206 325 6977
bergerpartnership.com

Totem Lake Park Phase 1
City of Kirkland
12031 Totem Lake Way, Kirkland, WA 98034

STATE OF WASHINGTON ANDY MITTON NO. 882 EXP. 6/30/2020 LANDSCAPE ARCHITECT

SET TYPE:
Bid Set

SET ISSUE DATE:
09/13/2019

REVISIONS:

Δ	DESCRIPTION	DATE

DRAWN/CHECKED:
MM / AM

SHEET NAME:
PLANTING PLAN - PARK

SHEET NUMBER:
LP101

Filename: G:\Everyone\Christine Abbott\Revit Local\Totem Lake Park-PH1_christinea@bergerpartnership.com.rvt
Plotted: 9/12/2019 11:38:57 AM
Berger Partnership Project Number: 20154875.02

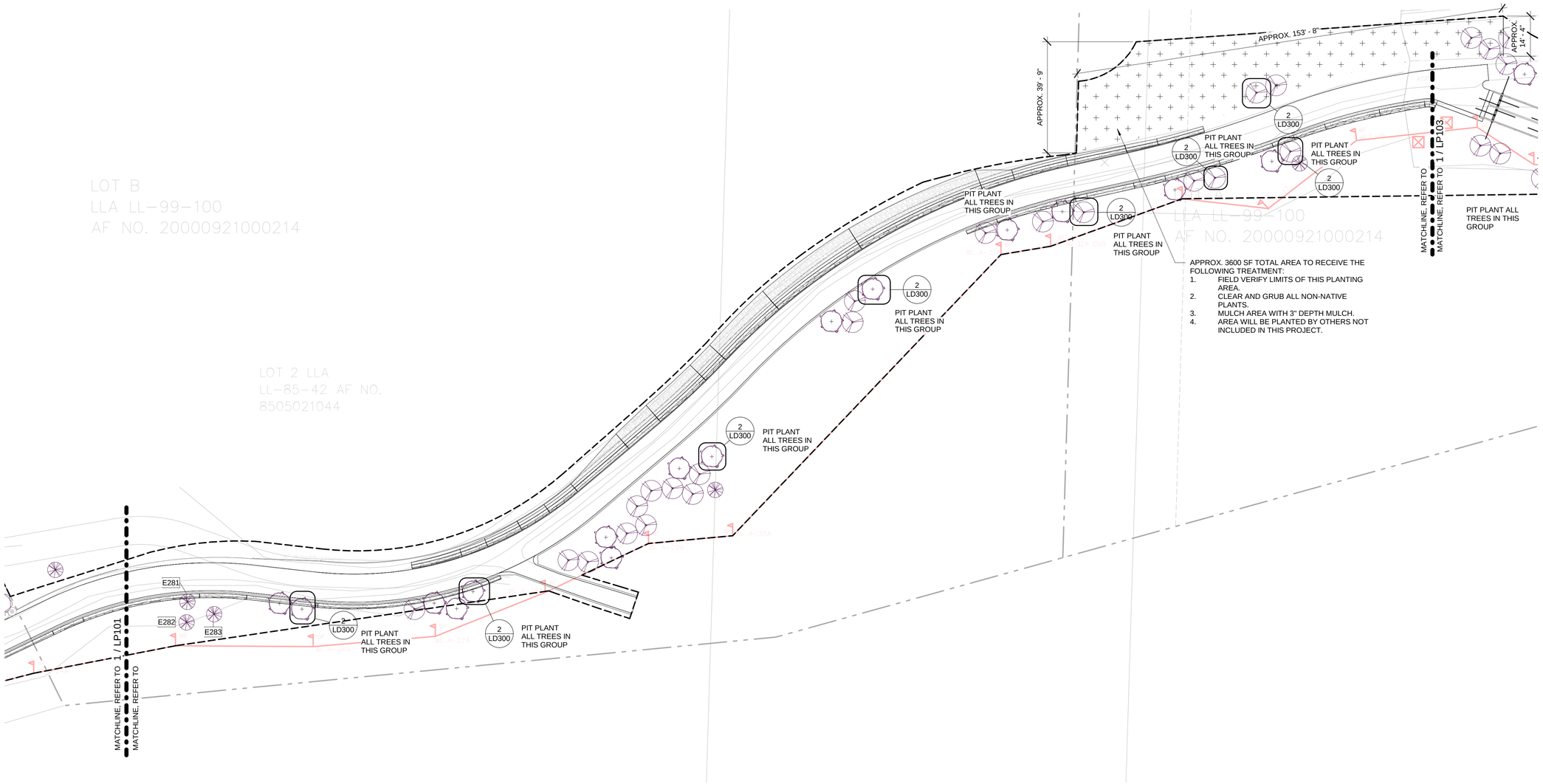

1 PLANTING PLAN - TRAIL
1" = 20'-0"

NORTH

0 20' 40'
SCALE: 1"=20'-0"

Existing Tree Legend	
	EXISTING CONIFER TREE 6" CAL. OR GREATER TO BE RETAINED
	EXISTING DECIDUOUS TREE 6" CAL. OR GREATER TO BE RETAINED
E1	TREE INVENTORY NUMBER (REFER TO ARBORIST REPORT for E1-E120. FOR NUMBERS E121 & HIGHER, FIELD VERIFY)

TREE LEGEND - TRAIL & BOARDWALK

Symbol	Species	Common Name
	Amelanchier alnifolia	Serviceberry
	Rhamnus purshiana	Cascara

berger PARTNERSHIP
1927 Post Alley, Ste. 2
Seattle, WA 98101
206 325 6877
bergerpartnership.com

Totem Lake Park Phase 1
City of Kirkland
12031 Totem Lake Way, Kirkland, WA 98034

STATE OF WASHINGTON
ANDY MITTON
NO. 882 EXP. 6/30/2020
LANDSCAPE ARCHITECT

SET TYPE:
Bid Set

SET ISSUE DATE:
09/13/2019

REVISIONS:

Δ	DESCRIPTION	DATE

DRAWN/CHECKED:
MM / AM

SHEET NAME:
PLANTING PLAN - TRAIL

SHEET NUMBER:
LP102

Berger Partnership Project Number: 20154875.02
Plotted: 9/12/2019 11:39:00 AM
Filename: G:\Everyone\Christine Abbott\Revit Local\Totem Lake Park-PH1_chrisinea@bergerpartnership.com.rvt

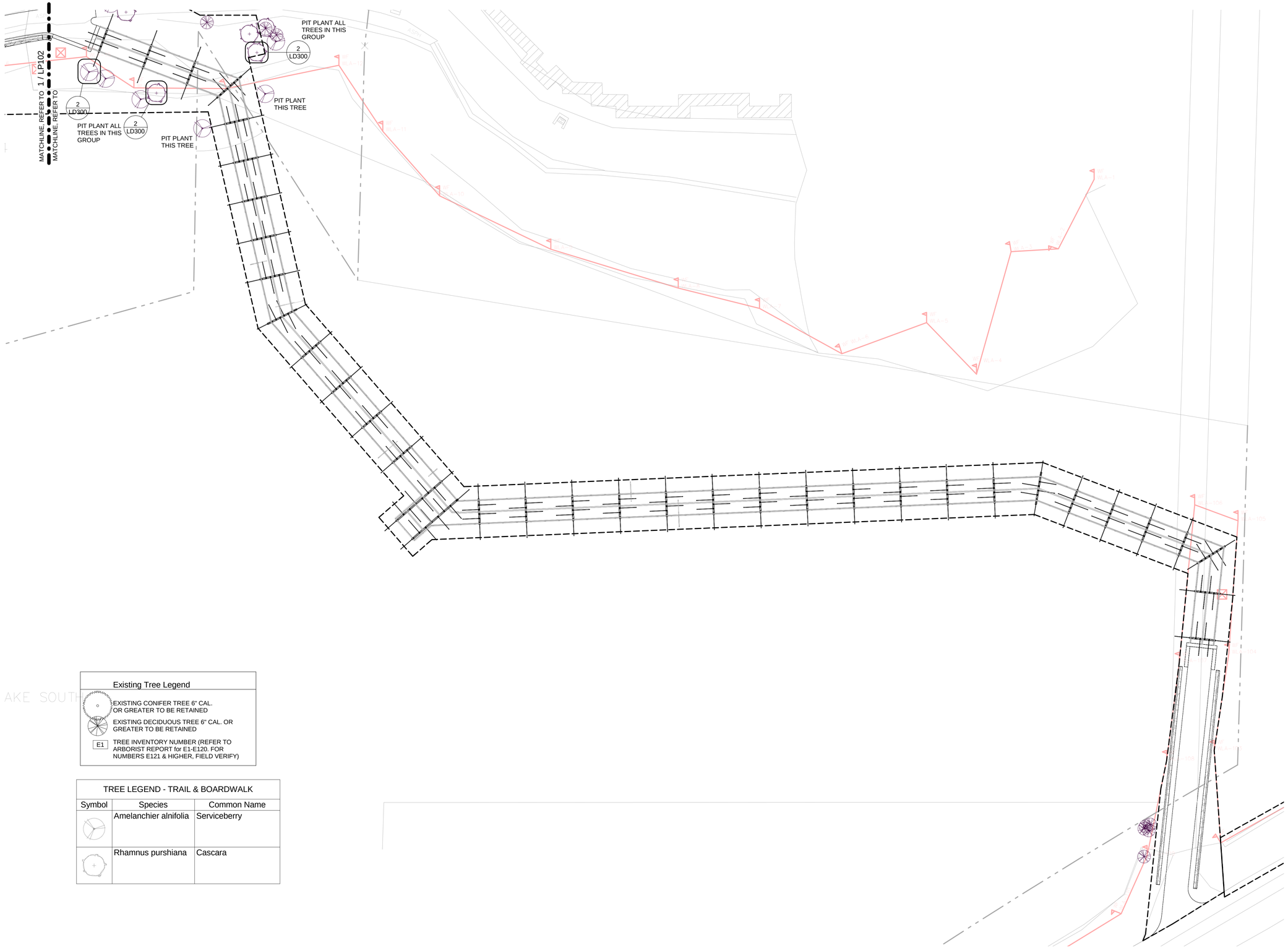

Existing Tree Legend	
	EXISTING CONIFER TREE 6" CAL. OR GREATER TO BE RETAINED
	EXISTING DECIDUOUS TREE 6" CAL. OR GREATER TO BE RETAINED
E1	TREE INVENTORY NUMBER (REFER TO ARBORIST REPORT for E1-E120. FOR NUMBERS E121 & HIGHER, FIELD VERIFY)

TREE LEGEND - TRAIL & BOARDWALK

Symbol	Species	Common Name
	Amelanchier alnifolia	Serviceberry
	Rhamnus purshiana	Cascara

1 PLANTING PLAN - BOARDWALK
1" = 20'-0"

PARTNERSHIP berger
1927 Post Alley, Ste. 2
Seattle, WA 98101
206 325 6977
bergerpartnership.com

Totem Lake Park Phase 1

City of Kirkland

12031 Totem Lake Way, Kirkland, WA 98034

STATE OF WASHINGTON
ANDY MITTON
NO. 882 EXP. 6/30/2020
LANDSCAPE ARCHITECT

SET TYPE:
Bid Set

SET ISSUE DATE:
09/13/2019

REVISIONS:

Δ	DESCRIPTION	DATE

DRAWN/CHECKED:
MM / AM

SHEET NAME:
PLANTING PLAN - BOARDWALK

SHEET NUMBER:
LP103

Berger Partnership Project Number: 20154875.02
Plotted: 9/12/2019 11:39:02 AM
Filename: G:\Everyone\Christine Abbott\Revit Local\Totem Lake Park-PH1_christinea@bergerpartnership.com.rvt

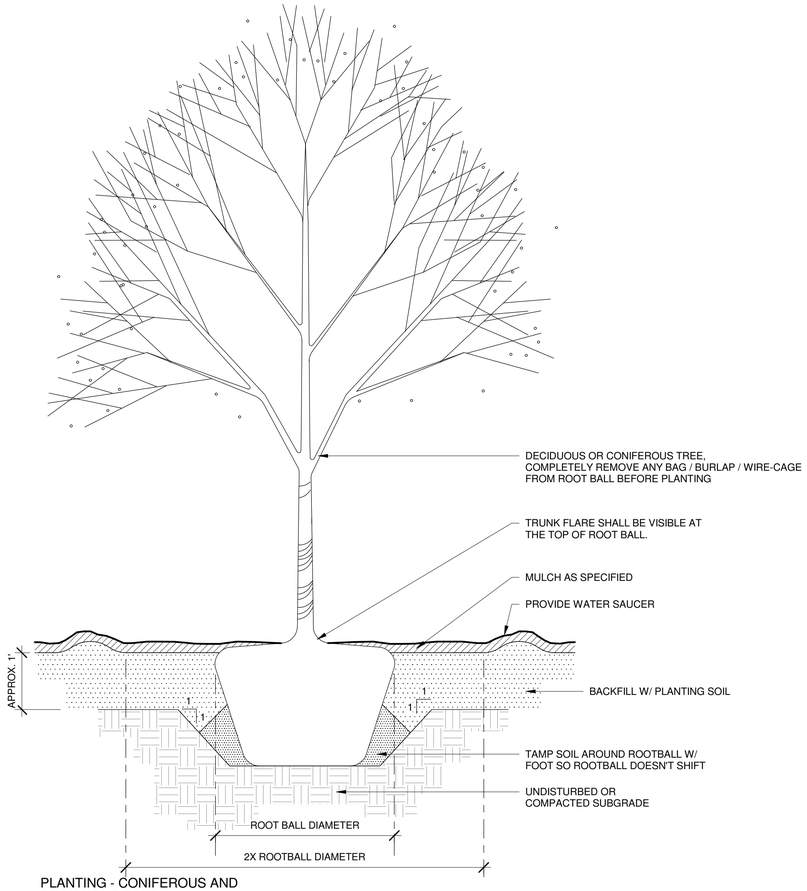

1 PLANTING - CONIFEROUS AND DECIDUOUS TREE
3/4" = 1'-0"

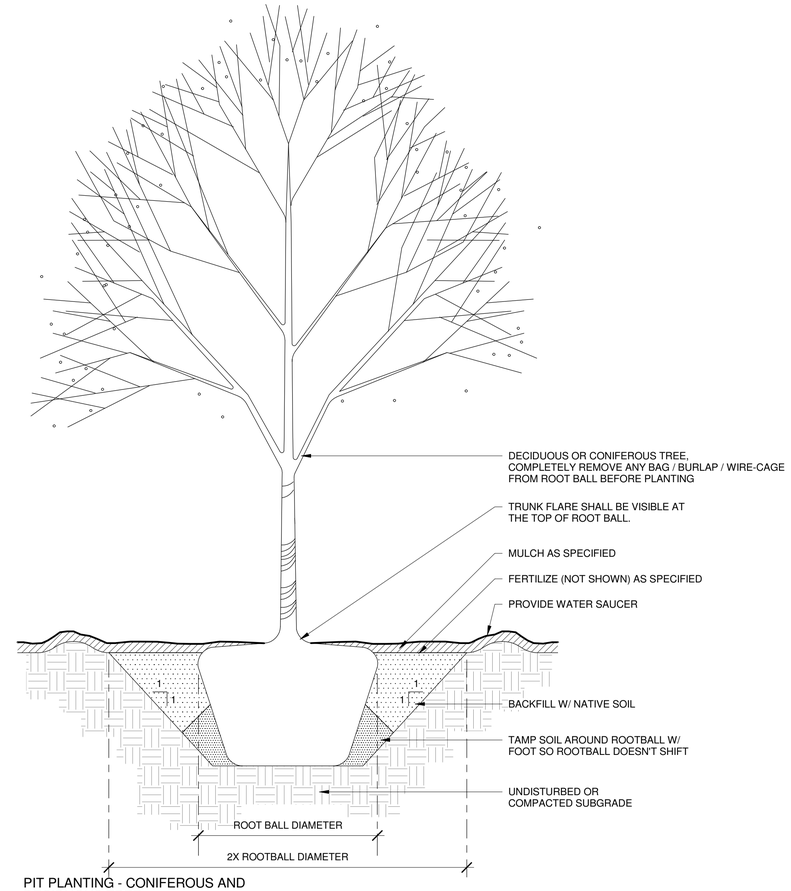

2 PIT PLANTING - CONIFEROUS AND DECIDUOUS TREE
3/4" = 1'-0"

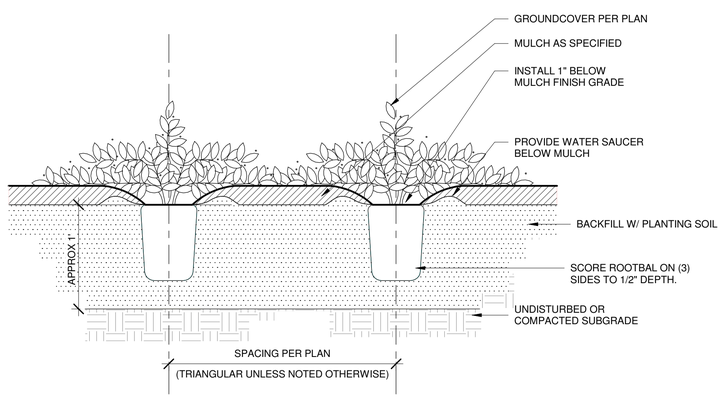

3 PLANTING - GROUNDCOVER
1 1/2" = 1'-0"

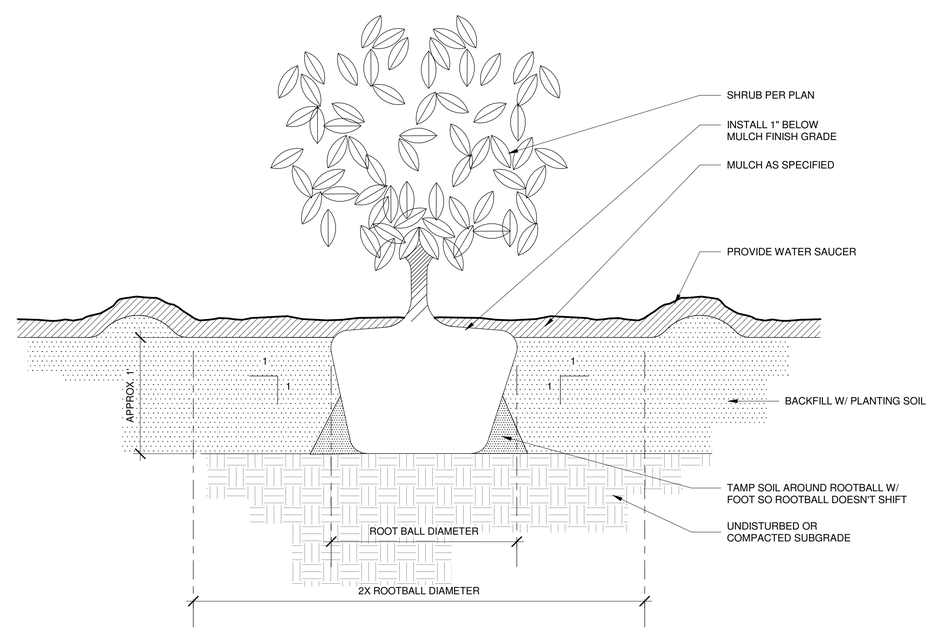

4 PLANTING - SHRUB
1 1/2" = 1'-0"

berger PARTNERSHIP
1927 Post Alley, Ste. 2
Seattle, WA 98101
206 325 6977
bergerpartnership.com

Totem Lake Park Phase 1
City of Kirkland
12031 Totem Lake Way, Kirkland, WA 98034

STATE OF WASHINGTON
ANDY MITTON
NO. 882 EXP. 6/30/2020
LANDSCAPE ARCHITECT

SET TYPE:
Bid Set

SET ISSUE DATE:
09/13/2019

REVISIONS:

Δ	DESCRIPTION	DATE

DRAWN/CHECKED:
MM / AM

SHEET NAME:
PLANTING DETAILS

SHEET NUMBER:
LD300

Berger Partnership Project Number: 20154875.02
Plotted: 9/12/2019 11:36:44 AM
Filename: G:\Everyone\Christine Abbott\Revit Local\Totem Lake Park-PH1_christinea@bergerpartnership.com.rvt

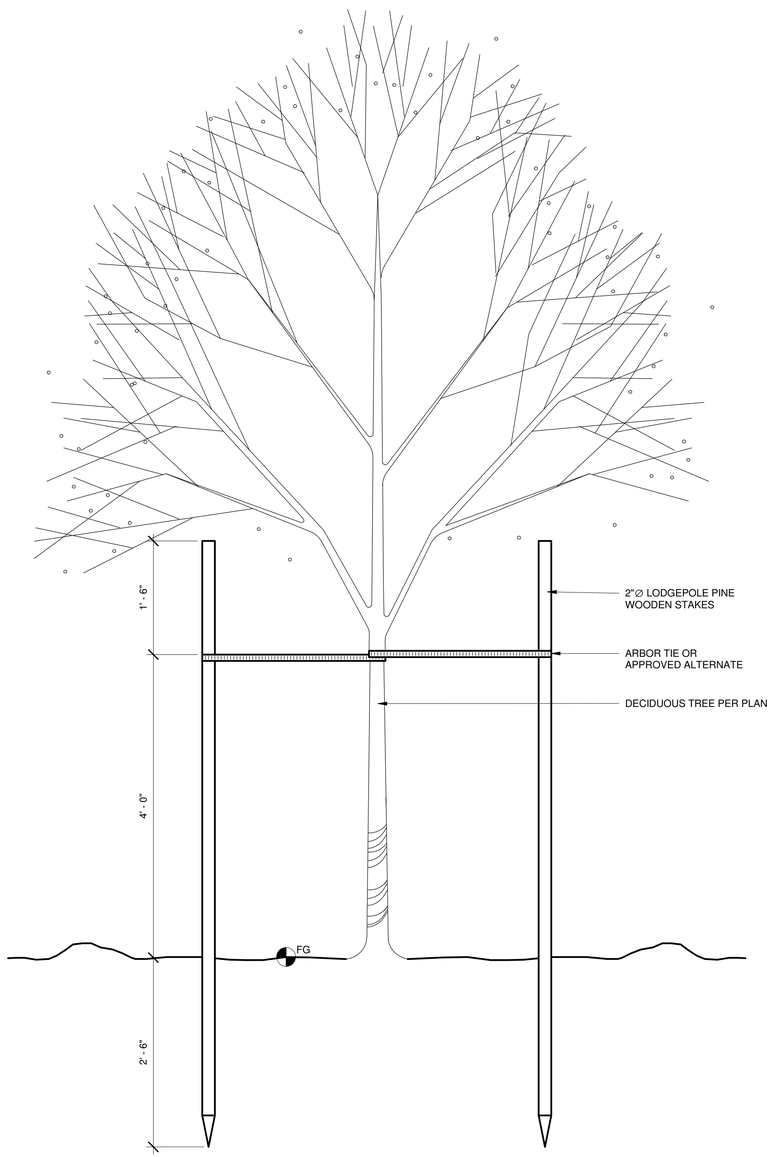

1 TREE STAKING - DECIDUOUS
1" = 1'-0"

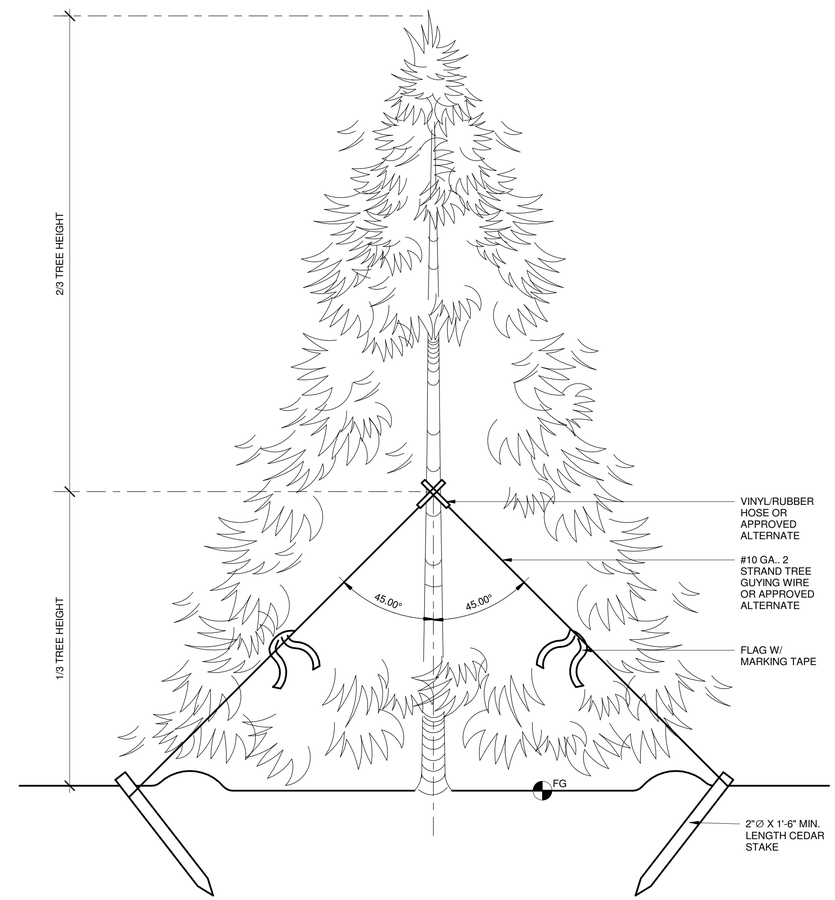

2 TREE GUYING - CONIFER
1" = 1'-0"

berger PARTNERSHIP
1927 Post Alley, Ste. 2
Seattle, WA 98101
206 325 6977
bergerpartnership.com

Totem Lake Park Phase 1

City of Kirkland

12031 Totem Lake Way, Kirkland, WA 98034

STATE OF WASHINGTON
ANDY MITTON
NO. 882 EXP. 6/30/2020
LANDSCAPE ARCHITECT

SET TYPE:
Bid Set

SET ISSUE DATE:
09/13/2019

REVISIONS:

Δ	DESCRIPTION	DATE

DRAWN/CHECKED:
MM / AM

SHEET NAME:
PLANTING DETAILS

SHEET NUMBER:
LD301

Berger Partnership Project Number: 2015/6875.02
Plotted: 9/12/2019 11:36:45 AM
Filename: G:\Everyone\Christine Abbott\Revit Local\Totem Lake Park-PH1_christinea@bergerpartnership.com.rvt